IBM

System x3650 M5
Type 5462

# Installation and Service Guide

System x3650 M5
Type 5462

# Installation and Service Guide

**Note**

Before using this information and the product it supports, read the general information in Appendix D, "Getting help and technical assistance," on page 973, "Notices" on page 977, the *Warranty Information* document, and the *Safety Information* and *Environmental Notices and User Guide* documents on the IBM *Documentation* CD.

**First Edition (October 2014)**

**© Copyright IBM Corporation 2014.**
US Government Users Restricted Rights – Use, duplication or disclosure restricted by GSA ADP Schedule Contract with IBM Corp.

# Contents


**Safety . . . . . vii**
Safety statements . . . . . ix

**Chapter 1. The System x3650 M5 server 1**
The IBM Documentation CD . . . . . 5
Hardware and software requirements . . . . . 5
The IBM Documentation CD . . . . . 5
Related documentation . . . . . 6
Notices and statements in this document . . . . . 7
Server features and specifications . . . . . 8
What your server offers . . . . . 13
IBM Systems Director . . . . . 16
Reliability, availability, and serviceability . . . . 17
Server controls, LEDs, and power . . . . . 18
Front view. . . . . 19
Operator information panel . . . . . 21
LCD system information display panel . . . . 22
Rear view . . . . . 24
PCI riser-card adapter expansion slot locations 26
Server components . . . . . 27
System-board internal connectors . . . . . 29
System-board external connectors . . . . . 29
System-board switches, jumpers, and buttons 30
System-board LEDs. . . . . 33
Riser-card adapter expansion slot connectors 33
Riser-card assembly LEDs . . . . . 35
2.5-inch/3.5-inch simple-swap/hot-swap hard disk drive backplate assemblies and backplanes . . . . . 36
Server power features . . . . . 40
Turning on the server . . . . . 40
Turning off the server . . . . . 40

**Chapter 2. Configuration information and instructions. . . . . 43**
Updating the firmware . . . . . 43
Configuring the server. . . . . 44
Using the ServerGuide Setup and Installation CD 46
ServerGuide features . . . . . 47
Setup and configuration overview . . . . . 47
Typical operating-system installation . . . . 47
Installing your operating system without using ServerGuide . . . . . 48
Using the Setup utility. . . . . 48
Starting the Setup utility . . . . . 48
Setup utility menu choices . . . . . 49
Passwords. . . . . 53
Using the Boot Manager . . . . . 55
Starting the backup server firmware . . . . . 55
The Update*Xpress* System Pack Installer . . . . 56
Using the integrated management module . . . 56
Using the remote presence and blue-screen capture features . . . . . 57
Obtaining the IMM host name . . . . . 58
Obtaining the IP address for the IMM . . . 58
Logging on to the web interface . . . . . 59
Using the embedded hypervisor . . . . . 60
Configuring the Ethernet controller . . . . . 61
Enabling Features on Demand Ethernet software 61
Enabling Features on Demand RAID software . . 61
Configuring RAID arrays. . . . . 61
IBM Advanced Settings Utility program . . . . 62
Updating IBM Systems Director . . . . . 62
Installing a newer version . . . . . 63
Installing updates with your management server is connected to the Internet . . . . . 63
Installing updates with your management server is not connected to the Internet . . . 63
Updating the Universal Unique Identifier (UUID) 64
Updating the DMI/SMBIOS data . . . . . 66

**Chapter 3. Troubleshooting . . . . . 71**
Start here . . . . . 71
Diagnosing a problem . . . . . 71
Undocumented problems. . . . . 73
Service bulletins . . . . . 74
Checkout procedure . . . . . 74
About the checkout procedure . . . . . 74
Performing the checkout procedure . . . . . 75
Diagnostic tools . . . . . 76
Power-supply LEDs . . . . . 78
AC power-supply LEDs . . . . . 78
System pulse LEDs . . . . . 80
PCI riser-card LEDs . . . . . 80
Event logs . . . . . 81
Viewing event logs through the Setup utility 82
Viewing event logs without restarting the server . . . . . 82
Clearing the event logs . . . . . 83
POST . . . . . 84
IBM Dynamic System Analysis . . . . . 84
DSA editions . . . . . 85
Running the DSA Preboot diagnostic programs . . . . . 86
Diagnostic text messages . . . . . 87
Viewing the test log results and transferring the DSA collection . . . . . 87
Automated service request (call home) . . . . . 87
IBM Electronic Service Agent . . . . . 88
Error messages . . . . . 88
Troubleshooting by symptom . . . . . 88
CD/DVD drive problems. . . . . 89
General problems . . . . . 90
Hard disk drive problems . . . . . 90
Hypervisor problems . . . . . 92
Intermittent problems . . . . . 93
Keyboard, mouse, or USB-device problems . . . 93
Memory problems . . . . . 94
Microprocessor problems . . . . . 96
Monitor and video problems . . . . . 97


© Copyright IBM Corp. 2014

Network connection problems . . . . . 99
Optional-device problems . . . . . 99
Power problems . . . . . 100
Serial-device problems . . . . . 109
ServerGuide problems . . . . . 109
Software problems. . . . . 110
Universal Serial Bus (USB) port problems . . . 111
Video problems. . . . . 111
Solving power problems. . . . . 111
Solving Ethernet controller problems . . . . . 114
Solving undetermined problems . . . . . 115
Problem determination tips. . . . . 116
Recovering the server firmware (UEFI update failure) . . . . . 117
In-band manual recovery method. . . . . 117
In-band automated boot recovery method . . . 119
Out-of-band method . . . . . 119
Automated boot recovery (ABR) . . . . . 119
Nx-boot failure. . . . . 120

**Chapter 4. Parts listing, System x3650 M5 Type 5462 . . . . . 121**
Replaceable server components . . . . . 121
Structural parts. . . . . 128
Power cords. . . . . 129

**Chapter 5. Removing and replacing components . . . . . 131**
Returning a device or component . . . . . 131
Internal cable routing and connectors . . . . . 131
General cable routing connections . . . . . 132
Cabling VGA power connector . . . . . 132
2.5-inch hard disk drive cable connection . . . 133
8x2.5-inch drive model . . . . . 133
16x2.5-inch drive model . . . . . 135
24x2.5-inch drive model . . . . . 138
3.5-inch hard disk drive cable connection . . . 142
8x3.5-inch drive model . . . . . 142
12x3.5-inch drive model . . . . . 144
Removing and replacing server components . . . 145
Removing and replacing structural parts . . . 145
Removing the top cover . . . . . 146
Replacing the top cover . . . . . 147
Removing and replacing Tier 1 CRUs . . . . 148
Removing the air baffle . . . . . 148
Replacing the air baffle . . . . . 149
Removing the power paddle module . . . 150
Replacing the power paddle module . . . 151
Removing the front USB assembly . . . . 152
Replacing the front USB assembly . . . . 152
Removing a hot-swap hard disk drive . . . 154
Replacing a hot-swap hard disk drive . . . 155
Removing a simple-swap hard disk drive 157
Replacing a simple-swap hard disk drive . . 158
Removing the optical drive cable. . . . . 160
Replacing the optical drive cable . . . . . 161
Removing an optical drive . . . . . 163
Replacing an optical drive . . . . . 164
Removing a memory module . . . . . 166
Installing a memory module . . . . . 167
Removing the fan cage assembly . . . . . 172
Replacing the fan cage assembly . . . . . 173
Removing a hot-swap fan . . . . . 174
Replacing a hot-swap fan . . . . . 175
Removing the media cage . . . . . 176
Replacing the media cage . . . . . 178
Removing a riser-card assembly . . . . . 180
Replacing a riser-card assembly . . . . . 181
Removing the dedicated slotless RAID controller. . . . . 183
Replacing the dedicated slotless RAID controller. . . . . 184
Removing an adapter. . . . . 185
Replacing an adapter. . . . . 190
Removing a RAID adapter battery/flash power module . . . . . 198
Replacing a RAID adapter battery/flash power module . . . . . 199
Removing the rear two hard-disk-drive kit 200
Replacing the rear two hard-disk-drive kit 202
Removing an EIA assembly . . . . . 206
Replacing an EIA assembly. . . . . 216
Removing a power supply . . . . . 228
Replacing a power supply . . . . . 229
Removing the 2.5-inch simple-swap backplate assembly/hot-swap hard disk drive backplane . . . . . 232
Replacing the 2.5-inch simple-swap backplate assembly/hot-swap hard disk drive backplane . . . . . 233
Removing the 3.5-inch simple-swap backplate assembly/hot-swap hard disk drive backplane . . . . . 235
Replacing the 3.5-inch simple-swap backplate assembly/hot-swap hard disk drive backplane . . . . . 237
Removing a USB embedded hypervisor flash device. . . . . 239
Replacing a USB embedded hypervisor flash device. . . . . 240
Removing the system battery . . . . . 241
Replacing the system battery . . . . . 243
Removing the LCD system information display panel . . . . . 245
Replacing the LCD system information display panel . . . . . 248
Removing the operator information panel assembly . . . . . 254
Replacing the operator information panel assembly . . . . . 255
Removing the security bezel . . . . . 257
Replacing the security bezel . . . . . 257
Removing and replacing Tier 2 CRUs . . . . 258
Removing a microprocessor and heat sink 258
Replacing a microprocessor and heat sink 264
Removing the heat-sink retention module 274
Replacing the heat-sink retention module . . 275
Removing the system board . . . . . 276
Replacing the system board . . . . . 279
Installing optional devices . . . . . 282
Installation guidelines . . . . . 283

Installing a 8x 2.5-inch simple-swap HDD ServeRAID assembly kit . . . . . 286
Installing a 8x 3.5-inch simple-swap HDD ServeRAID assembly kit . . . . . 289
Installing a 8x 2.5-inch hot-swap HDD assembly kit . . . . . 291
Installing a 8x 2.5-inch hot-swap HDD assembly with expander kit . . . . . 297
Updating the server configuration . . . . 302
Instructions for IBM Business Partners . . . 303
How to send DSA data to IBM . . . . . 303

**Appendix A. Integrated management module II (IMM2) error messages . . . 305**
IMM Events that automatically notify Support . . 306

**Appendix B. UEFI/POST diagnostic codes . . . . . 817**

**Appendix C. DSA diagnostic test results . . . . . 837**
DSA Broadcom network test results . . . . . 837
DSA Brocade test results. . . . . 846
DSA checkpoint panel test results . . . . . 854
DSA CPU stress test results. . . . . 855
DSA Emulex adapter test results . . . . . 858
DSA EXA port ping test results . . . . . 861
DSA hard drive test results . . . . . 863
DSA Intel network test results . . . . . 865
DSA LSI hard drive test results . . . . . 870
DSA Mellanox adapter test results . . . . . 871
DSA memory isolation test results . . . . . 874
DSA memory stress test results . . . . . 944
DSA Nvidia GPU test results . . . . . 947
DSA optical drive test results . . . . . 953
DSA system management test results . . . . . 957
DSA tape drive test results . . . . . 967

**Appendix D. Getting help and technical assistance . . . . . 973**
Before you call . . . . . 973
Using the documentation . . . . . 974
Getting help and information from the World Wide Web . . . . . 974
How to send DSA data to IBM . . . . . 974
Creating a personalized support web page . . . 975
Software service and support . . . . . 975
Hardware service and support . . . . . 975
IBM Taiwan product service . . . . . 975

**Notices . . . . . 977**
Trademarks . . . . . 978
Important notes . . . . . 978
Particulate contamination . . . . . 979
Documentation format . . . . . 980
Telecommunication regulatory statement . . . . 980
Electronic emission notices . . . . . 981
Federal Communications Commission (FCC) statement. . . . . 981
Industry Canada Class A emission compliance statement. . . . . 981
Avis de conformité à la réglementation d'Industrie Canada . . . . . 981
Australia and New Zealand Class A statement 981
European Union EMC Directive conformance statement. . . . . 982
Germany Class A statement . . . . . 982
Japan VCCI Class A statement. . . . . 983
Japan Electronics and Information Technology Industries Association (JEITA) statement . . . 984
Korea Communications Commission (KCC) statement. . . . . 984
Russia Electromagnetic Interference (EMI) Class A statement . . . . . 984
People's Republic of China Class A electronic emission statement . . . . . 984
Taiwan Class A compliance statement . . . . 985

**Index . . . . . 987**

# Safety

Before installing this product, read the Safety Information.

قبل تركيب هذا المنتج، يجب قراءة الملاحظات الآمنية

Antes de instalar este produto, leia as Informações de Segurança.

在安装本产品之前，请仔细阅读 Safety Information
(安全信息)。

安裝本產品之前，請先閱讀「安全資訊」。

Prije instalacije ovog produkta obavezno pročitajte Sigurnosne Upute.

Před instalací tohoto produktu si přečtěte příručku bezpečnostních instrukcí.

Læs sikkerhedsforskrifterne, før du installerer dette produkt.

Lees voordat u dit product installeert eerst de veiligheidsvoorschriften.

Ennen kuin asennat tämän tuotteen, lue turvaohjeet kohdasta Safety Information.

Avant d'installer ce produit, lisez les consignes de sécurité.

Vor der Installation dieses Produkts die Sicherheitshinweise lesen.

Πριν εγκαταστήσετε το προϊόν αυτό, διαβάστε τις πληροφορίες ασφάλειας
(safety information).

לפני שתתקינו מוצר זה, קראו את הוראות הבטיחות.

A termék telepítése előtt olvassa el a Biztonsági előírásokat!

Prima di installare questo prodotto, leggere le Informazioni sulla Sicurezza.

製品の設置の前に、安全情報をお読みください。

본 제품을 설치하기 전에 안전 정보를 읽으십시오.

Пред да се инсталира овој продукт, прочитајте информацијата за безбедност.

© Copyright IBM Corp. 2014

ལྷན།
རྒྱལ་ཁབ་ཀུན་ནས།
ཡལ་ཆགས།
ཁ་ཤས།
ཀུན།
ནས།
ཁ་ཤས།
ཡལ་ཆགས།
ཀུན།
ནས།

Les sikkerhetsinformasjonen (Safety Information) før du installerer dette produktet.

Przed zainstalowaniem tego produktu, należy zapoznać się
z książką "Informacje dotyczące bezpieczeństwa" (Safety Information).

Antes de instalar este produto, leia as Informações sobre Segurança.

Перед установкой продукта прочтите инструкции по
технике безопасности.

Pred inštaláciou tohto zariadenia si pečítaje Bezpečnostné predpisy.

Pred namestitvijo tega proizvoda preberite Varnostne informacije.

Antes de instalar este producto, lea la información de seguridad.

Läs säkerhetsinformationen innan du installerar den här produkten.

ཐོན་རྫས་འདི་བདེ་སྒྲིང་མ་བྱས་གོང་། ཁྱོད་ཀྱི་ཡིད་གཟབ་
བྱ་འདྲ་མིན་ཡོད་པའི་འོད་སྟེར་བཤད་དགོས།

Bu ürünü kurmadan önce güvenlik bilgilerini okuyun.

مەزكۇر مەھسۇلاتنى ئورنىتىشتىن بۇرۇن بىخەتەرلىك ئۇچۇرلىرىنى ئوقۇپ چىقىڭ.

Youq mwngz yungh canjbinj neix gaxgonq, itdingh aeu doeg aen
canjbinj soengq cungj vahgangj ancien siusik.

## Safety statements

These statements provide the caution and danger information that is used in this documentation.

**Important:**

Each caution and danger statement in this documentation is labeled with a number. This number is used to cross reference an English-language caution or danger statement with translated versions of the caution or danger statement in the *Safety Information* document.

For example, if a caution statement is labeled `Statement 1`, translations for that caution statement are in the *Safety Information* document under `Statement 1`.

Be sure to read all caution and danger statements in this documentation before you perform the procedures. Read any additional safety information that comes with your system or optional device before you install the device.

### Statement 1

**DANGER**

**Electrical current from power, telephone, and communication cables is hazardous.**

**To avoid a shock hazard:**

- **Do not connect or disconnect any cables or perform installation, maintenance, or reconfiguration of this product during an electrical storm.**
- **Connect all power cords to a properly wired and grounded electrical outlet.**
- **Connect to properly wired outlets any equipment that will be attached to this product.**
- **When possible, use one hand only to connect or disconnect signal cables.**
- **Never turn on any equipment when there is evidence of fire, water, or structural damage.**
- **Disconnect the attached power cords, telecommunications systems, networks, and modems before you open the device covers, unless instructed otherwise in the installation and configuration procedures.**
- **Connect and disconnect cables as described in the following table when installing, moving, or opening covers on this product or attached devices.**

| To Connect: | To Disconnect: |
|---|---|
| 1. Turn everything OFF. | 1. Turn everything OFF. |
| 2. First, attach all cables to devices. | 2. First, remove power cords from outlet. |
| 3. Attach signal cables to connectors. | 3. Remove signal cables from connectors. |
| 4. Attach power cords to outlet. | 4. Remove all cables from devices. |
| 5. Turn device ON. | |

## Statement 2

**CAUTION:**
**When replacing the lithium battery, use only IBM® Part Number 33F8354 or an equivalent type battery recommended by the manufacturer. If your system has a module containing a lithium battery, replace it only with the same module type made by the same manufacturer. The battery contains lithium and can explode if not properly used, handled, or disposed of.**

*Do not:*

- **Throw or immerse into water**
- **Heat to more than 100°C (212°F)**
- **Repair or disassemble**

**Dispose of the battery as required by local ordinances or regulations.**

## Statement 3

**CAUTION:**
**When laser products (such as CD-ROMs, DVD drives, fiber optic devices, or transmitters) are installed, note the following:**

- **Do not remove the covers. Removing the covers of the laser product could result in exposure to hazardous laser radiation. There are no serviceable parts inside the device.**
- **Use of controls or adjustments or performance of procedures other than those specified herein might result in hazardous radiation exposure.**

**DANGER**

**Some laser products contain an embedded Class 3A or Class 3B laser diode. Note the following.**

**Laser radiation when open. Do not stare into the beam, do not view directly with optical instruments, and avoid direct exposure to the beam.**

Class 1 Laser Product
Laser Klasse 1
Laser Klass 1
Luokan 1 Laserlaite
Appareil À Laser de Classe 1

## Statement 4

**CAUTION:**
**Use safe practices when lifting.**

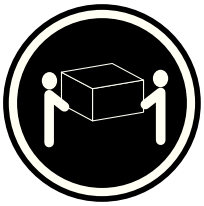

≥ 18 kg (39.7 lb)

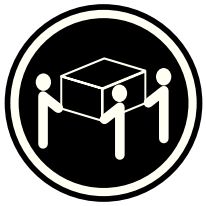

≥ 32 kg (70.5 lb)

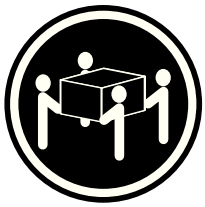

≥ 55 kg (121.2 lb)

## Statement 5

**CAUTION:**
**The power control button on the device and the power switch on the power supply do not turn off the electrical current supplied to the device. The device also might have more than one power cord. To remove all electrical current from the device, ensure that all power cords are disconnected from the power source.**

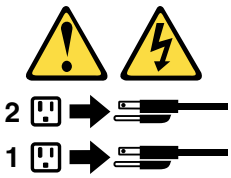

## Statement 6

**CAUTION:**
**If you install a strain-relief bracket option over the end of the power cord that is connected to the device, you must connect the other end of the power cord to an easily accessible power source.**

## Statement 8

**CAUTION:**
**Never remove the cover on a power supply or any part that has the following label attached.**

**Hazardous voltage, current, and energy levels are present inside any component that has this label attached. There are no serviceable parts inside these components. If you suspect a problem with one of these parts, contact a service technician.**

## Statement 12

**CAUTION:**
**The following label indicates a hot surface nearby.**

## Statement 26

**CAUTION:**
**Do not place any object on top of rack-mounted devices.**

## Statement 27

**CAUTION:**
**Hazardous moving parts are nearby.**

## Rack Safety Information, Statement 2

**DANGER**

- **Always lower the leveling pads on the rack cabinet.**
- **Always install stabilizer brackets on the rack cabinet.**
- **Always install servers and optional devices starting from the bottom of the rack cabinet.**
- **Always install the heaviest devices in the bottom of the rack cabinet.**

# Chapter 1. The System x3650 M5 server

This *Installation and Service Guide* contains information and instructions for setting up your System x3650 M5 Type 5462 server, instructions for installing some optional devices, cabling and configuring the server, removing and replacing devices, and diagnostics and troubleshooting information.

In addition to the instructions in "Installing optional devices" on page 282 for installing optional hardware devices, updating firmware and device drivers, and completing the installation, IBM Business Partners must also complete the steps in "Instructions for IBM Business Partners" on page 303.

The IBM System x3650 M5 Type 5462 server is a 2-U-high[1] rack model server for high-volume network transaction processing. This high-performance, multi-core server is ideally suited for networking environments that require superior microprocessor performance, input/output (I/O) flexibility, and high manageability.

Performance, ease of use, reliability, and expansion capabilities were key considerations in the design of the server. These design features make it possible for you to customize the system hardware to meet your needs today and provide flexible expansion capabilities for the future.

The server comes with a limited warranty. For information about the terms of the warranty, see the *Warranty Information* document that comes with the server.

The server contains IBM X-Architecture® technologies, which help increase performance and reliability. For more information, see "What your server offers" on page 13 and "Reliability, availability, and serviceability" on page 17.

You can obtain up-to-date information about the server and other IBM server products at http://www.ibm.com/systems/x/. At http://www.ibm.com/support/mysupport/, you can create a personalized support page by identifying IBM products that are of interest to you. From this personalized page, you can subscribe to weekly e-mail notifications about new technical documents, search for information and downloads, and access various administrative services.

If you participate in the IBM client reference program, you can share information about your use of technology, best practices, and innovative solutions; build a professional network; and gain visibility for your business. For more information about the IBM client reference program, see http://www.ibm.com/ibm/clientreference/.

**Note:** The illustrations in this document might differ slightly from your model.

In terms of simple-swap configurations, the server comes with either eight 2.5-inch or eight 3.5-inch simple-swap hard disk drive bays. The 2.5-inch simple-swap models are capable of expansion to sixteen 2.5-inch simple-swap hard disk drive bays with two simple-swap serveRAID option kits.

1. Racks are marked in vertical increments of 1.75 inches each. Each increment is referred to as a unit, or a "U". A 1-U-high device is approximately 1.75 inches tall.

© Copyright IBM Corp. 2014

In terms of hot-swap configurations, the server comes with either eight 3.5-inch SAS/SATA or eight 2.5-inch SAS/SATA hot-swap hard disk drive bays. Most models contain a ServeRAID SAS controller. The 2.5-inch models are capable of expansion to twenty-four 2.5-inch SAS/SATA hot-swap hard disk drive bays while the 3.5-inch models are capable of expansion to twelve 3.5-inch SAS/SATA hot-swap hard disk drive bays.

**Note:** The ID for each bay is printed on the server front, above each bay.

The following illustration shows a server with eight 2.5-inch simple-swap hard disk drive bays. You can purchase an optional kit to install the eight additional 2.5-inch simple-swap hard disk drives to upgrade the server to sixteen 2.5-inch simple-swap hard disk drive bays.

**Note:** The basic 2.5-inch simple-swap model supports SATA simple-swap hard disk drives only. With the simple-swap serveRAID function, it supports SATA and SAS simple-swap hard disk drives.

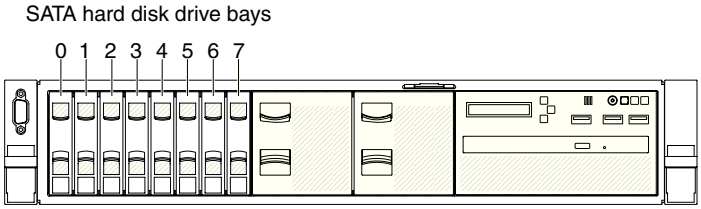


*Figure 1. 2.5-inch simple-swap model front view*

The following illustration shows a server with eight 2.5-inch hot-swap hard disk drive bays.

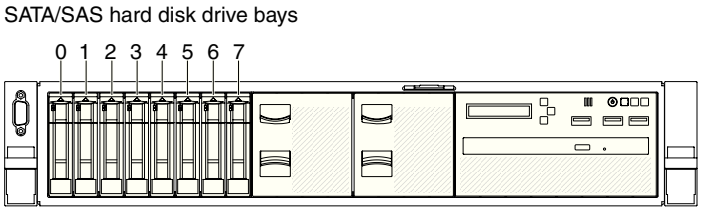


*Figure 2. 2.5-inch hot-swap model front view*

You can purchase an optional kit to install the eight additional 2.5-inch hard disk drive bays. The following illustration shows a server with sixteen 2.5-inch hot-swap hard disk drive bays.

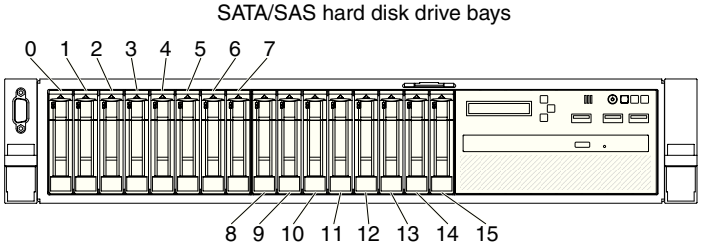


*Figure 3. 16-drive-capable model front view*

You can purchase an optional kit to install the eight additional 2.5-inch hard disk drive bays to a 24-drive-capable model. The following illustration shows a server with twenty-four 2.5-inch hot-swap hard disk drive bays.

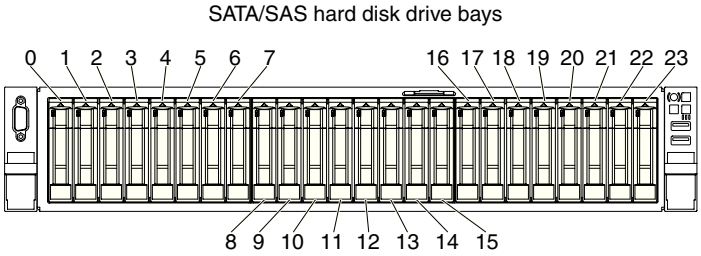


*Figure 4. 24-drive-capable model front view*

The following illustration shows a server with eight 3.5-inch simple-swap hard disk drive bays. Moreover, you can purchase an option to obtain the simple-swap serveRAID function.

**Note:** The basic 3.5-inch simple-swap model supports SATA simple-swap hard disk drives only. With the simple-swap serveRAID function, it supports SATA and SAS simple-swap hard disk drives.

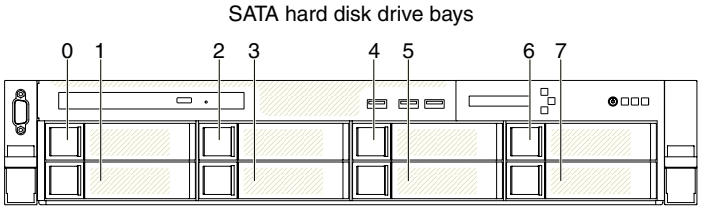


*Figure 5. 3.5-inch simple-swap model front view*

The following illustration shows a server with eight 3.5-inch hot-swap hard disk drive bays.

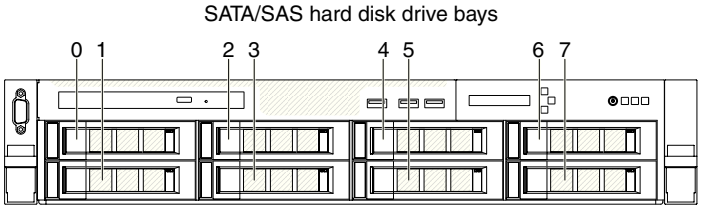


*Figure 6. 3.5-inch hot-swap model front view*

The following illustration shows a server with twelve 3.5-inch hot-swap hard disk drive bays.

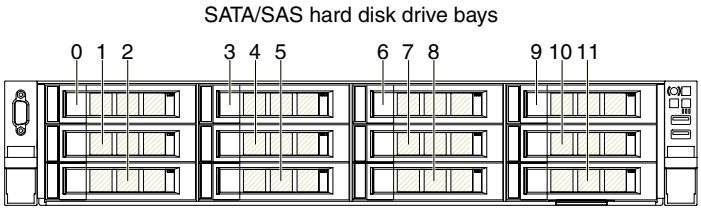


*Figure 7. 12-drive-capable model front view*

If firmware and documentation updates are available, you can download them from the IBM website. The server might have features that are not described in the documentation that comes with the server, and the documentation might be updated occasionally to include information about those features, or technical updates might be available to provide additional information that is not included in the server documentation. To check for updates, go to http://www.ibm.com/supportportal.

Record information about the server in the following table.

| | |
|---|---|
| **Product name** | IBM System x3650 M5 server |
| **Machine type** | 5462 |
| **Model number** | _____ |
| **Serial number** | _____ |

The model number and serial number are on the ID label on the front of the server, as shown in the following illustration.

**Note:** The illustrations in this document might differ slightly from your hardware.

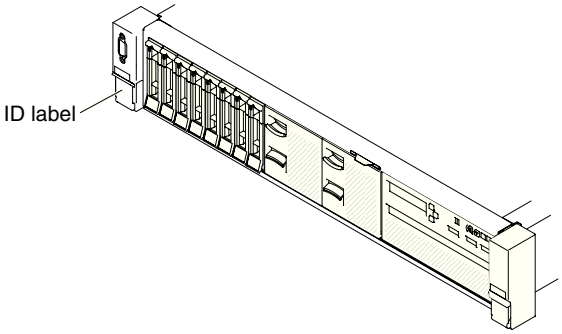


*Figure 8. ID label*

In addition, the system service label, which is on the cover of the server, provides a QR code for mobile access to service information. You can scan the QR code using a QR code reader and scanner with a mobile device and get quick access to the IBM Service Information website. The IBM Service Information website provides additional information for parts installation and replacement videos, and error codes for server support.

The following illustration shows the QR code (http://ibm.co/1qD4JX4):

*Figure 9. QR code*

You can download an IBM *ServerGuide Setup and Installation* CD to help you configure the hardware, install device drivers, and install the operating system.

For a list of supported optional devices for the server, see http://www.ibm.com/systems/info/x86servers/serverproven/compat/us/.

See the *Rack Installation Instructions* document on the IBM *System x Documentation* CD for complete rack installation and removal instructions.

## The IBM Documentation CD

The IBM *Documentation* CD contains documentation for the server in Portable Document Format (PDF) and includes the IBM Documentation Browser to help you find information quickly.

### Hardware and software requirements

The hardware and software requirements of the IBM *Documentation* CD.

The IBM *Documentation* CD requires the following minimum hardware and software:

- Microsoft Windows XP, Windows 2000, or Red Hat Linux
- 100 MHz microprocessor
- 32 MB of RAM
- Adobe Acrobat Reader 3.0 (or later) or xpdf, which comes with Linux operating systems

### The IBM Documentation CD

Use the Documentation Browser to browse the contents of the CD, read brief descriptions of the documents, and view documents, using Adobe Acrobat Reader or xpdf.

The Documentation Browser automatically detects the regional settings in use in your server and displays the documents in the language for that region (if available). If a document is not available in the language for that region, the English-language version is displayed.

Use one of the following procedures to start the Documentation Browser:

- If Autostart is enabled, insert the CD into the CD or DVD drive. The Documentation Browser starts automatically.
- If Autostart is disabled or is not enabled for all users, use one of the following procedures:
  - If you are using a Windows operating system, insert the CD into the CD or DVD drive and click **Start -> Run**. In the **Open** field, type

    ```
    e:\win32.bat
    ```

where *e* is the drive letter of the CD or DVD drive, and click **OK**.

– If you are using Red Hat Linux, insert the CD into the CD or DVD drive; then, run the following command from the /mnt/cdrom directory:

```
sh runlinux.sh
```

Select the server from the **Product** menu. The **Available Topics** list displays all the documents for the server. Some documents might be in folders. A plus sign (+) indicates each folder or document that has additional documents under it. Click the plus sign to display the additional documents.

When you select a document, a description of the document is displayed under **Topic Description**. To select more than one document, press and hold the Ctrl key while you select the documents. Click **View** to view the selected document or documents in Acrobat Reader or xpdf. If you selected more than one document, all the selected documents are opened in Acrobat Reader or xpdf.

To search all the documents, type a word or word string in the **Search** field and click **Search**. The documents in which the word or word string appears are listed in order of the most occurrences. Click a document to view it, and press Crtl+F to use the Acrobat search function, or press Alt+F to use the xpdf search function within the document.

Click **Help** for detailed information about using the Documentation Browser.

## Related documentation

This *Installation and Service Guide* contains general information about the server including how to set up and cable the server, how to install supported optional devices, how to configure the server, and information to help you solve problems yourself and information for service technicians.

The following documentation also comes with the server:

- *Environmental Notices and User Guide*

  This document is in PDF format on the IBM *Documentation* CD. It contains translated environmental notices.
- *IBM License Agreement for Machine Code*

  This document is in PDF format on the IBM *Documentation* CD. It provides translated versions of the *IBM License Agreement for Machine Code* for your product.
- *Important Notices*

  This document is in printed format and comes with the server. It contains information about the safety, environmental, and electronic emission notices for your IBM product.
- *Licenses and Attributions Documents*

  This document is in PDF format on the IBM *Documentation* CD. It provides the open source notices.
- *Rack Installation Instructions*

  This printed document contains instructions for installing the server in a rack and comes with the rack kit.
- *Safety Information*

  This document is in PDF format on the IBM *Documentation* CD. It contains translated caution and danger statements. Each caution and danger statement

that appears in the documentation has a number that you can use to locate the corresponding statement in your language in the *Safety Information* document.

- *Safety Information Labels*

  This document provides the Simplified Chinese, Mongolian, Tibetan, Uygur, and Zhuang translated versions of the product safety labels.

- *Warranty Information*

  This document is in printed format and comes with the server. It contains warranty terms and a pointer to the IBM Statement of Limited Warranty on the IBM website.

Depending on the server model, additional documentation might be included on the IBM *Documentation* CD.

The ToolsCenter for System x and BladeCenter is an online information center that contains information about tools for updating, managing, and deploying firmware, device drivers, and operating systems. The ToolsCenter for System x and BladeCenter is at http://publib.boulder.ibm.com/infocenter/toolsctr/v1r0/.

The server might have features that are not described in the documentation that you received with the server. The documentation might be updated occasionally to include information about those features, or technical updates might be available to provide additional information that is not included in the server documentation. These updates are available from the IBM website. To check for updates, go to http://www.ibm.com/supportportal/.

## Notices and statements in this document

The caution and danger statements in this document are also in the multilingual *Safety Information* document, which is on the IBM *System x Documentation* CD. Each statement is numbered for reference to the corresponding statement in your language in the *Safety Information* document.

The following notices and statements are used in this document:

- **Note:** These notices provide important tips, guidance, or advice.
- **Important:** These notices provide information or advice that might help you avoid inconvenient or problem situations.
- **Attention:** These notices indicate potential damage to programs, devices, or data. An attention notice is placed just before the instruction or situation in which damage might occur.
- **Caution:** These statements indicate situations that can be potentially hazardous to you. A caution statement is placed just before the description of a potentially hazardous procedure step or situation.
- **Danger:** These statements indicate situations that can be potentially lethal or extremely hazardous to you. A danger statement is placed just before the description of a potentially lethal or extremely hazardous procedure step or situation.

## Server features and specifications

The following information is a summary of the features and specifications of the server. Depending on the model, some features might not be available, or some specifications might not apply.

**Microprocessor (depending on the model):**

- Supports up to two Intel Xeon™ E5-2600 v3 series multi-core microprocessors (one installed)
- Two QuickPath Interconnect (QPI) links speed up to 9.6 GT per second

**Notes:**

- Use the Setup utility program to determine the type and speed of the microprocessors.
- For a list of supported microprocessors, see http://www.ibm.com/systems/info/x86servers/serverproven/compat/us/.

**Memory (depending on the model):**

- Minimum: 4 GB
- Maximum: 1.5 TB
  - 384 GB using registered DIMMs (RDIMMs)
  - 1.5 TB using load reduction DIMMs (LRDIMMs)
- Type:
  - PC4-17000 (DDR4-2133), operating speed depends on memory population
  - Single-rank, dual-rank, or quad-rank
  - Registered DIMM (RDIMM) or load reduced DIMM (LRDIMM)
- Slots: 24 dual inline
- Supports (depending on the model):
  - 4 GB, 8 GB, and 16 GB registered DIMMs
  - 32 GB and 64 GB load reduction DIMM

**Integrated functions:**

- Integrated management module 2.1 (IMM2.1), which consolidates multiple management functions in a single chip.
- Broadcom BCM5719 Quad Port Gigabit Ethernet controller with Wake on LAN support
- Eight Universal Serial Bus (USB)
  (depending on the model)
  - Three front of the chassis (Two 2.0 ports and one 3.0 port)
  - Four rear of the chassis (Two 2.0 ports and two 3.0 ports)
  - One internal 3.0 port used for Hypervisor USB key
- Four network ports (four 1 Gb Ethernet ports on the system)
- Supports one optional ML2 network daughter card
- One System Management RJ-45 on the rear to connect to a systems management network. This system management connector is dedicated to the integrated management module 2.1 (IMM2.1) functions.
- Optional serial port

**Hard disk drive expansion bays (depending on the model):**

- 2.5-inch models:
  - Supports up to sixteen 2.5-inch simple-swap SAS/SATA hard disk drive bays.
  - Supports up to twenty-six 2.5-inch hot-swap SAS/SATA hard disk drive bays .
- 3.5-inch models:

- Supports up to eight 3.5-inch simple-swap SAS/SATA hard disk drive bays.
- Supports up to fourteen 3.5-inch hot-swap and two 2.5-inch hot-swap SAS/SATA hard disk drive bays.

**Attention:** As a general consideration, do not mix standard 512-byte and advanced 4-KB format drives in the same RAID array because it may lead to potential performance issues.

**SATA optical drives (optional):**

- DVD-ROM
- Multi-burner

**RAID controllers (depending on the model):**

- A ServeRAID M1215 SAS/SATA adapter that provides RAID 0, 1, and 10 with optional FoD RAID 5/50 and SED (Self Encrypting Drive) upgrade.
- A ServeRAID M5210 SAS/SATA adapter that provides RAID 0, 1, and 10. Optional upgrade:
  - RAID 5/50 (1 GB Cache) with optional FoD RAID 6/60 and SED upgrade
  - RAID 5/50 (1 GB Flash) with optional FoD RAID 6/60 and SED upgrade
  - RAID 5/50 (2 GB Flash) with optional FoD RAID 6/60 and SED upgrade
  - RAID 5/50 (4 GB Flash) with optional FoD RAID 6/60 and SED upgrade
  - FoD RAID 6/60 Upgrade
  - FoD Zero Cache/RAID 5/50
  - FoD Performance Accelerator
  - FoD SSD Caching Enabler

**Video controller (integrated into integrated management module 2.1 (IMM2.1)):**

- Matrox G200eR2

  **Note:** The maximum video resolution is 1600 x 1200 at 75 Hz.
  - SVGA compatible video controller
  - DDR3 528 MHz SDRAM video memory controller
  - Avocent Digital Video Compression
  - 16 MB of video memory (not expandable)

**Size (2U):**

- Height: 86.5 mm (3.406 in.)
- Depth: EIA flange to rear - 755 mm (29.724 in.), Overall - 800 mm (31.496 in.)
- Width: With top cover - 445.6 mm (17.543 in.), With EIA - 482.0 mm (18.976 in.)
- Weight: approximately 28 kg (62 lb) to 34 kg (75 lb) depending upon configuration

**PCI expansion slots:**

**Riser-card assembly 1**

- Type 1
  - Slot 1: PCI Express 3.0 x8 (full-height, full-length)
  - Slot 2: PCI Express 3.0 x8 (full-height, full-length)
  - Slot 3: PCI Express 3.0 x8 (full-height, half-length)

- Type 2
  - Slot 1: PCI Express 3.0 x8 (full-height, full-length)
  - Slot 2: PCI Express 3.0 x8 (full-height, full-length)
  - Slot 3: ML2
- Type 3
  - Slot 1: PCI Express 3.0 x16 (full-height, full-length)
  - Slot 2: Not available
  - Slot 3: PCI Express 3.0 x8 (full-height, half-length)
- Type 4
  - Slot 1: PCI Express 3.0 x16 (full-height, full-length)
  - Slot 2: Not available
  - Slot 3: ML2

**PCI expansion slots 4**

- Slot 4: PCI Express 3.0 x8 (Low-profile)

**PCI expansion slots 5**

- Slot 5: PCI Express 3.0 x16 (Low-profile)

**Riser-card assembly 2**

- Type 5
  - Slot 6: PCI Express 3.0 x8 (full-height, full-length)
  - Slot 7: PCI Express 3.0 x8 (full-height, full-length)
  - Slot 8: PCI Express 3.0 x8 (full-height, half-length)
- Type 6
  - Slot 6: PCI Express 3.0 x16 (full-height, full-length)
  - Slot 7: Not available
  - Slot 8: PCI Express 3.0 x8 (full-height, half-length)

**Electrical input:**

- Sine-wave input (50/60 Hz) required
- For 550W/750W/900W Platinum power supply
  - Input voltage low range:
    - Minimum: 100 Vac
    - Maximum: 127 Vac
  - Input voltage high range:
    - Minimum: 200 Vac
    - Maximum: 240 Vac
- For 750W Titanium power supply
  - Input voltage range:
    - Minimum: 200 Vac
    - Maximum: 240 Vac
- Input kilovolt-amperes (kVA), approximately:
  - Minimum: 0.168 kVA
  - Maximum: 1.194 kVA

**Notes:**

1. Power consumption and heat output vary depending on the number and type of optional features installed and the power-management optional features in use.
2. The noise emission level stated is the declared (upper limit) sound power level, in bels, for a random sample of machines. All measurements are made in accordance with ISO 7779 and reported in conformance with ISO 9296. Actual sound-pressure levels in a given location might exceed the average values stated because of room

reflections and other nearby noise sources. The noise emission level stated in the declared (upper limit) sound-power level, in bels, for a random sample of system.

**Hot-swap fans:**

- One microprocessor: 4 dual-motor hot-swap fans
- Two microprocessors: 6 dual-motor hot-swap fans

**Power supply:**

- Up to two hot-swap power supplies for redundancy support
  - 550-watt ac 80 PLUS Platinum
  - 750-watt ac 80 PLUS Platinum
  - 750-watt ac 80 PLUS Titanium
  - 900-watt ac 80 PLUS Platinum

**Note:**

1. Power supplies and redundant power supplies in the server must be with the same power rating, wattage or level.
2. You may use the IBM Power Configurator utility to determine current system power consumption. For more information and to download the utility, go to http://www.ibm.com/systems/bladecenter/resources/powerconfig.html.

**Acoustical noise emissions:**

- Sound power, idling: 6.6 bels maximum
- Sound power, operating: 6.6 bels maximum

**Heat output:**

Approximate heat output:

- Minimum configuration: 587 Btu per hour (AC 172 watts)
- Maximum configuration: 4063 Btu per hour (AC 1191 watts)

**Environment:**

The IBM System x3650M5 compute node complies with ASHRAE class A3 specifications.

**Power on:**

- Temperature: 5°C - 40°C (41°F - 104°F) up to 950mm (3,117ft). Above 950m, de-rated maximum air temperature is 1C / 175m.
- Humidity, non-condensing: -12°C dew point (10.4°F) and 8% - 85% relative humidity.
- Maximum dew point: 24°C (75°F)
- Maximum altitude: 3050 m (10,000 ft) and 5°C - 28°C (41°F - 82°F)
- Maximum rate of temperature change: 5°C/hr (41°F/hr) for tape drive, 20°C/hr (68°F/hr) for HDDs

**Power off:**

- Temperature: 5°C to 45°C (41°F - 113°F)
- Relative humidity: 8% - 85%
- Maximum dew point: 27°C (80.6°F)

**Storage (non-operating):**

- Temperature: 1°C to 60°C (33.8°F - 140°F)
- Altitude: 3050 m (10,000 ft)

- Relative humidity: 5% - 80%
- Maximum dew point: 29°C (84.2°F)

**Shipment (non-operating):**

- Temperature: -40°C to 60°C (-40°F - 140°F)
- Altitude: 10,700 m (35,105 ft)
- Relative humidity: 5% - 100%
- Maximum dew point: 29°C (84.2°F)

**Attention:**

- Design to ASHRAE Class A3, ambient of 40°C, with relaxed support:
  - Support cloud like workload with no performance degradation acceptable (Turbo-Off)
  - Under no circumstance, can any combination of worst case workload and configuration result in system shutdown or design exposure at 40°C
- Chassis is powered on.
- A3 - Derate maximum allowable temperature 1°C/175 m above 950 m.
- The minimum humidity level for class A3 is the higher (more moisture) of the -12°C dew point and the 8% relative humidity. These intersect at approximately 25°C. Below this intersection (~25°C) the dew point (-12°C) represents the minimum moisture level, while above it relative humidity (8%) is the minimum.
- Moisture levels lower than 0.5°C DP, but not lower -10 °C DP or 8% relative humidity, can be accepted if appropriate control measures are implemented to limit the generation of static electricity on personnel and equipment in the data center. All personnel and mobile furnishings and equipment must be connected to ground via an appropriate static control system. The following items are considered the minimum requirements:
  - Conductive materials (conductive flooring, conductive footwear on all personnel that go into the datacenter, all mobile furnishings and equipment will be made of conductive or static dissipative materials).
  - During maintenance on any hardware, a properly functioning wrist strap must be used by any personnel who contacts IT equipment.
- 5°C/hr for data centers employing tape drives and 20°C/hr for data centers employing disk drives.
- Chassis is removed from original shipping container and is installed but not in use, for example, during repair, maintenance, or upgrade.
- The equipment acclimation period is 1 hour per 20°C of temperature change from the shipping environment to the operating environment.
- Condensation is acceptable, but not rain

Particulate contamination: airborne particulates and reactive gases acting alone or in combination with other environmental factors such as humidity or temperature might pose a risk to the server. For information about the limits for particulates and gases, see “Particulate contamination” on page 979.

## What your server offers

This section introduces features and technologies the server uses and provides.

- **Active Energy Manager**

  The IBM Active Energy Manager solution is an IBM Systems Director plug-in that measures and reports server power consumption as it occurs. This enables you to monitor power consumption in correlation to specific software application programs and hardware configurations. You can obtain the measurement values through the systems-management interface and view them, using IBM Systems Director. For more information, including the required levels of IBM Systems Director and Active Energy Manager, see the IBM Systems Director Information Center at http://pic.dhe.ibm.com/infocenter/director/pubs/index.jsp?topic=%2Fcom.ibm.director.main.helps.doc%2Ffqm0_main.htmlor see http://www.ibm.com/systems/management/director/downloads.html.

- **Dynamic System Analysis (DSA)**

  The server comes with the IBM Dynamic System Analysis (DSA) Preboot diagnostic program. DSA collects and analyzes system information to aid in diagnosing server problems, as well as offering a rich set of diagnostic tests of the major components of the server. DSA creates a DSA log, which is a chronologically ordered merge of the system-event log (as the IPMI event log), the integrated management module (IMM) event log (as the ASM event log), and the operating-system event logs. You can send the DSA log as a file to IBM Support or view the information as a text file or HTML file.

  Two editions of Dynamic System Analysis are available: DSA Portable and DSA Preboot. For more information about both editions, see "DSA editions" on page 85.

- **Features on Demand**

  If a Features on Demand feature is integrated in the server or in an optional device that is installed in the server, you can purchase an activation key to activate the feature. For information about Features on Demand, see /http://www.ibm.com/systems/x/fod/.

- **IBM *ServerGuide Setup and Installation* CD**

  The *ServerGuide Setup and Installation* CD, which you can download from the web, provides programs to help you set up the server and install a Windows operating system. The ServerGuide program detects installed optional hardware devices and provides the correct configuration programs and device drivers. For more information about the *ServerGuide Setup and Installation* CD, see "Using the ServerGuide Setup and Installation CD" on page 46.

- **IBM Systems Director**

  IBM Systems Director is a platform-management foundation that streamlines the way you manage physical and virtual systems in a heterogeneous environment. By using industry standards, IBM Systems Director supports multiple operating systems and virtualization technologies. For more information, see the IBM Systems Director Information Center at http://publib.boulder.ibm.com/infocenter/director/v6r1x/index.jsp?topic=/director_6.1/fqm0_main.htmland "IBM Systems Director" on page 16.

- **Integrated management module 2.1 (IMM2.1)**

  The integrated management module 2.1 (IMM2.1) combines service processor functions, video controller, and remote presence and blue-screen capture features in a single chip. The IMM provides advanced service-processor control, monitoring, and alerting function. If an environmental condition exceeds a threshold or if a system component fails, the IMM lights LEDs to help you diagnose the problem, records the error in the IMM event log, and alerts you to

the problem. Optionally, the IMM also provides a virtual presence capability for remote server management capabilities. The IMM provides remote server management through the following industry-standard interfaces:

- Intelligent Platform Management Interface (IPMI) version 2.0
- Simple Network Management Protocol (SNMP) version 3.0
- Common Information Model (CIM)
- Web browser

Some of the features that are unique to the IMM are enhanced performance, higher-resolution remote video, expanded security options, and Feature on Demand enablement for hardware and firmware options.

For additional information, see "Using the integrated management module" on page 56 and the Integrated Management Module II User's Guide at http://www.ibm.com/support/entry/portal/docdisplay?lndocid=MIGR-5086346.

- **Integrated network support**

  The server comes with an integrated dual-port Intel Gigabit Ethernet controller, which supports connection to a 10 Mbps, 100 Mbps, or 1000 Mbps network. For more information, see "Configuring the Ethernet controller" on page 61.

- **Integrated Trusted Platform Module (TPM)**

  This integrated security chip performs cryptographic functions and stores private and public secure keys. It provides the hardware support for the Trusted Computing Group (TCG) specification. You can download the software to support the TCG specification, when the software is available. You can enable TPM support through the Setup utility under the **System Security** menu option.

- **Large data-storage capacity and hot-swap capability**

  The hot-swap server models support a maximum of twenty-six 2.5-inch or fourteen 3.5-inch hot-swap Serial Attached SCSI (SAS) hard disk drives or hot-swap Serial ATA (SATA) hard disk drives. The simple-swap server models support a maximum of sixteen 2.5-inch or eight 3.5-inch simple-swap SATA hard disk drives.

  With the hot-swap feature, you can add, remove, or replace hard disk drives without turning off the server.

- **Large system-memory capacity**

  The server can support up to 1536 GB of system memory. The server provides 24 dual inline memory module (DIMM) connectors. The server memory controller supports error correcting code (ECC) for PC4-17000 (DDR4-2133), DDR4 (fourth-generation double-data-rate), synchronous dynamic random access memory (SDRAM) DIMMs.

- **Mobile access to IBM Service Information website**

  The server provides a QR code on the system service label, which is on the cover of the server, that you can scan using a QR code reader and scanner with a mobile device to get quick access to the IBM Service Information website. The IBM Service Information website provides additional information for parts installation and replacement videos, and error codes for server support. For the QR code, see QR code information on page Chapter 1, "The System x3650 M5 server," on page 1.

- **Multi-core processing**

  The server supports up to two Intel Xeon™ E5-2600 v3 series multi-core microprocessors. The server comes with a minimum of one microprocessor.

- **PCI adapter capabilities**

The server has two PCI interface risers. See "Replacing an adapter" on page 190 for detailed information.

- **SD adapter**

  A raid controller for Secure Digital (SD) media. It has two upstream connections, a USB connection to the server chipset, and an MMC connection to the integrated management module 2.1 (IMM2.1).

- **Redundant connection**

  The addition of the optional Ethernet adapter provides failover capability to a redundant Ethernet connection with the applicable application installed. If a problem occurs with the primary Ethernet connection and the optional Ethernet adapter is installed on the server, all Ethernet traffic that is associated with the primary connection is automatically switched to the optional redundant Ethernet adapter connection. If the applicable device drivers are installed, this switching occurs without data loss and without user intervention.

- **Redundant cooling and optional power capabilities**

  The server supports a maximum of two 550-watt, 750-watt, or 900-watt hot-swap power supplies and six dual-motor hot-swap fans, which provide redundancy and hot-swap capability for a typical configuration. The redundant cooling by the fans in the server enables continued operation if one of the fans fails. The server comes with the minimum of one 550-watt, 750-watt, or 900-watt hot-swap power supply and four fans.

  You must install the fifth and sixth fans when you install the second microprocessor in the server. You can order the second optional power supply for power redundancy.

  **Note:** You cannot mix different wattages and different 80 plus efficiency level of power supplies in the server.

- **ServeRAID support**

  The ServeRAID adapter provides hardware redundant array of independent disks (RAID) support to create configurations. The standard RAID adapter provides RAID levels 0, 1, and 10. An optional RAID adapter is available for purchase.

- **Systems-management capabilities**

  The server comes with an IMM2.1. When the IMM is used with the systems-management software that comes with the server, you can manage the functions of the server locally and remotely. The IMM also provides system monitoring, event recording, and network alert capability. The systems-management connector on the rear of the server is dedicated to the IMM. The dedicated systems-management connector provides additional security by physically separating the management network traffic from the production network. You can use the Setup utility to configure the server to use a dedicated systems-management network or a shared network.

- **UEFI-compliant server firmware**

  IBM System x Server Firmware (server firmware) offers several features, including Unified Extensible Firmware Interface (UEFI) 2.1 compliance; Active Energy Manager technology; enhanced reliability, availability, and serviceability (RAS) capabilities; and basic input/output system (BIOS) compatibility support. UEFI replaces the BIOS and defines a standard interface between the operating system, platform firmware, and external devices. UEFI-compliant System x servers are capable of booting UEFI-compliant operating systems, BIOS-based operating systems, and BIOS-based adapters as well as UEFI-compliant adapters.

  **Note:** The server does not support DOS (Disk Operating System).

- **VMware ESXi embedded hypervisor**

  An optional USB flash device with VMware ESXi embedded hypervisor software is available for purchase. Hypervisor is virtualization software that enables multiple operating systems to run on a host system at the same time. The USB embedded hypervisor flash device can be installed in USB connector on the system board. For more information about using the embedded hypervisor, see "Using the embedded hypervisor" on page 60.
- **IBM Enterprise X-Architecture technology**

  IBM X-Architecture technology combines proven, innovative IBM designs to make your Intel-processor-based server powerful, scalable, and reliable.

## IBM Systems Director

IBM Systems Director is a platform-management foundation that streamlines the way you manage physical and virtual systems supports multiple operating systems and virtualization technologies in IBM and non-IBM x86 platforms.

Through a single user interface, IBM Systems Director provides consistent views for viewing managed systems, determining how these systems relate to one other, and identifying their statuses, helping to correlate technical resources with business needs. A set of common tasks that are included with IBM Systems Director provides many of the core capabilities that are required for basic management, which means instant out-of-the-box business value. The common tasks include the following:

- Discovery
- Inventory
- Configuration
- System health
- Monitoring
- Updates
- Event notification
- Automation for managed systems

The IBM Systems Director Web and command-line interfaces provide a consistent interface that is focused on driving these common tasks and capabilities:

- Discovering, navigating, and visualizing systems on the network with the detailed inventory and relationships to the other network resources
- Notifying users of problems that occur on systems and the ability to isolate the sources of the problems
- Notifying users when systems need updates and distributing and installing updates on a schedule
- Analyzing real-time data for systems and setting critical thresholds that notify the administrator of emerging problems
- Configuring settings of a single system and creating a configuration plan that can apply those settings to multiple systems
- Updating installed plug-ins to add new features and functions to the base capabilities
- Managing the life cycles of virtual resources

For more information about IBM Systems Director, see the documentation on the *IBM Systems Director* DVD that comes with the server, the IBM Systems Director

Information Center at http://pic.dhe.ibm.com/infocenter/director/pubs/index.jsp?topic=%2Fcom.ibm.director.main.helps.doc%2Ffqm0_main.html, and the Systems Management website at http://www.ibm.com/systems/management/, which presents an overview of IBM Systems Management and IBM Systems Director.

## Reliability, availability, and serviceability

Three important computer design features are reliability, availability, and serviceability (RAS). The RAS features help to ensure the integrity of the data that is stored in the server, the availability of the server when you need it, and the ease with which you can diagnose and correct problems.

Your server has the following RAS features:

- 3-year parts and 3-year labor limited warranty (Machine Type 5462)
- 24-hour support center
- Automatic error retry and recovery
- Automatic restart on nonmaskable interrupt (NMI)
- Automatic restart after a power failure
- Backup basic input/output system switching under the control of the integrated management module (IMM)
- Built-in monitoring for fan, power, temperature, voltage, and power-supply redundancy
- Cable-presence detection on most connectors
- Chipkill memory protection
- Double-device data correction (DDDC) for x4 DRAM technology DIMMs. Ensures that data is available on a single x4 DRAM DIMM after a hard failure of up to two DRAM DIMMs. One x4 DRAM DIMM in each rank is reserved as a space device.
- Diagnostic support for ServeRAID and Ethernet adapters
- Error codes and messages
- Error correcting code (ECC) L3 cache and system memory
- Full Array Memory Mirroring (FAMM) redundancy
- Hot-swap cooling fans with speed-sensing capability
- Hot-swap hard disk drives
- Information and LCD system information display panel
- Integrated Management Module (IMM)
- LCD system information display panel for memory DIMMs, microprocessors, hard disk drives, solid state drives, power supplies, and fans
- Memory mirroring and memory sparing support
- Memory error correcting code and parity test
- Memory down sizing (non-mirrored memory). After a restart of the server after the memory controller detected a non-mirrored uncorrectable error and the memory controller cannot recover operationally, the IMM logs the uncorrectable error and informs POST. POST logically maps out the memory with the uncorrectable error, and the server restarts with the remaining installed memory.
- Menu-driven setup, system configuration, and redundant array of independent disks (RAID) configuration programs
- Microprocessor built-in self-test (BIST), internal error signal monitoring, internal thermal trip signal monitoring, configuration checking, and microprocessor and voltage regulator module failure identification through LCD system information display panel.
- Nonmaskable interrupt (NMI) button
- Parity checking on the small computer system interface (SCSI) bus and PCI-E and PCI buses

- Power management: Compliance with Advanced Configuration and Power Interface (ACPI)
- Power-on self-test (POST)
- Predictive Failure Analysis (PFA) alerts on memory, microprocessors, SAS/SATA hard disk drives or solid state drives, fans, power supplies, and VRM
- Redundant Ethernet capabilities with failover support
- Redundant hot-swap power supplies and redundant hot-swap fans
- Redundant network interface card (NIC) support
- Remind button to temporarily turn off the system-error LED
- Remote system problem-determination support
- ROM-based diagnostics
- ROM checksums
- Serial Presence Detection (SPD) on memory, VPD on system board, power supply, and hard disk drive or solid state drive backplanes, microprocessor and memory expansion tray, and Ethernet cards
- Single-DIMM isolation of excessive correctable error or multi-bit error by the Unified Extensible Firmware Interface (UEFI)
- Solid state drives
- Standby voltage for system-management features and monitoring
- Startup (boot) from LAN through remote initial program load (RIPL) or dynamic host configuration protocol/boot protocol (DHCP/BOOTP)
- System auto-configuring from the configuration menu
- System-error logging (POST and IMM)
- Systems-management monitoring through the Inter-Integrated Circuit (IC) protocol bus
- Uncorrectable error (UE) detection
- Upgradeable POST, Unified Extensible Firmware Interface (UEFI), diagnostics, IMM firmware, and read-only memory (ROM) resident code, locally or over the LAN
- Vital product data (VPD) on microprocessors, system board, power supplies, and SAS/SATA (hot-swap hard disk drive or solid state drive) backplane
- Wake on LAN capability

## Server controls, LEDs, and power

This section describes the controls and light-emitting diodes (LEDs) and how to turn the server on and off.

For the locations of other LEDs on the system board, see “System-board LEDs” on page 33.

## Front view

The following illustrations show the controls, LEDs, and connectors on the front of your server model.

2.5-inch hard disk drive server model.

- 8 hard-disk drive configuration / 16 hard-disk drive configuration front view

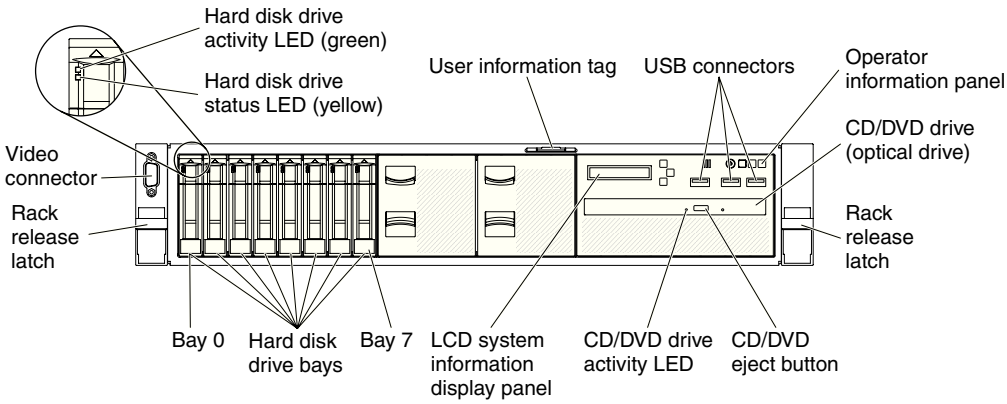


*Figure 10. 8 hard-disk drive configuration / 16 hard-disk drive configuration front view*

- 24 hard-disk drive configuration front view

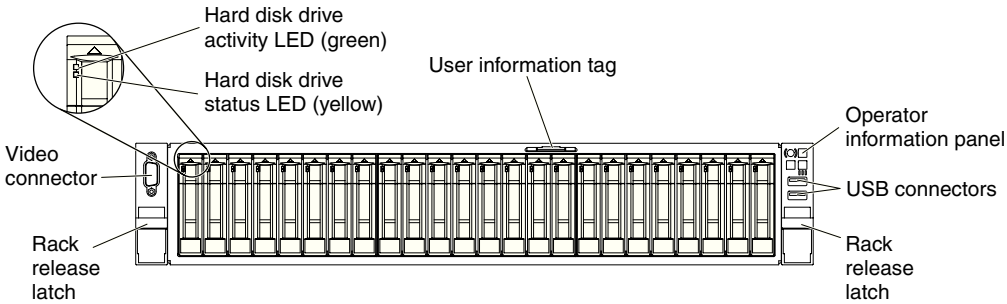


*Figure 11. 24 hard-disk drive configuration front view*

3.5-inch hard disk drive server model.

- 8 hard-disk drive configuration front view

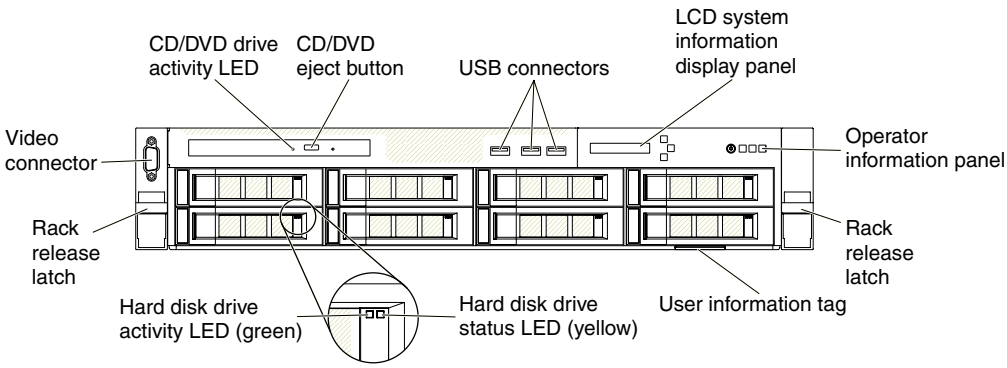


*Figure 12. 8 hard-disk drive configuration front view*

- 12 hard-disk drive configuration front view

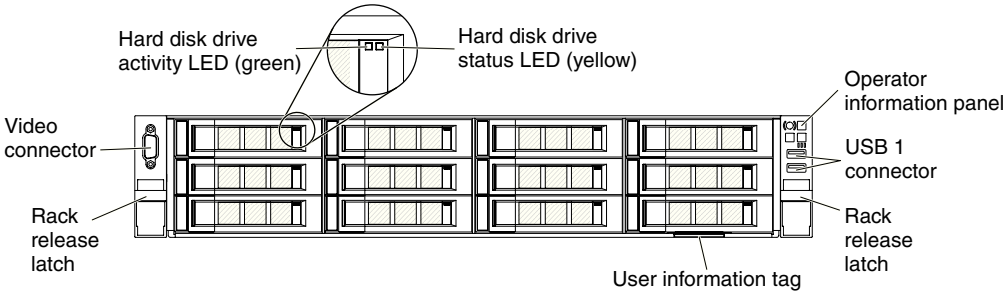


*Figure 13. 12 hard-disk drive configuration front view*

- **Rack release latches:** Press the latches on each front side of the server to slide the server out from the rack enclosure.
- **Hard disk drive activity LEDs:** This LED is used on hot-swap SAS or SATA hard disk drives. Each hot-swap hard disk drive has an activity LED, and when this LED is flashing, it indicates that the drive is in use.
- **Hard disk drive status LEDs:** This LED is used on hot-swap SAS or SATA hard disk drives. When this LED is lit, it indicates that the drive has failed. If an optional IBM ServeRAID controller is installed in the server, when this LED is flashing slowly (one flash per second), it indicates that the drive is being rebuilt. When the LED is flashing rapidly (three flashes per second), it indicates that the controller is identifying the drive.
- **Optional DVD eject button:** Press this button to release a DVD or CD from the optional DVD drive.
- **Optional DVD drive activity LED:** When this LED is lit, it indicates that the optional DVD drive is in use.
- **Operator information panel:** This panel contains controls and LEDs that provide information about the status of the server. For information about the controls and LEDs on the operator information panel, see "Operator information panel" on page 21.
- **Video connector:** Connect a monitor to this connector. The video connectors on the front and rear of the server can be used simultaneously.

  **Note:** The maximum video resolution is 1600 x 1200 at 75 Hz.
- **USB connectors:** Connect a USB device, such as a USB mouse or keyboard to any of these connectors.

## Operator information panel

The following illustration shows the controls and LEDs on the operator information panel.

Operator information panel

- Type 1

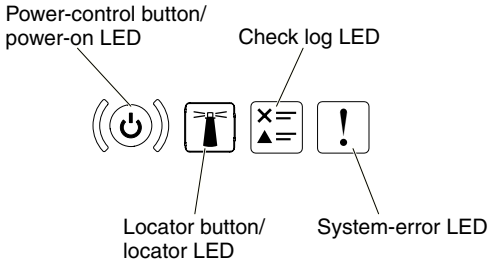


*Figure 14. Operator information panel*

- Type 2

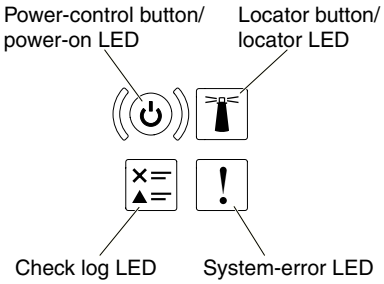


*Figure 15. Operator information panel*

- **Power-control button and power-on LED:** Press this button to turn the server on and off manually. The states of the power-on LED are as follows:

  **Off:** Power is not present or the power supply, or the LED itself has failed.

  **Flashing rapidly (4 times per second):** The server is turned off and is not ready to be turned on. The power-control button is disabled. This will last approximately 5 to 10 seconds.

  **Flashing slowly (once per second):** The server is turned off and is ready to be turned on. You can press the power-control button to turn on the server.

  **Lit:** The server is turned on.
- **System-locator button/LED:** Use this blue LED to visually locate the server among other servers. A system-locator LED is also on the rear of the server. This LED is used as a presence detection button as well. You can use IBM Systems Director or IMM web interface to light this LED remotely. This LED is controlled by the IMM. The locator button is pressed to visually locate the server among the others servers.
- **Check log LED:** When this yellow LED is lit, it indicates that a system error has occurred. Check the event log for additional information. See "Event logs" on page 81 for more information about event logs.
- **System-error LED:** When this yellow LED is lit, it indicates that a system error has occurred. A system-error LED is also on the rear of the server. An LED on

the LCD system information display panel, the operator information panel or on the system board is also lit to help isolate the error. This LED is controlled by the IMM.

## LCD system information display panel

Use this information for an overview of the LCD system information display panel, which displays various types of information about the server.

The LCD system information display panel is on the front of the server. The LCD system information display panel enables you to have quick access to system status, firmware, network, and health information. The following illustration shows the controls on the LCD system information display panel.

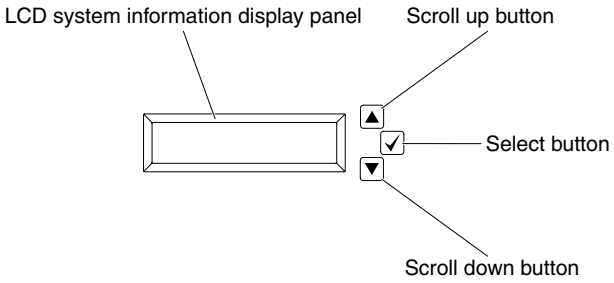


*Figure 16. LCD system information display panel*

- **Scroll up button:**Press this button to scroll up or scroll to the left in the main menu to locate and select the system information that you want displayed.
- **Select button:**Press this button to make your selection from the menu options.
- **Scroll down button:**Press this button to scroll down or scroll to the right in the main menu to location and select the system information that you want displayed.

The following is an illustration of the LCD system information display panel menu options flow.

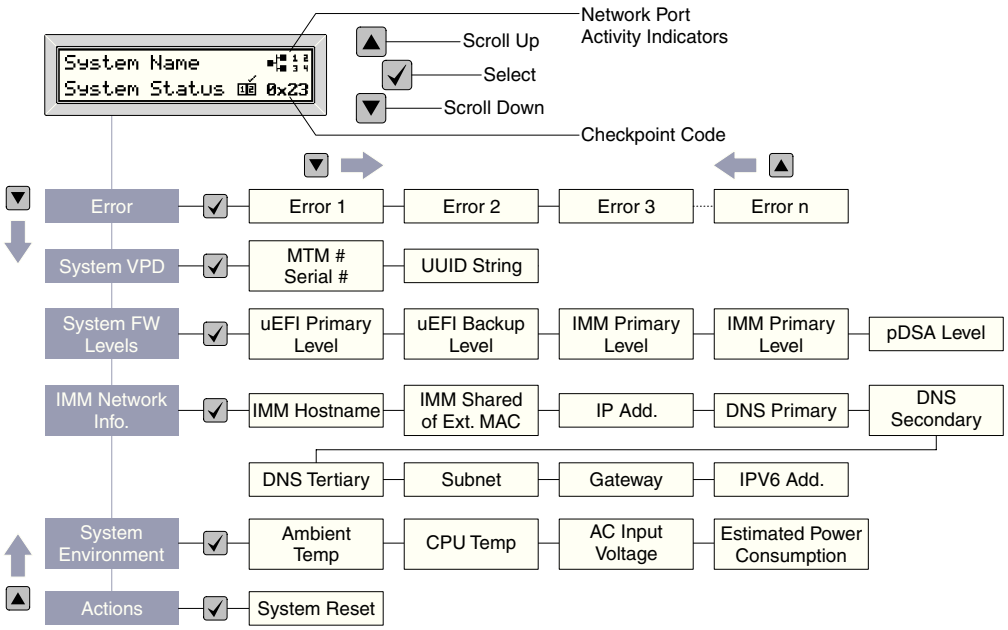


*Figure 17. LCD system information display panel menu options flow*

The following is an example of the information that you will see on the display panel. This example shows the layout of the information in the main menu when the debug feature is enabled.

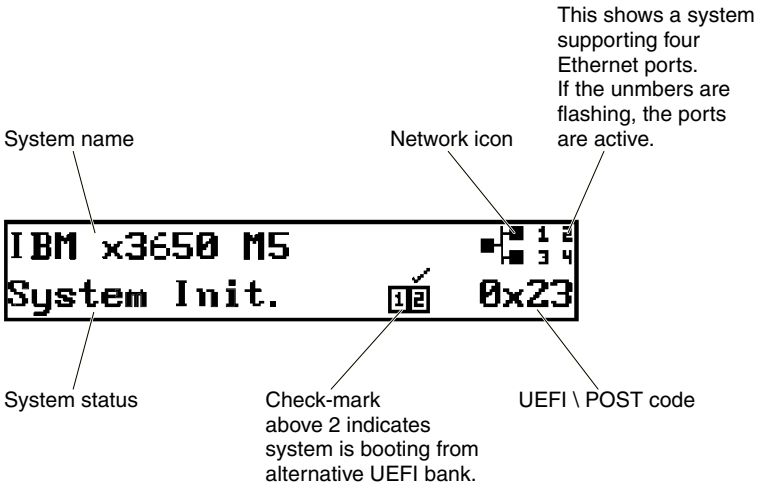


*Figure 18. Main menu*

When you navigate through the hierarchy of the menu options on the LCD system information display panel, the display panel shows the information for that option and the up and down arrows appear on the side of the display panel. When you get to the bottom of the hierarchy of the menu options, only the up arrow will be available. When you are at the top of the hierarchy of the menu options, only the down arrow will be available.

For the errors submenu set, if only one error occurs, the LCD display panel will display that error. If more than one error occurs, the LCD display panel displays the number of errors that have occurred. If no errors occur, the no error menu will be available for navigation.

To move within the menu options, use the Scroll up or Scroll down buttons, then the Select button to enter a submenu set.

The LCD system information display panel displays the following types of information about the server:

- IMM system error log (SEL)

  **Note:** The Scroll Down button will only function for this menu option if errors have occurred. A list of current errors reported by the system will be displayed. To see the system error log (SEL) and get the complete list of errors, go to the IMM web page ( see "Logging on to the web interface" on page 59).
- System VPD information:
  - Machine type and serial number
  - Universal Unique Identifier (UUID) string
- System firmware levels:
  - UEFI code level
  - IMM code level
  - pDSA code level
- IMM network information:
  - IMM hostname
  - IMM dedicated MAC address

    **Note:** Only the MAC address that is currently in use is displayed (dedicated or shared)
  - IMM shared MAC address
  - IP v4 information
  - IP v6 address
- System environmental information:
  - Ambient temperature
  - CPU temperature
  - AC input voltage
  - Estimated power consumption

## Rear view

The following illustration shows the connectors on the rear of the server.

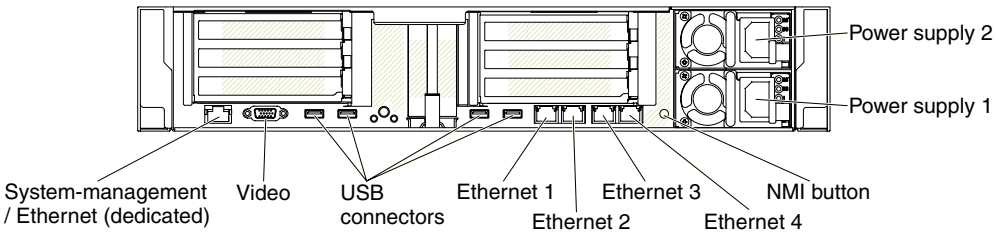


*Figure 19. Rear view*

- **NMI button:** Press this button to force a nonmaskable interrupt to the microprocessor. It allows you to blue screen the server and take a memory dump (use this button only when directed by the IBM service support). You

might have to use a pen or the end of a straightened paper clip to press the button. The NMI button is in the lower left-hand corner on the rear of the server.

- **Power connector:** Connect the power cord to this connector.

  **Note:** Power supply 1 is the default/primary power supply. If power supply 1 fails, you must replace it immediately.
- **Video connector:** Connect a monitor to this connector. The video connectors on the front and rear of the server can be used simultaneously.

  **Note:** The maximum video resolution is 1600 x 1200 at 75 Hz.
- **Eight Universal Serial Bus (USB) connectors:** Connect a USB device, such as a USB mouse or keyboard to any of these connectors. Eight Universal Serial Bus provides 2.0 and 3.0 ports.
- **Systems-management Ethernet connector:** Use this connector to connect the server to a network for full systems-management information control. This connector is used only by the IMM2.1. A dedicated management network provides additional security by physically separating the management network traffic from the production network. You can use the Setup utility to configure the server to use a dedicated systems management network or a shared network. See Using the Setup utility in the *Problem Determination and Service Guide* for more information.
- **Ethernet connectors:** Use either of these connectors to connect the server to a network. When you enable shared Ethernet for IMM2.1 in the Setup utility, you can access the IMM2.1 using either the Ethernet 1 or the system-management Ethernet (default) connector. See Using the Setup utility for more information.
- **Serial connector (optional):** Connect a 9-pin serial device to this connector. The serial port is shared with the integrated management module II (IMM2.1). The IMM2.1 can take control of the shared serial port to redirect serial traffic, using Serial over LAN (SOL).

The following illustration shows the LEDs on the rear of the server.

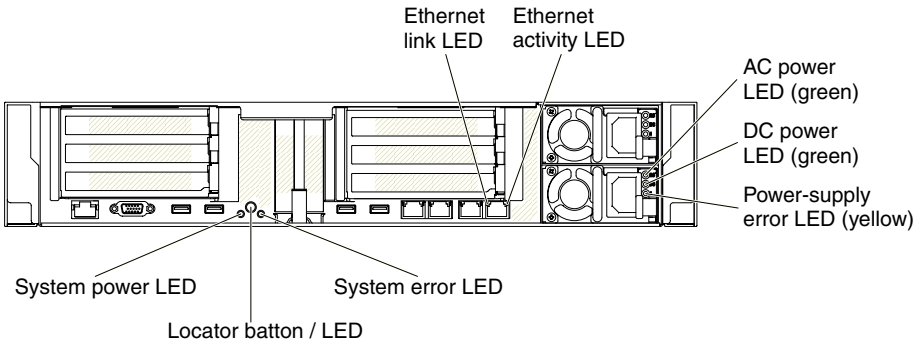


*Figure 20. LEDs rear view*

- **Ethernet activity LEDs:** When these LEDs are lit, they indicate that the server is transmitting to or receiving signals from the Ethernet LAN that is connected to the Ethernet port.
- **Ethernet link LEDs:** When these LEDs are lit, they indicate that there is an active link connection on the 10BASE-T, 100BASE-TX, or 1000BASE-TX interface for the Ethernet port.

- **AC power LED:** Each hot-swap ac power supply has an ac power LED. When the ac power LED is lit, it indicates that sufficient power is coming into the power supply through the power cord. During typical operation, the ac power LED is lit. For any other combination of LEDs, see "AC power-supply LEDs" on page 78.
- **DC power LED:** Each hot-swap ac power supply has a dc power LED. When the dc power LED is lit, it indicates that the power supply is supplying adequate dc power to the system. During typical operation, both the ac and dc power LEDs are lit. For any other combination of LEDs, see "AC power-supply LEDs" on page 78.
- **Power-supply error LED:** When the power-supply error LED is lit, it indicates that the power supply has failed.

  **Note:** Power supply 1 is the default/primary power supply. If power supply 1 fails, you must replace the power supply immediately.
- **Power-on LED:** When this LED is lit and not flashing, it indicates that the server is turned on. The states of the power-on LED are as follows:

  **Off:** Power is not present, or the power supply or the LED itself has failed.

  **Flashing rapidly (4 times per second):** The server is turned off and is not ready to be turned on. The power-control button is disabled. This will last approximately 5 to 10 seconds.

  **Flashing slowly (once per second):** The server is turned off and is ready to be turned on. You can press the power-control button to turn on the server.

  **Lit:** The server is turned on.
- **System-locator LED:** Use this LED to visually locate the server among other servers. You can use IBM Systems Director or IMM2.1 web interface to light this LED remotely.
- **System-error LED:** When this LED is lit, it indicates that a system error has occurred. An LED on the LCD system information display panel is also lit to help isolate the error.

## PCI riser-card adapter expansion slot locations

The section shows the PCI expansion slot connector locations on the server.

Based on the server configuration, the locations of the adapter expansion slots from the rear of the server may be either of the following.

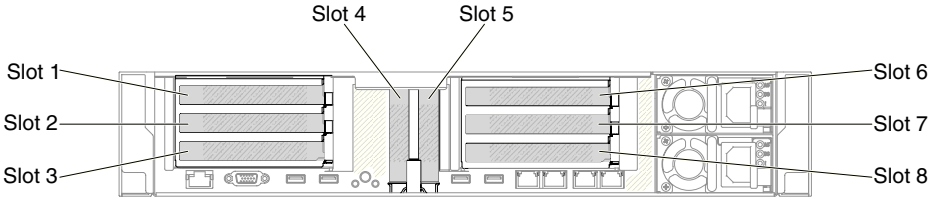


*Figure 21. PCI riser-card adapter expansion slot locations*

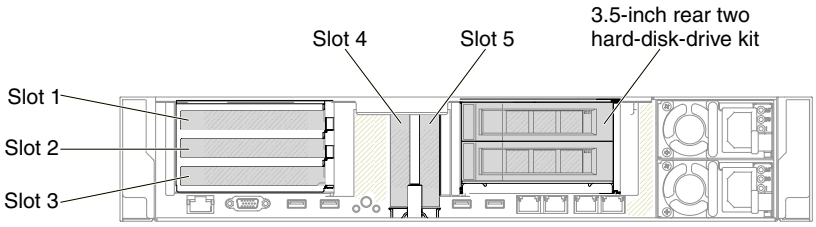


*Figure 22. PCI riser-card adapter expansion slot locations*

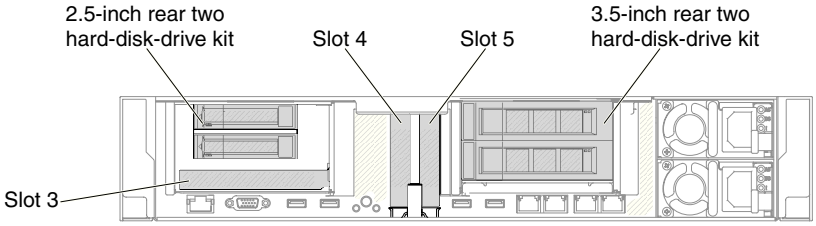


*Figure 23. PCI riser-card adapter expansion slot locations*

## Server components

The following illustration shows the major components in the server.

The illustrations in this document might differ slightly from your hardware.

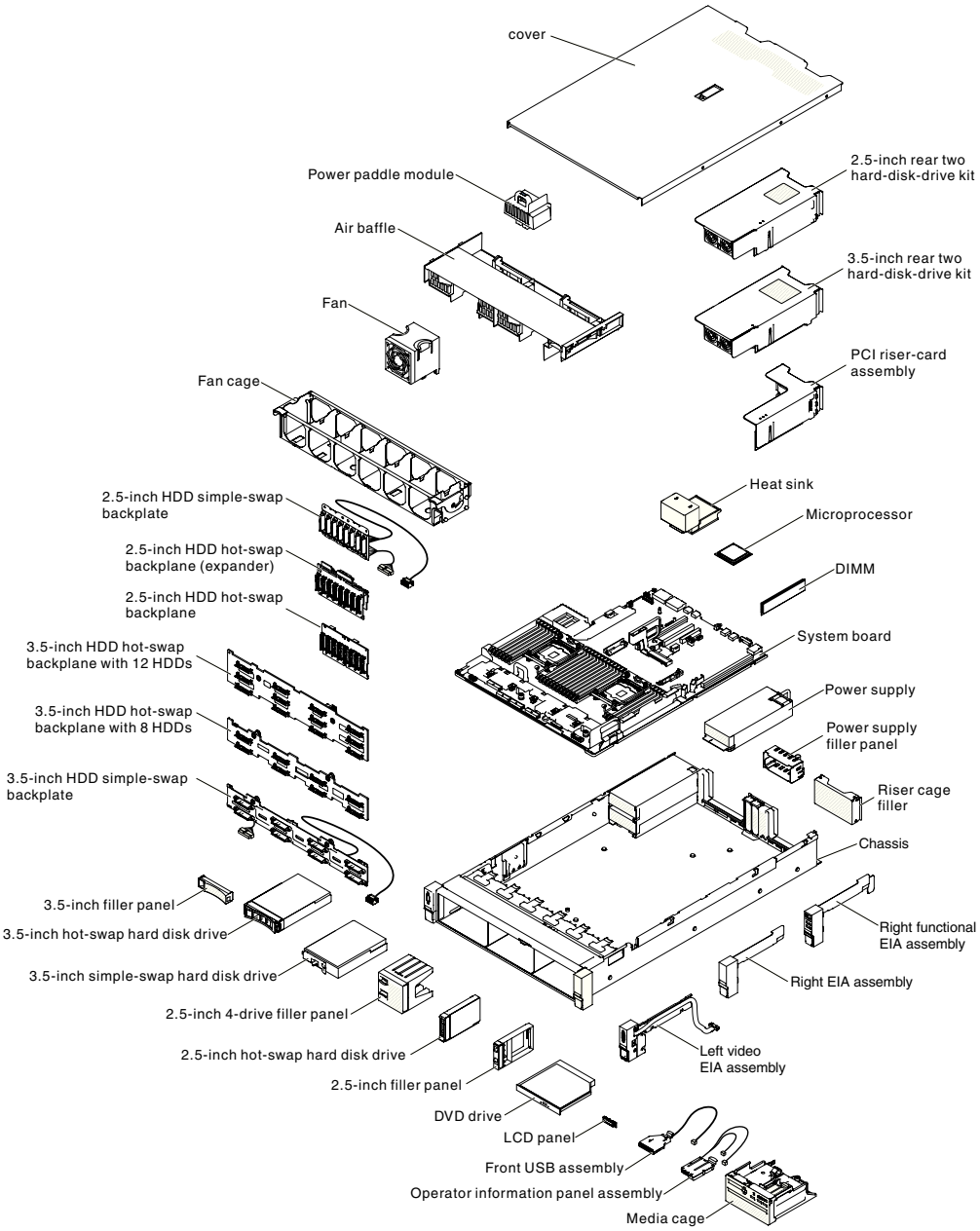


*Figure 24. Server components*

Blue on a component indicates touch points, where you can grip the component to remove it from or install it in the server, open or close a latch, and so on.

Orange on a component or an orange label on or near a component indicates that the component can be hot-swapped, which means that if the server and operating system support hot-swap capability, you can remove or install the component while the server is running. (Orange can also indicate touch points on hot-swap components.) See the instructions for removing or installing a specific hot-swap component for any additional procedures that you might have to perform before you remove or install the component.

## System-board internal connectors

The following illustration shows the internal connectors on the system board.

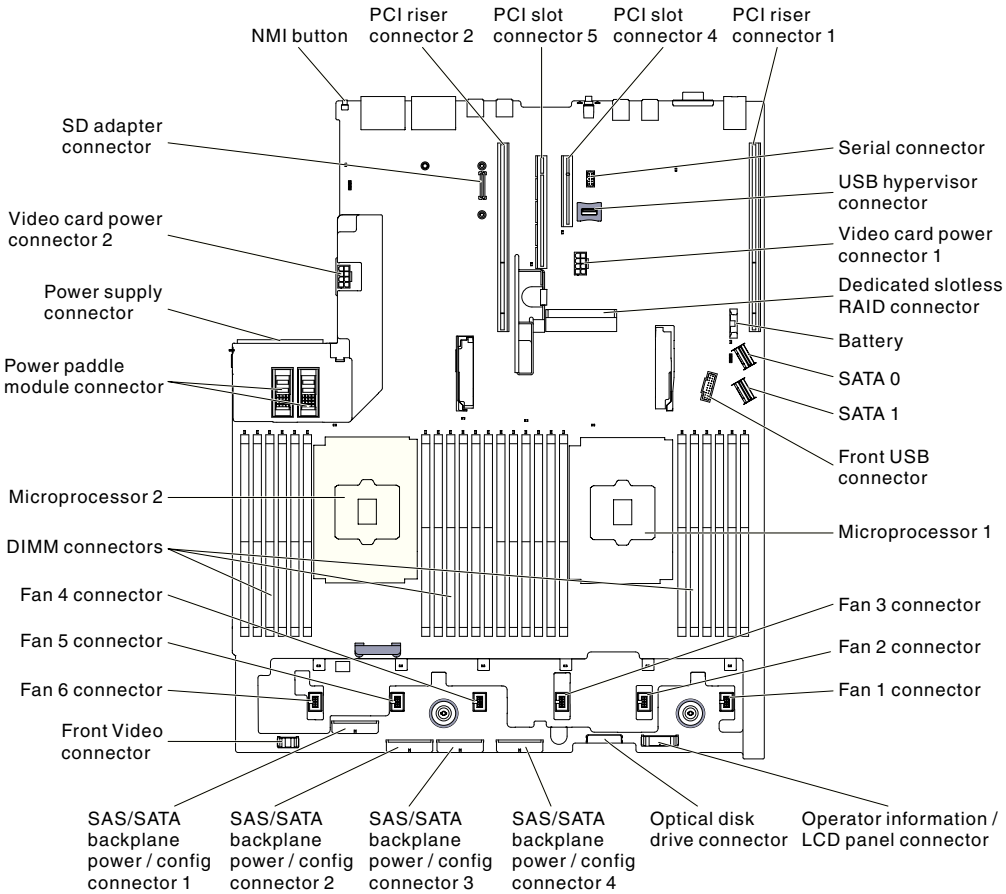


*Figure 25. System-board internal connectors*

## System-board external connectors

The following illustration shows the external connectors on the system board.

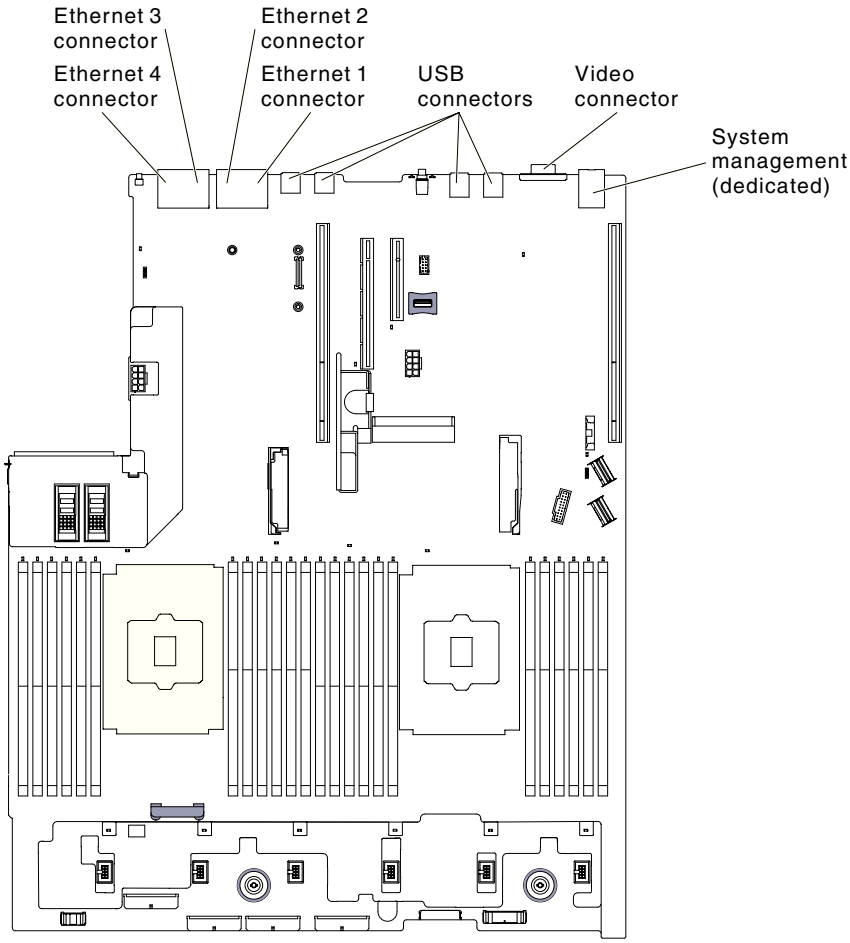


*Figure 26. System-board external connectors*

## System-board switches, jumpers, and buttons

The following illustration shows the location of the switches, jumpers, and buttons on the server.

**Note:** If there is a clear protective sticker on the top of the switch blocks, you must remove and discard it to access the switches.

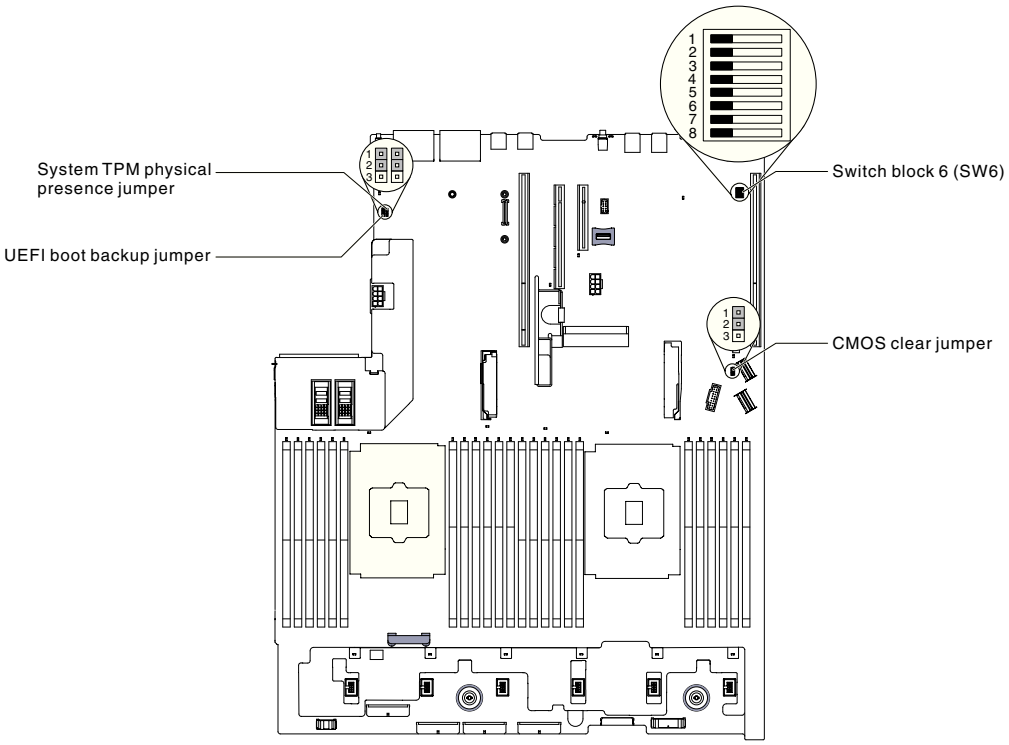


*Figure 27. System-board switches, jumpers, and buttons*

The following table describes the jumpers on the system board.

*Table 1. System board jumpers*

| Jumper number | Jumper name | Jumper setting |
|---|---|---|
| J7 | System TPM physical presence jumper | • Pins 1 and 2: Normal (default).<br>• Pins 2 and 3: Indicates a physical presence to the system TPM. |
| J11 | CMOS clear jumper | • Pins 1 and 2: Normal (default).<br>• Pins 2 and 3: Clears the real-time clock (RTC) registry. |
| J15 | UEFI boot backup jumper | • Pins 1 and 2: Normal (default). Loads the primary server firmware ROM page.<br>• Pins 2 and 3: Loads the secondary (backup) server firmware ROM page. |

**Notes:**

1. If no jumper is present, the server responds as if the pins are set to the default.
2. Changing the position of the UEFI boot backup jumper (J15) from pins 1 and 2 to pins 2 and 3 before the server is turned on alters which flash ROM page is loaded. Do not change the jumper pin position after the server is turned on. This can cause an unpredictable problem.

The following table describes the functions of the SW6 switch block on the system board.

*Table 2. System board SW6 switch block definition*

| Switch number | Default position | Description |
|---|---|---|
| 1 | Off | Reserved. |
| 2 | Off | Power-on password override. Changing the position of this switch bypasses the power-on password check the next time the server is turned on and starts the Setup utility so that you can change or delete the power-on password. You do not have to move the switch back to the default position after the power-on password in overridden.<br><br>Changing the position of this switch does not affect the administrator password check if an administrator password is set.<br><br>See "Passwords" on page 53 for additional information about passwords. |
| 3 | Off | Reserved. |
| 4 | Off | Reserved. |
| 5 | Off | Reserved. |
| 6 | Off | Reserved. |

**Important:**

1. Before you change any switch settings or move any jumpers, turn off the server; then, disconnect all power cords and external cables. Review the information in "Safety" on page vii, "Installation guidelines" on page 283, "Handling static-sensitive devices" on page 285, and "Turning off the server" on page 40.
2. Any system-board switch or jumper block that is not shown in the illustrations in this document are reserved.

The following table describes the functions of the button on the system board.

*Table 3. Button on the server*

| Button name | Function |
|---|---|
| Force NMI button | This button is on the rear of the server. Press this button to force a nonmaskable interrupt to the microprocessor. You might have to use a pen or the end of a straightened paper clip to press the button. You can also use it to force a blue-screen memory dump (use this button only when you are directed to do so by IBM Support). |

## System-board LEDs

The following illustration shows the light-emitting diodes (LEDs) on the system board.

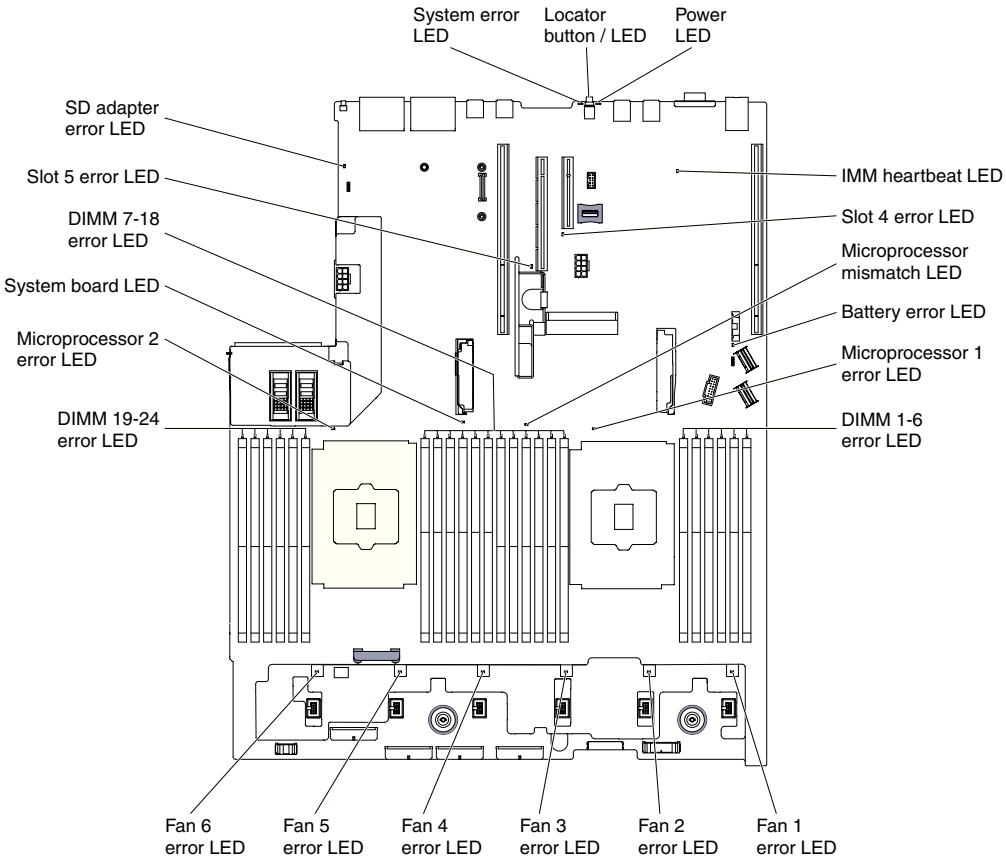


*Figure 28. System-board LEDs*

## Riser-card adapter expansion slot connectors

The following illustration shows the respective expansion slot connectors.

- Riser-card assembly 1
  - Type 1 PCI riser card

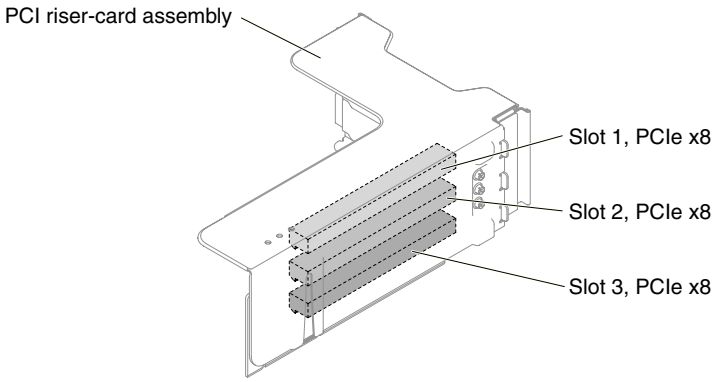


*Figure 29. Type 1 PCI riser card*

– Type 2 PCI riser card

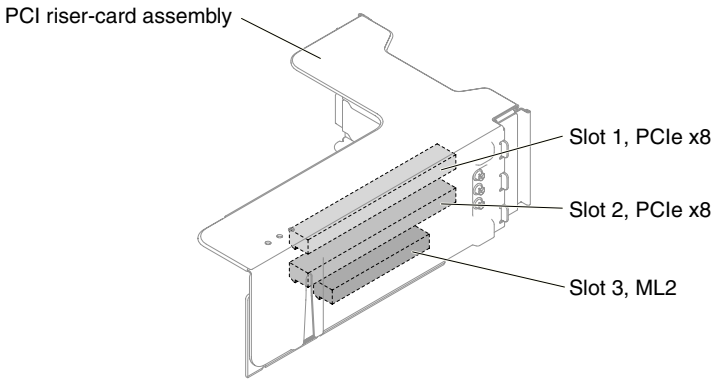


*Figure 30. Type 2 PCI riser card*

– Type 3 PCI riser card

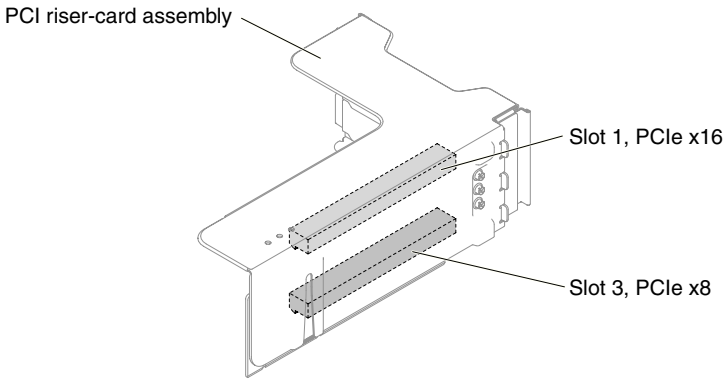


*Figure 31. Type 3 PCI riser card*

– Type 4 PCI riser card

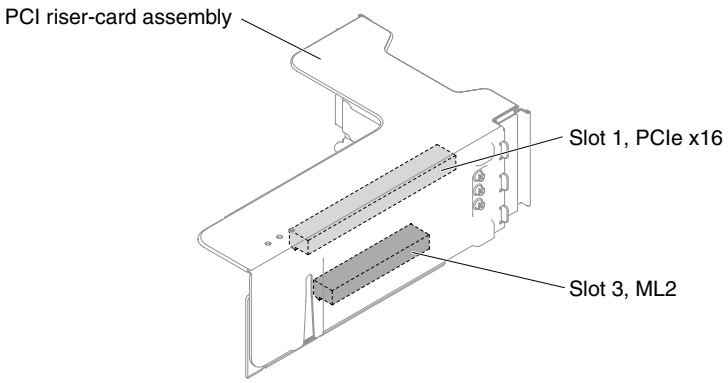


*Figure 32. Type 4 PCI riser card*

- Riser-card assembly 2
  – Type 5 PCI riser card

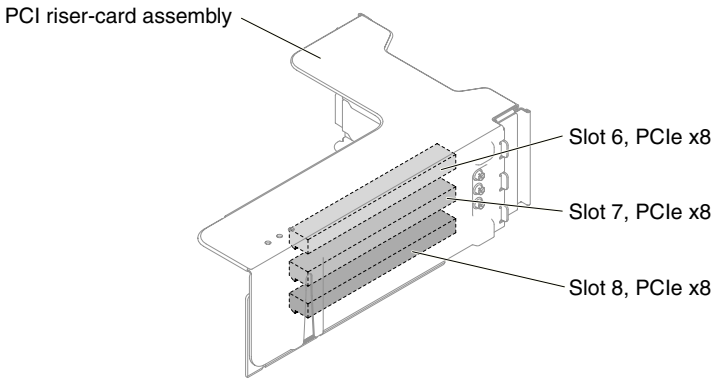


*Figure 33. Type 5 PCI riser card*

– Type 6 PCI riser card

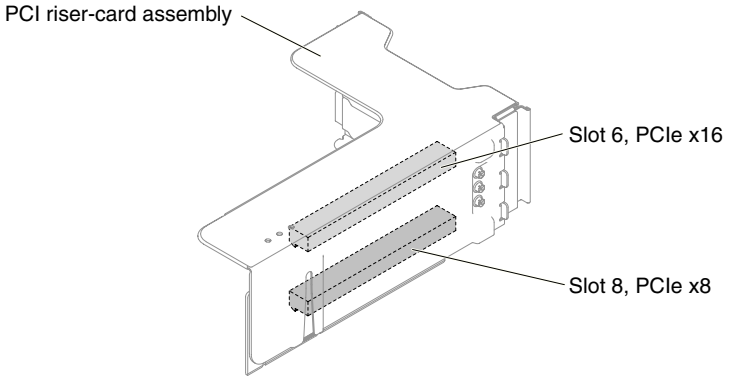


*Figure 34. Type 6 PCI riser card*

## Riser-card assembly LEDs

The following illustration shows the light-emitting diodes (LEDs) on the PCI riser-card assembly.

**Note:** Error LEDs remain lit only while the server is connected to power.

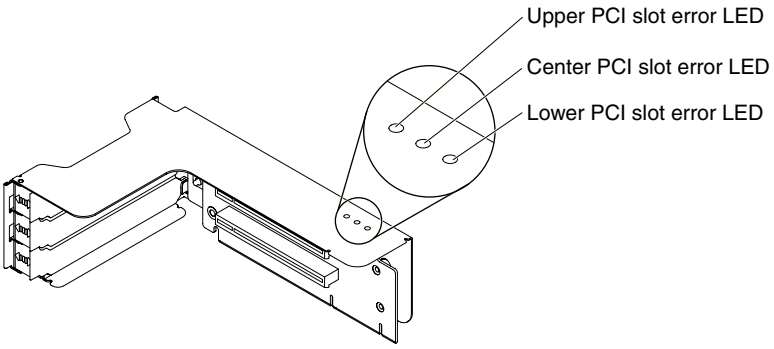


*Figure 35. Riser-card assembly LEDs*

## 2.5-inch/3.5-inch simple-swap/hot-swap hard disk drive backplate assemblies and backplanes

The following illustration shows the respective 2.5-inch/3.5-inch simple-swap/hot-swap hard disk drive backplate assemblies and backplanes.

- 2.5-inch simple-swap hard disk drive backplate assembly
  - Type 1

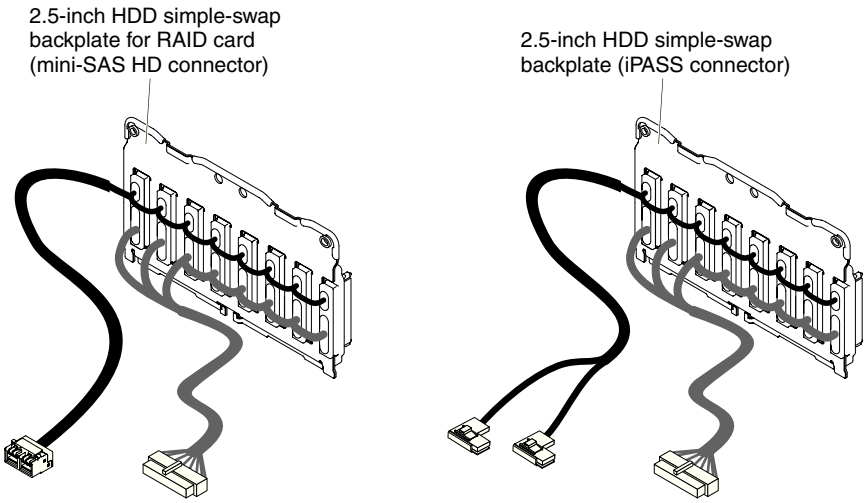


*Figure 36. Type 1*

- 2.5-inch hot-swap hard disk drive backplanes
  - Type 2

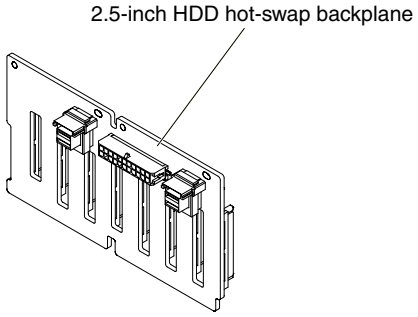


*Figure 37. Type 2*

  - Type 3

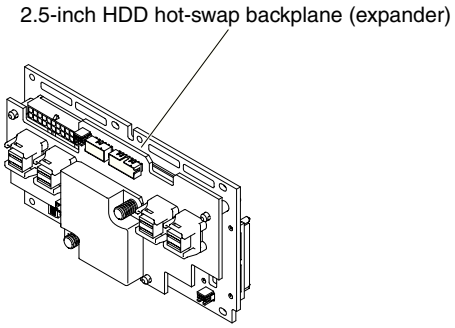


*Figure 38. Type 3*

- 3.5-inch simple-swap hard disk drive backplate assembly
  - Type 4

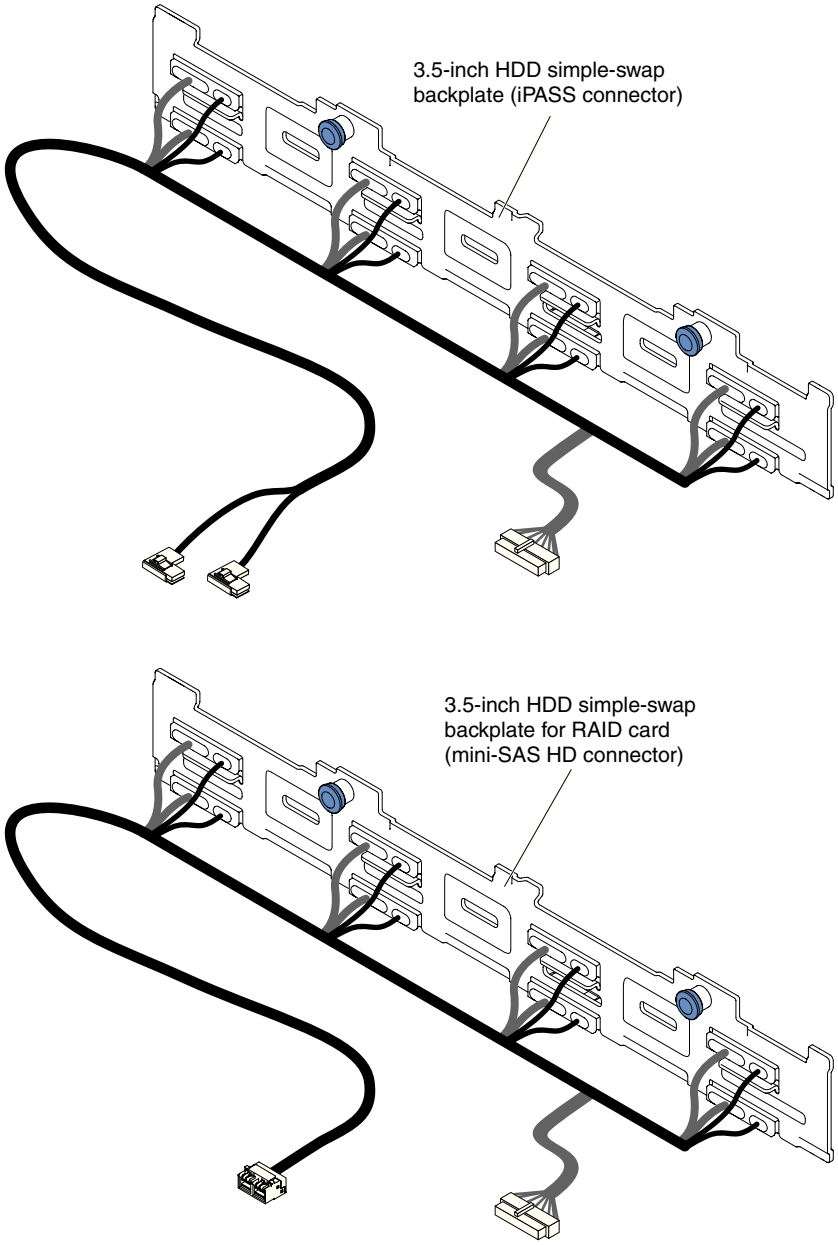


*Figure 39. Type 4*

- 3.5-inch hot-swap hard disk drive backplanes
  - Type 5

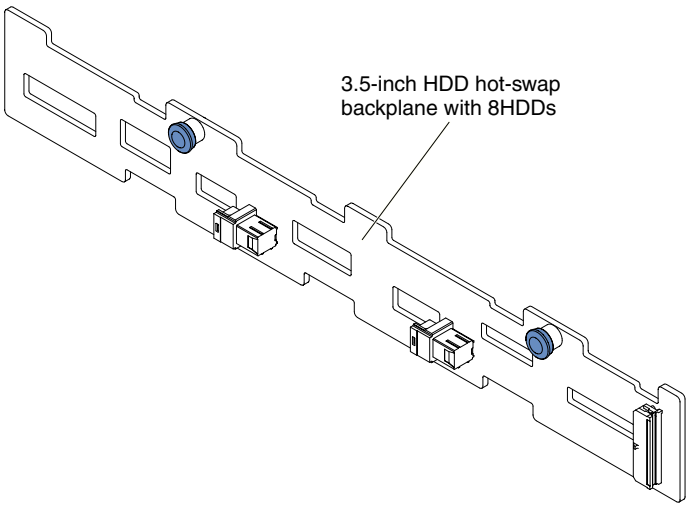


*Figure 40. Type 5*

– Type 6

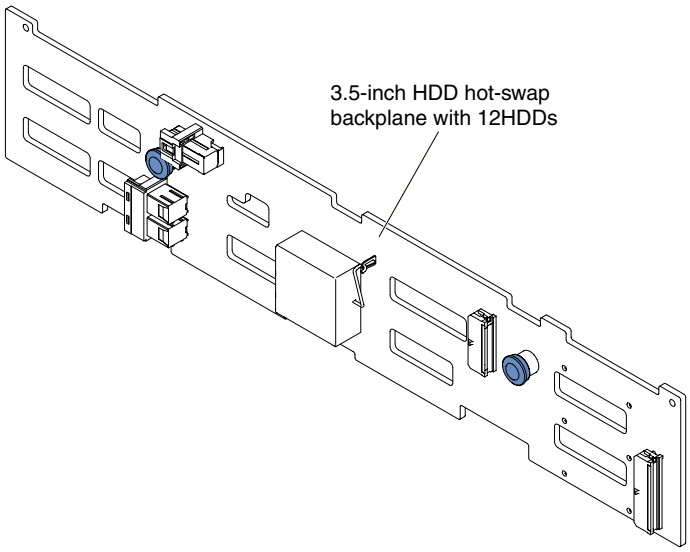


*Figure 41. Type 6*

## Server power features

When the server is connected to an ac power source but is not turned on, the operating system does not run, and all core logic except for the integrated management module II (IMM2) is shut down.

However, the server can respond to requests from IMM2, such as a remote request to turn on the server. The power-on LED flashes to indicate that the server is connected to an ac power source but is not turned on.

### Turning on the server

Use this information to turn on the server.

Approximately 5 seconds after the server is connected to power, one or more fans might start running to provide cooling while the server is connected to power and the power-on button LED will blink quickly. Approximately 5 to 10 seconds after the server is connected to power, the power-control button becomes active (the power-on LED will blink slowly), and one or more fans might start running to provide cooling while the server is connected to power. You can turn on the server by pressing the power-control button.

The server can also be turned on in any of the following ways:

- If a power failure occurs while the server is turned on, the server will restart automatically when power is restored.
- If your operating system supports the Wake on LAN feature, the Wake on LAN feature can turn on the server.

**Notes:**

1. When 4 GB or more of memory (physical or logical) is installed, some memory is reserved for various system resources and is unavailable to the operating system. The amount of memory that is reserved for system resources depends on the operating system, the configuration of the server, and the configured PCI options.
2. Ethernet 1 connector supports Wake on LAN feature.
3. When you turn on the server with the graphical adapters installed, the IBM logo displays on the screen after approximately 3 minutes. This is normal operation while the system loads.

### Turning off the server

Use this information to turn off the server.

When you turn off the server and leave it connected to power, the server can respond to requests to the service processor, such as a remote request to turn on the server. While the server remains connected to power, one or more fans might continue to run. To remove all power from the server, you must disconnect it from the power source.

Some operating systems require an orderly shutdown before you turn off the server. See your operating-system documentation for information about shutting down the operating system.

### Statement 5

**CAUTION:**
**The power control button on the device and the power switch on the power supply do not turn off the electrical current supplied to the device. The device also might have more than one power cord. To remove all electrical current from the device, ensure that all power cords are disconnected from the power source.**

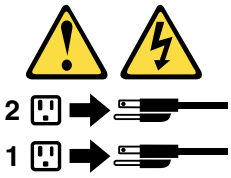


The server can be turned off in any of the following ways:

- You can turn off the server from the operating system, if your operating system supports this feature. After an orderly shutdown of the operating system, the server will turn off automatically.
- You can press the power-control button to start an orderly shutdown of the operating system and turn off the server, if your operating system supports this feature.
- If the operating system stops functioning, you can press and hold the power-control button for more than 4 seconds to turn off the server.
- The server can be turned off by Wake on LAN feature with the following limitation:

  **Note:** When you install any PCI adapter, the power cords must be disconnected from the power source before you remove the PCI Express riser-card assembly. Otherwise, the Wake on LAN feature might not work.
- The Integrated Management Module II (IMM2) can turn off the server as an automatic response to a critical system failure.

# Chapter 2. Configuration information and instructions

This chapter provides information about updating the firmware and using the configuration utilities.

## Updating the firmware

Use this information to update the firmware.

**Important:**

1. Some cluster solutions require specific code levels or coordinated code updates. If the device is part of a cluster solution, verify that the latest level of code is supported for the cluster solution before you update the code.
2. Before you update the firmware, be sure to back up any data that is stored in the Trusted Platform Module (TPM), in case any of the TPM characteristics are changed by the new firmware. For instructions, see your encryption software documentation.
3. Installing the wrong firmware or device-driver update might cause the server to malfunction. Before you install a firmware or device-driver update, read any readme and change history files that are provided with the downloaded update. These files contain important information about the update and the procedure for installing the update, including any special procedure for updating from an early firmware or device-driver version to the latest version.

You can install code updates that are packaged as an Update*Xpress* System Pack or Update*Xpress* CD image. An Update*Xpress* System Pack contains an integration-tested bundle of online firmware and device-driver updates for your server. Use Update*Xpress* System Pack Installer to acquire and apply Update*Xpress* System Packs and individual firmware and device-driver updates. For additional information and to download the Update*Xpress* System Pack Installer, go to the ToolsCenter for System x and BladeCenter at http://www.ibm.com/support/entry/portal/docdisplay?lndocid=TOOL-CENTER and click **UpdateXpress System Pack Installer**.

When you click an update, an information page is displayed, including a list of the problems that the update fixes. Review this list for your specific problem; however, even if your problem is not listed, installing the update might solve the problem.

Be sure to separately install any listed critical updates that have release dates that are later than the release date of the Update*Xpress* System Pack or Update*Xpress* image.

The firmware for the server is periodically updated and is available for download on the IBM website. To check for the latest level of firmware, such as the UEFI firmware, device drivers, and integrated management module (IMM) firmware, go to http://www.ibm.com/support/fixcentral/.

Download the latest firmware for the server; then, install the firmware, using the instructions that are included with the downloaded files.

© Copyright IBM Corp. 2014

When you replace a device in the server, you might have to update the firmware that is stored in memory on the device or restore the pre-existing firmware from a CD or DVD image.

The following list indicates where the firmware is stored:

- UEFI firmware is stored in ROM on the system board.
- IMM2 firmware is stored in ROM on the system board.
- Ethernet firmware is stored in ROM on the Ethernet controller and on the system board.
- ServeRAID firmware is stored in ROM on the system board and the RAID adapter (if one is installed).
- SAS/SATA firmware is stored in ROM on the SAS/SATA controller on the system board.

## Configuring the server

The following configuration programs come with the server:

- **Setup utility**

  The Setup utility is part of the UEFI firmware. Use it to perform configuration tasks such as changing interrupt request (IRQ) settings, changing the startup-device sequence, setting the date and time, and setting passwords. For information about using this program, see "Using the Setup utility" on page 48.
- **Boot Manager program**

  The Boot Manager is part of the UEFI firmware. Use it to override the startup sequence that is set in the Setup utility and temporarily assign a device to be first in the startup sequence. For more information about using this program, see "Using the Boot Manager" on page 55.
- **IBM *ServerGuide Setup and Installation* CD**

  The ServerGuide program provides software-setup tools and installation tools that are designed for the server. Use this CD during the installation of the server to configure basic hardware features, such as an integrated SAS/SATA controller with RAID capabilities, and to simplify the installation of your operating system. For information about using this CD, see "Using the ServerGuide Setup and Installation CD" on page 46.
- **IBM FastSetup**

  IBM FastSetup is a no-cost software tool that helps simplify the maintenance and deployment of selected IBM BladeCenter chassis, servers, and components. The intuitive graphical interface initializes all phases of server setup, including discovery, update, and configuration. Features include templates that enable replication of settings to many servers and automation that reduces hands-on time and user errors. Wizards and other default settings enable customization capabilities. The low-touch, set-once and walk-away feature reduces the hands-on server setup time from days to minutes, particularly for larger deployments. For information about this tool, see http://www.ibm.com/support/entry/portal/docdisplay?brand=5000008&Indocid=TOOL-FASTSET.
- **Integrated management module**

  Use the integrated management module II (IMM2) for configuration, to update the firmware and sensor data record/field replaceable unit (SDR/FRU) data, and to remotely manage a network. For information about using the IMM, see "Using the integrated management module" on page 56 and the *Integrated Management Module II User's Guide* at http://www.ibm.com/support/entry/portal/docdisplay?lndocid=MIGR-5086346.

- **VMware ESXi embedded hypervisor**

  An optional USB flash device with VMware ESXi embedded hypervisor software is available for purchase. Hypervisor is virtualization software that enables multiple operating systems to run on a host system at the same time. The USB embedded hypervisor flash device can be installed in USB connectors 3 and 4 on the system board. For more information about using the embedded hypervisor, see "Using the embedded hypervisor" on page 60.

- **Remote presence capability and blue-screen capture**

  The remote presence and blue-screen capture features are integrated functions of the integrated management module (IMM2). The remote presence feature provides the following functions:

  – Remotely viewing video with graphics resolutions up to 1600 x 1200 at 75 Hz, regardless of the system state
  – Remotely accessing the server, using the keyboard and mouse from a remote client
  – Mapping the CD or DVD drive, diskette drive, and USB flash drive on a remote client, and mapping ISO and diskette image files as virtual drives that are available for use by the server
  – Uploading a diskette image to the IMM memory and mapping it to the server as a virtual drive

  The blue-screen capture feature captures the video display contents before the IMM restarts the server when the IMM detects an operating-system hang condition. A system administrator can use the blue-screen capture feature to assist in determining the cause of the hang condition. For more information, see "Using the remote presence and blue-screen capture features" on page 57.

- **Ethernet controller configuration**

  For information about configuring the Ethernet controller, see "Configuring the Ethernet controller" on page 61.

- **Features on Demand software Ethernet software**

  The server provides Features on Demand software Ethernet support. You can purchase a Features on Demand software upgrade key for Fibre Channel over Ethernet (FCoE) and iSCSI storage protocols. For more information, see "Enabling Features on Demand Ethernet software" on page 61.

- **Features on Demand software RAID software**

  The server provides Features on Demand software RAID support. You can purchase a Features on Demand software upgrade key for RAID. For more information, see "Enabling Features on Demand RAID software" on page 61.

- **IBM Advanced Settings Utility (ASU) program**

  Use this program as an alternative to the Setup utility for modifying UEFI settings and IMM settings. Use the ASU program online or out of band to modify UEFI settings from the command line without the need to restart the server to run the Setup utility. For more information about using this program, see "IBM Advanced Settings Utility program" on page 62.

- **Configuring RAID arrays**

  For information about configuring RAID arrays, see "Configuring RAID arrays" on page 61.

  The following table lists the different server configurations and the applications that are available for configuring and managing RAID arrays.

*Table 4. Server configuration and applications for configuring and managing RAID arrays*

| Server configuration | RAID array configuration (before operating system is installed) | RAID array management (after operating system is installed) |
|---|---|---|
| ServeRAID-M5110 adapter | MegaRAID BIOS Configuration Utility (press Ctrl+H to start), pre-boot CLI (press Ctrl+P to start), ServerGuide, HII | MegaRAID Storage Manager (MSM), MegaCLI, and IBM Director |
| ServeRAID-M5120 adapter | MegaRAID BIOS Configuration Utility (press Ctrl+H to start), pre-boot CLI (press Ctrl+P to start), ServerGuide, HII | MegaRAID Storage Manager (MSM), MegaCLI, and IBM Director |

**Notes:**

1. For more information about the Human Interface Infrastructure (HII) and SAS2IRCU, go to http://www.ibm.com/support/entry/portal/docdisplay?lndocid=MIGR-5088601.
2. For more information about the MegaRAID, go to http://www.ibm.com/support/entry/portal/docdisplay?lndocid=MIGR-5073015.

## Using the ServerGuide Setup and Installation CD

Use this information as an overview for using the ServerGuide Setup and Installation CD.

The *ServerGuide Setup and Installation* CD provides software setup tools and installation tools that are designed for your server. The ServerGuide program detects the server model and optional hardware devices that are installed and uses that information during setup to configure the hardware. The ServerGuide simplifies the operating-system installations by providing updated device drivers and, in some cases, installing them automatically.

You can download a free image of the *ServerGuide Setup and Installation CD* from http://www.ibm.com/support/entry/portal/docdisplay?lndocid=SERV-GUIDE.

In addition to the *ServerGuide Setup and Installation* CD, you must have your operating-system CD to install the operating system.

## ServerGuide features

This information provides an overview of the ServerGuide features.

Features and functions can vary slightly with different versions of the ServerGuide program. To learn more about the version that you have, start the *ServerGuide Setup and Installation* CD and view the online overview. Not all features are supported on all server models.

The ServerGuide program performs the following features:

- An easy-to-use interface
- Diskette-free setup, and configuration programs that are based on detected hardware
- Device drivers that are provided for the server model and detected hardware
- Operating-system partition size and file-system type that are selectable during setup

The ServerGuide program performs the following tasks:

- Sets system date and time
- Detects installed hardware options and provides updated device drivers for most adapters and devices
- Provides diskette-free installation for supported Windows operating systems
- Includes an online readme file with links to tips for your hardware and operating-system installation

## Setup and configuration overview

ServerGuide setup and configuration overview

When you use the *ServerGuide Setup and Installation* CD, you do not need setup diskettes. You can use the CD to configure any supported IBM server model. The setup program provides a list of tasks that are required to set up your server model. On a server with a ServeRAID adapter or SAS/SATA controller with RAID capabilities, you can run the SAS/SATA RAID configuration program to create logical drives.

**Note:** Features and functions can vary slightly with different versions of the ServerGuide program.

## Typical operating-system installation

ServerGuide typical operating-system installation

The ServerGuide program can reduce the time it takes to install an operating system. It provides the device drivers that are required for your hardware and for the operating system that you are installing. This section describes a typical ServerGuide operating-system installation.

**Note:** Features and functions can vary slightly with different versions of the ServerGuide program.

1. After you have completed the setup process, the operating-system installation program starts. (You will need your operating-system CD to complete the installation.)
2. The ServerGuide program stores information about the server model, service processor, hard disk drive controllers, and network adapters. Then, the program checks the CD for newer device drivers. This information is stored and then passed to the operating-system installation program.

3. The ServerGuide program presents operating-system partition options that are based on your operating-system selection and the installed hard disk drives.
4. The ServerGuide program prompts you to insert your operating-system CD and restart the server. At this point, the installation program for the operating system takes control to complete the installation.

### Installing your operating system without using ServerGuide

Use this information to install the operating system on the server without using ServerGuide.

If you have already configured the server hardware and you are not using the ServerGuide program to install your operating system, you can download operating-system installation instructions for the server from http://www.ibm.com/supportportal/.

## Using the Setup utility

Use these instructions to start the Setup utility.

Use the Unified Extensible Firmware Interface (UEFI) Setup Utility program to perform the following tasks:

- View configuration information
- View and change assignments for devices and I/O ports
- Set the date and time
- Set and change passwords
- Set the startup characteristics of the server and the order of startup devices
- Set and change settings for advanced hardware features
- View, set, and change settings for power-management features
- View and clear error logs
- Change interrupt request (IRQ) settings
- Resolve configuration conflicts

### Starting the Setup utility

Use this information to start up the Setup utility.

#### About this task

To start the Setup utility, complete the following steps:

#### Procedure

1. Turn on the server.

   **Note:** Approximately 5 to 10 seconds after the server is connected to power, the power-control button becomes active.
2. When the prompt `<F1> Setup` is displayed, press F1. If you have set an administrator password, you must type the administrator password to access the full Setup utility menu. If you do not type the administrator password, a limited Setup utility menu is available.
3. Select settings to view or change.

## Setup utility menu choices

Use the Setup utility main menu to view and configure server configuration data and settings.

The following choices are on the Setup utility main menu for the UEFI. Depending on the version of the firmware, some menu choices might differ slightly from these descriptions.

- **System Information**

  Select this choice to view information about the server. When you make changes through other choices in the Setup utility, some of those changes are reflected in the system information; you cannot change settings directly in the system information. This choice is on the full Setup utility menu only.

  – **System Summary**

    Select this choice to view configuration information, including the ID, speed, and cache size of the microprocessors, machine type and model of the server, the serial number, the system UUID, and the amount of installed memory. When you make configuration changes through other options in the Setup utility, the changes are reflected in the system summary; you cannot change settings directly in the system summary.

  – **Product Data**

    Select this choice to view the system-board identifier, the revision level or issue date of the firmware, the integrated management module and diagnostics code, and the version and date.

  This choice is on the full Setup utility menu only.

- **System Settings**

  Select this choice to view or change the server component settings.

  – **Adapters and UEFI Drivers**

    Select this choice to view information about the UEFI 1.10 and UEFI 2.0 compliant adapters and drivers installed in the server.

  – **Processors**

    Select this choice to view or change the processor settings.

  – **Memory**

    Select this choice to view or change the memory settings.

  – **Devices and I/O Ports**

    Select this choice to view or change assignments for devices and input/output (I/O) ports. You can configure the serial ports, configure remote console redirection, enable or disable integrated Ethernet controllers, the SAS/SATA controllers, SATA optical drive channels, PCI slots, and video controller. If you disable a device, it cannot be configured, and the operating system will not be able to detect it (this is equivalent to disconnecting the device).

  – **Power**

    Select this choice to view or change power capping to control consumption, processors, and performance states.

  – **Operating Modes**

    Select this choice to view or change the operating profile (performance and power utilization).

  – **Legacy Support**

    Select this choice to view or set legacy support.

    - **Force Legacy Video on Boot**

Select this choice to force INT video support, if the operating system does not support UEFI video output standards.

- **Rehook INT 19h**

  Select this choice to enable or disable devices from taking control of the boot process. The default is **Disable**.

- **Legacy Thunk Support**

  Select this choice to enable or disable UEFI to interact with PCI mass storage devices that are non-UEFI compliant. The default is **Enable**.

- **Infinite Boot Retry**

  Select this choice to enable or disable UEFI to infinitely retry the legacy boot order. The default is **Disable**.

- **BBS Boot**

  Select this choice to enable or disable legacy boot in BBS manner. The default is **Enable**.

– **System Security**

Select this choice to view or configure Trusted Platform Module (TPM) support.

– **Integrated Management Module**

Select this choice to view or change the settings for the integrated management module.

- **Power Restore Policy**

  Select this choice to set the mode of operation after the power lost.

- **Commands on USB Interface**

  Select this choice to enable or disable the Ethernet over USB interface on IMM. The default is **Enable**.

- **Network Configuration**

  Select this choice to view the system management network interface port, the IMM MAC address, the current IMM IP address, and host name; define the static IMM IP address, subnet mask, and gateway address, specify whether to use the static IP address or have DHCP assign the IMM2 IP address, save the network changes, and reset the IMM.

- **Reset IMM to Defaults**

  Select this choice to view or reset IMM to the default settings.

- **Reset IMM**

  Select this choice to reset IMM.

– **Recovery**

Select this choice to view or change the system recovery parameters.

- **POST Attempts**

  Select this choice to view or change the number of attempts to POST.

  • **POST Attempts Limit**

    Select this choice to view or change the Nx boot failure parameters.

- **System Recovery**

  Select this choice to view or change system recovery settings.

  • **POST Watchdog Timer**

    Select this choice to view or enable the POST watchdog timer.

  • **POST Watchdog Timer Value**

    Select this choice to view or set the POST loader watchdog timer value.

- **Reboot System on NMI**

  Select this choice to enable or disable restarting the system whenever a nonmaskable interrupt (NMI) occurs. **Enable** is the default.

- **Halt on Severe Error**

  Select this choice to enable or disable the system from booting into OS, displaying the POST event viewer whenever a severe error was detected. **Disable** is the default.

– **Storage**

  Select this choice to view or change the storage device settings.

– **Network**

  Select this choice to view or change the network device options, such as iSCSI.

– **Drive Health**

  Select this choice to view the status of the controllers installed in the blade server.

- **Date and Time**

  Select this choice to set the date and time in the server, in 24-hour format (*hour*:*minute*:*second*).

  This choice is on the full Setup utility menu only.

- **Start Options**

  Select this choice to view or change the start options, including the startup sequence, keyboard NumLock state, PXE boot option, and PCI device boot priority. Changes in the startup options take effect when you start the server.

  The startup sequence specifies the order in which the server checks devices to find a boot record. The server starts from the first boot record that it finds. If the server has Wake on LAN hardware and software and the operating system supports Wake on LAN functions, you can specify a startup sequence for the Wake on LAN functions. For example, you can define a startup sequence that checks for a disc in the CD-RW/DVD drive, then checks the hard disk drive, and then checks a network adapter.

  This choice is on the full Setup utility menu only.

- **Boot Manager**

  Select this choice to view, add, delete, or change the device boot priority, boot from a file, select a one-time boot, or reset the boot order to the default setting.

- **System Event Logs**

  Select this choice to enter the System Event Manager, where you can view the POST event log and the system-event log. You can use the arrow keys to move between pages in the error log. This choice is on the full Setup utility menu only.

  The POST event log contains the most recent error codes and messages that were generated during POST.

  The system-event log contains POST and system management interrupt (SMI) events and all events that are generated by the baseboard management controller that is embedded in the integrated management module (IMM).

  **Important:** If the system-error LED on the front of the server is lit but there are no other error indications, clear the system-event log. Also, after you complete a repair or correct an error, clear the system-event log to turn off the system-error LED on the front of the server.

  – **POST Event Viewer**

Select this choice to enter the POST event viewer to view the POST error messages.

- **System Event Log**

  Select this choice to view the system event log.

- **Clear System Event Log**

  Select this choice to clear the system event log.

- **User Security**

  Select this choice to set, change, or clear passwords. See “Passwords” on page 53 for more information.

  This choice is on the full and limited Setup utility menu.

  - **Set Power-on Password**

    Select this choice to set or change a power-on password. See “Power-on password” on page 53 for more information.

  - **Clear Power-on Password**

    Select this choice to clear a power-on password. See “Power-on password” on page 53 for more information.

  - **Set Administrator Password**

    Select this choice to set or change an administrator password. An administrator password is intended to be used by a system administrator; it limits access to the full Setup utility menu. If an administrator password is set, the full Setup utility menu is available only if you type the administrator password at the password prompt. See “Administrator password” on page 55 for more information.

  - **Clear Administrator Password**

    Select this choice to clear an administrator password. See “Administrator password” on page 55 for more information.

- **Save Settings**

  Select this choice to save the changes that you have made in the settings.

- **Restore Settings**

  Select this choice to cancel the changes that you have made in the settings and restore the previous settings.

- **Load Default Settings**

  Select this choice to cancel the changes that you have made in the settings and restore the factory settings.

- **Exit Setup**

  Select this choice to exit from the Setup utility. If you have not saved the changes that you have made in the settings, you are asked whether you want to save the changes or exit without saving them.

## Passwords

From the **User Security** menu choice, you can set, change, and delete a power-on password and an administrator password.

The **User Security** choice is on the full Setup utility menu only.

If you set only a power-on password, you must type the power-on password to complete the system startup and to have access to the full Setup utility menu.

An administrator password is intended to be used by a system administrator; it limits access to the full Setup utility menu. If you set only an administrator password, you do not have to type a password to complete the system startup, but you must type the administrator password to access the Setup utility menu.

If you set a power-on password for a user and an administrator password for a system administrator, you can type either password to complete the system startup. A system administrator who types the administrator password has access to the full Setup utility menu; the system administrator can give the user authority to set, change, and delete the power-on password. A user who types the power-on password has access to only the limited Setup utility menu; the user can set, change, and delete the power-on password, if the system administrator has given the user that authority.

**Power-on password:**

If a power-on password is set, when you turn on the server, you must type the power-on password to complete the system startup. You can use any combination of 6 - 20 printable ASCII characters for the password.

When a power-on password is set, you can enable the Unattended Start mode, in which the keyboard and mouse remain locked but the operating system can start. You can unlock the keyboard and mouse by typing the power-on password.

If you forget the power-on password, you can regain access to the server in any of the following ways:

- If an administrator password is set, type the administrator password at the password prompt. Start the Setup utility and reset the power-on password.
- Remove the battery from the server, wait 30 seconds, and then reinstall it.
- Change the position of the power-on password switch (switch 2) on the system board switch block (SW6) to bypass the power-on password check (see Table 2 on page 32 for more information).

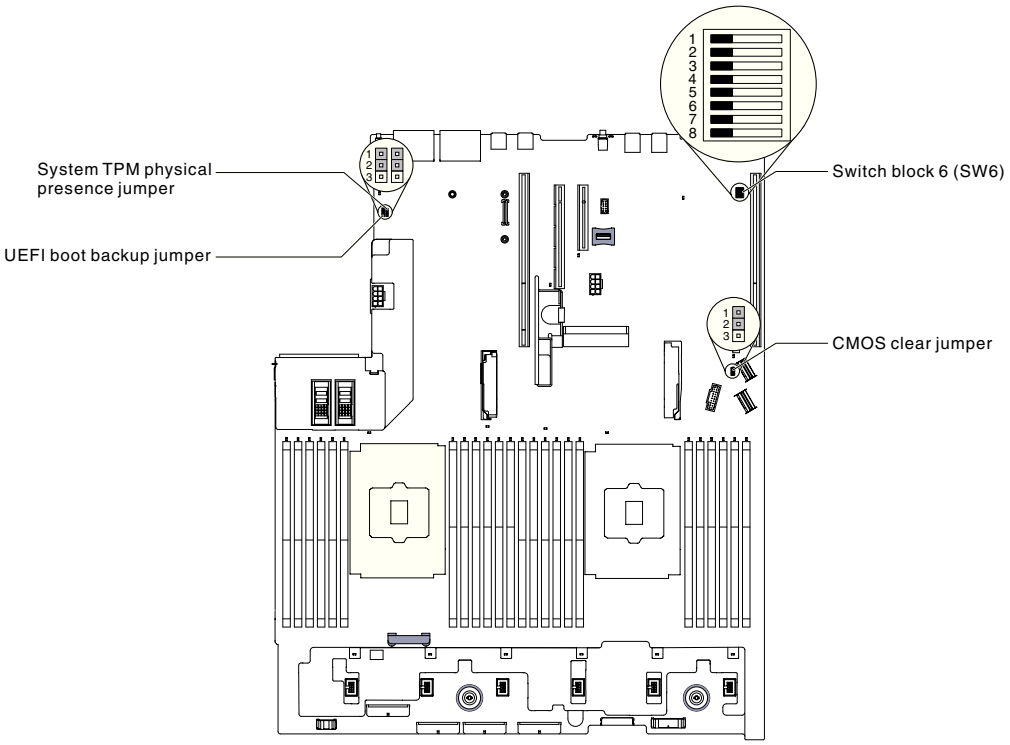


*Figure 42. System-board switches, jumpers, and buttons*

**Attention:** Before you change any switch settings or move any jumpers, turn off the server; then, disconnect all power cords and external cables. See the safety information that begins "Safety" on page vii. Do not change settings or move jumpers on any system-board switch or jumper blocks that are not shown in this document.

The default for all of the switches on switch block SW3 is Off.

While the server is turned off, move power-on password switch (switch 2) on the system board switch block (SW6) to the On position to enable the power-on password override. You can then start the Setup utility and reset the power-on password. You do not have to return the switch to the previous position.

The power-on password override switch does not affect the administrator password.

**Administrator password:**

If an administrator password is set, you must type the administrator password for access to the full Setup utility menu. You can use any combination of 6 to 20 printable ASCII characters for the password.

**Attention:** If you set an administrator password and then forget it, there is no way to change, override, or remove it. You must replace the system board.

## Using the Boot Manager

The Boot Manager program is a built-in, menu-driven configuration utility program that you can use to temporarily redefine the first startup device without changing settings in the Setup utility.

### About this task

To use the Boot Manager program, complete the following steps:

### Procedure

1. Turn off the server.
2. Restart the server.
3. When the prompt `<F12> Select Boot Device` is displayed, press F12.
4. Use the Up arrow and Down arrow keys to select an item from the menu and press Enter.

### Results

The next time the server starts, it returns to the startup sequence that is set in the Setup utility.

## Starting the backup server firmware

The system board contains a backup copy area for the server firmware. This is a secondary copy of the server firmware that you update only during the process of updating the server firmware. If the primary copy of the server firmware becomes damaged, use this backup copy.

To force the server to start from the backup copy, turn off the server; then, place the UEFI boot backup jumper (J15) in the backup position (pins 2 and 3). See "System-board switches, jumpers, and buttons" on page 30 for the location of the UEFI boot backup jumper (J15).

Use the backup copy of the server firmware until the primary copy is restored. After the primary copy is restored, turn off the server; then, move the UEFI boot backup jumper (J15) back to the primary position (pins 1 and 2).

## The Update*Xpress* System Pack Installer

The Update*Xpress* System Pack Installer detects supported and installed device drivers and firmware in the server and installs available updates.

For additional information and to download the Update*Xpress* System Pack Installer, go to the ToolsCenter for System x and BladeCenter at http://publib.boulder.ibm.com/infocenter/toolsctr/v1r0/ and click **UpdateXpress System Pack Installer**.

## Using the integrated management module

The integrated management module (IMM) is a second generation of the functions that were formerly provided by the baseboard management controller hardware. It combines service processor functions, video controller, and remote presence function in a single chip.

The IMM supports the following basic systems-management features:

- Active Energy Manager.
- Alerts (in-band and out-of-band alerting, PET traps - IPMI style, SNMP, e-mail).
- Auto Boot Failure Recovery (ABR).
- Automatic microprocessor disable on failure and restart in a two-microprocessor configuration when one microprocessor signals an internal error. When one of the microprocessors fail, the server will disable the failing microprocessor and restart with the other microprocessor.
- Automatic Server Restart (ASR) when POST is not complete or the operating system hangs and the operating system watchdog timer times-out. The IMM might be configured to watch for the operating system watchdog timer and reboot the system after a timeout, if the ASR feature is enabled. Otherwise, the IMM allows the administrator to generate a nonmaskable interrupt (NMI) by pressing an NMI button on the LCD system information display panel for an operating-system memory dump. ASR is supported by IPMI.
- A virtual media key, which enables remote presence support (remote video, remote keyboard/mouse, and remote storage).
- Boot sequence manipulation.
- Command-line interface.
- Configuration save and restore.
- DIMM error assistance. The Unified Extensible Firmware Interface (UEFI) disables a failing DIMM that is detected during POST, and the IMM lights the associated system error LED and the failing DIMM error LED.
- Environmental monitor with fan speed control for temperature, voltages, fan failure, power supply failure, and power backplane failure.
- Intelligent Platform Management Interface (IPMI) Specification V2.0 and Intelligent Platform Management Bus (IPMB) support.
- Invalid system configuration (CONFIG) LED support.
- LCD system information display panel reports errors that occur with fans, power supplies, microprocessor, hard disk drives, and system errors.
- Local firmware code flash update
- Nonmaskable interrupt (NMI) detection and reporting.
- Operating-system failure blue screen capture.
- PCI configuration data.

- Power/reset control (power-on, hard and soft shutdown, hard and soft reset, schedule power control).
- Query power-supply input power.
- ROM-based IMM firmware flash updates.
- Serial over LAN (SOL).
- Serial port redirection over telnet or ssh.
- SMI handling
- System event log (SEL) - user readable event log.

The IMM also provides the following remote server management capabilities through the ipmitool, a management utility program:

- **Command-line interface (IPMI Shell)**

  The command-line interface provides direct access to server management functions through the IPMI 2.0 protocol. Use the command-line interface to issue commands to control the server power, view system information, and identify the server. You can also save one or more commands as a text file and run the file as a script.
- **Serial over LAN**

  Establish a Serial over LAN (SOL) connection to manage servers from a remote location. You can remotely view and change the UEFI settings, restart the server, identify the server, and perform other management functions. Any standard Telnet client application can access the SOL connection.

For more information about IMM, see the *Integrated Management Module II User's Guide* at http://www.ibm.com/support/entry/portal/docdisplay?lndocid=MIGR-5086346.

## Using the remote presence and blue-screen capture features

The remote presence and blue-screen capture features are integrated functions of the integrated management module II (IMM2).

The remote presence feature provides the following functions:

- Remotely viewing video with graphics resolutions up to 1600 x 1200 at 75 Hz, regardless of the system state
- Remotely accessing the server, using the keyboard and mouse from a remote client
- Mapping the CD or DVD drive, diskette drive, and USB flash drive on a remote client, and mapping ISO and diskette image files as virtual drives that are available for use by the server
- Uploading a diskette image to the IMM memory and mapping it to the server as a virtual drive

The blue-screen capture feature captures the video display contents before the IMM restarts the server when the IMM detects an operating-system hang condition. A system administrator can use the blue-screen capture to assist in determining the cause of the hang condition.

## Obtaining the IMM host name

Use this information to obtain the IMM host name.

### About this task

If you are logging on to the IMM for the first time after installation, the IMM defaults to DHCP. If a DHCP server is not available, the IMM uses a static IP address of 192.168.70.125. The default IPv4 host name is “IMM-” (plus the last 12 characters on the IMM MAC address). The default host name also comes on the IMM network access tag that comes attached to the power supply on the rear of the server. The IMM network access tag provides the default host name of the IMM and does not require you to start the server.

The IPv6 link-local address (LLA) is derived from the IMM default host name. The IMM LLA is on the IMM network access tag is on the power supply on the rear of the server. To derive the link-local address, complete the following steps:

### Procedure

1. Take the last 12 characters on the IMM MAC address (for example, 5CF3FC5EAAD0).
2. Separate the number into pairs of hexadecimal characters (for example, 5C:F3:FC:5E:AA:D0).
3. Separate the first six and last six hexadecimal characters.
4. Add “FF” and “FE” in the middle of the 12 characters (for example, 5C F3 FC FF FE 5E AA D0).
5. Convert the first pair of hexadecimal characters to binary (for example, 5=0101, C=1100, which results in 01011100 F3 FC FF FE 5E AA D0).
6. Flip the 7th binary character from left (0 to 1 or 1 to 0), which results in 01011110 F3 FF FE 5E AA D0.
7. Convert the binary back to hexadecimal (for example, 5E F3FCFFFE5EAAD0).

## Obtaining the IP address for the IMM

Use this information to obtain the IP address for the IMM.

### About this task

To access the web interface to use the remote presence feature, you need the IP address or host name of the IMM. You can obtain the IMM IP address through the Setup utility and you can obtain the IMM host name from the IMM network access tag. The server comes with a default IP address for the IMM of 192.168.70.125.

To obtain the IP address, complete the following steps:

### Procedure

1. Turn off the server.

   **Note:** Approximately 5 to 10 seconds after the server is connected to power, the power-control button becomes active.
2. When the prompt `<F1> Setup` is displayed, press F1. (This prompt is displayed on the screen for only a few seconds. You must press F1 quickly.) If you have set both a power-on password and an administrator password, you must type the administrator password to access the full Setup utility menu.
3. From the Setup utility main menu, select **System Settings**.

4. On the next screen, select **Integrated Management Module**.
5. On the next screen, select **Network Configuration**.
6. Find the IP address and write it down.
7. Exit from the Setup utility.

## Logging on to the web interface

Use this information to log on to the web interface.

### About this task

To log on to the IMM web interface, complete the following steps:

### Procedure

1. On a system that is connected to the server, open a web browser. In the **Address** or **URL** field, type the IP address or host name of the IMM to which you want to connect.

   **Note:** If you are logging on to the IMM for the first time after installation, the IMM defaults to DHCP. If a DHCP host is not available, the IMM assigns a static IP address of 192.168.70.125. The IMM network access tag provides the default host name of the IMM and does not require you to start the server.
2. On the Login page, type the user name and password. If you are using the IMM for the first time, you can obtain the user name and password from your system administrator. All login attempts are documented in the system-event log.

   **Note:** The IMM is set initially with a user name of USERID and password of PASSW0RD (with a zero, not a the letter O). You have read/write access. You must change the default password the first time you log on.
3. Click **Log in** to start the session. The System Status and Health page provides a quick view of the system status.

### Results

**Note:** If you boot to the operating system while in the IMM GUI and the message "Booting OS or in unsupported OS" is displayed under **System Status** > **System State**, disable Windows 2008 or 2012 firewall or type the following command in the Windows 2008 or 2012 console. This might also affect blue-screen capture features.

```
netsh firewall set icmpsetting type=8 mode=ENABLE
```

By default, the icmp packet is blocked by Windows firewall. The IMM GUI will then change to "OS booted" status after you change the setting as indicated above in both the Web and CLI interfaces.

## Using the embedded hypervisor

The VMware ESXi embedded hypervisor software is available on the optional IBM USB flash device with embedded hypervisor.

### About this task

The USB flash device can be installed in USB connectors on the system board (see "System-board internal connectors" on page 29 for the location of the connectors). Hypervisor is virtualization software that enables multiple operating systems to run on a host system at the same time. The USB flash device is required to activate the hypervisor functions.

To start using the embedded hypervisor functions, you must add the USB flash device to the startup sequence in the Setup utility.

To add the USB flash device to the startup sequence, complete the following steps:

### Procedure

1. Turn on the server.

   **Note:** Approximately 5 to 10 seconds after the server is connected to power, the power-control button becomes active.
2. When the prompt `<F1> Setup` is displayed, press F1.
3. From the Setup utility main menu, select **Boot Manager**.
4. Select **Add Boot Option**; then, select **Generic Boot Option** > **Embedded Hypervisor**. Press Enter, and then select Esc.
5. Select **Change Boot Order** > **Change the order**. Use the Up arrow and Down Arrow keys to select **Embedded Hypervisor** and use the plus (+) and minus (-) keys to move Embedded Hypervisor in the boot order. When **Embedded Hypervisor** is in the correct location in the boot order, press Enter. Select **Commit Changes** and press Enter.
6. Select **Save Settings** and then select **Exit Setup**.

### Results

If the embedded hypervisor flash device image becomes corrupt, you can download the image from http://www-03.ibm.com/systems/x/os/vmware/esxi/.

For additional information and instructions, see VMware vSphere 4.1 Documentation at http://www.vmware.com/support/pubs/vs_pages/vsp_pubs_esxi41_e_vc41.html or the *VMware vSphere Installation and Setup Guide* at http://pubs.vmware.com/vsphere-50/topic/com.vmware.ICbase/PDF/vsphere-esxi-vcenter-server-50-installation-setup-guide.pdf.

## Configuring the Ethernet controller

Use this information to configure the Ethernet controller.

The Ethernet controllers are integrated on the system board. They provide an interface for connecting to a 10 Mbps, 100 Mbps, or 1 Gbps network and provide full-duplex (FDX) capability, which enables simultaneous transmission and reception of data on the network. If the Ethernet ports in the server support auto-negotiation, the controllers detect the data-transfer rate (10BASE-T, 100BASE-TX, or 1000BASE-T) and duplex mode (full-duplex or half-duplex) of the network and automatically operate at that rate and mode.

You do not have to set any jumpers or configure the controllers. However, you must install a device driver to enable the operating system to address the controllers.

To find device drivers and information about configuring the Ethernet controllers, go to http://www.ibm.com/supportportal/.

## Enabling Features on Demand Ethernet software

You can activate the Features on Demand (FoD) software upgrade key for Fibre Channel over Ethernet (FCoE) and iSCSI storage protocols that is integrated in the integrated management module.

For more information and instructions for activating the Features on Demand Ethernet software key, see the *IBM Features on Demand User's Guide*. To download the document, go to /http://www.ibm.com/systems/x/fod/, log in, and click **Help**.

## Enabling Features on Demand RAID software

You can activate the Features on Demand (FoD) software upgrade key for RAID that is integrated in the integrated management module.

For more information and instructions for activating the Features on Demand RAID software key, see the *IBM Features on Demand User's Guide*. To download the document, go to /http://www.ibm.com/systems/x/fod/, log in, and click **Help**.

## Configuring RAID arrays

Through the Setup utility, you can access utilities to configure RAID arrays.

### About this task

The specific procedure for configuring arrays depends on the RAID controller that you are using. For details, see the documentation for your RAID controller. To access the utility for your RAID controller, complete the following steps:

### Procedure

1. Turn on the server.

   **Note:** Approximately 10 seconds after the server is connected to power, the power-control button becomes active.

2. When prompted, `<F1 Setup>` is displayed, press F1. If you have set an administrator password, you must type the administrator password to access the full Setup utility menu. If you do not type the administrator password, a limited Setup utility menu is available.
3. Select **System Settings** > **Storage**.
4. Press Enter to refresh the list of device drivers.
5. Select the device driver for your RAID controller and press Enter.
6. Follow the instructions in the documentation for your RAID controller.

## IBM Advanced Settings Utility program

The IBM Advanced Settings Utility (ASU) program is an alternative to the Setup utility for modifying UEFI settings.

Use the ASU program online or out of band to modify UEFI settings from the command line without the need to restart the system to access the Setup utility.

You can also use the ASU program to configure the optional remote presence features or other IMM2 settings. The remote presence features provide enhanced systems-management capabilities.

In addition, the ASU program provides IMM LAN over USB interface configuration through the command-line interface.

Use the command-line interface to issue setup commands. You can save any of the settings as a file and run the file as a script. The ASU program supports scripting environments through a batch-processing mode.

For more information and to download the ASU program, go to http://www.ibm.com/support/entry/portal/docdisplay?lndocid=TOOL-ASU.

## Updating IBM Systems Director

Use this information to update IBM Systems Director.

### About this task

If you plan to use IBM Systems Director to manage the server, you must check for the latest applicable IBM Systems Director updates and interim fixes.

**Note:** Changes are made periodically to the IBM website. The actual procedure might vary slightly from what is described in this document.

## Installing a newer version

### About this task

To locate and install a newer version of IBM Systems Director, complete the following steps:

### Procedure

1. Check for the latest version of IBM Systems Director:
   a. Go to http://www.ibm.com/systems/management/director/downloads.html.
   b. If a newer version of IBM Systems Director than what comes with the server is shown in the drop-down list, follow the instructions on the web page to download the latest version.
2. Install the IBM Systems Director program.

## Installing updates with your management server is connected to the Internet

### About this task

If your management server is connected to the Internet, to locate and install updates and interim fixes, complete the following steps:

### Procedure

1. Make sure that you have run the Discovery and Inventory collection tasks.
2. On the Welcome page of the IBM Systems Director web interface, click **View updates**.
3. Click **Check for updates**. The available updates are displayed in a table.
4. Select the updates that you want to install, and click Install to start the installation wizard.

## Installing updates with your management server is not connected to the Internet

### About this task

If your management server is not connected to the Internet, to locate and install updates and interim fixes, complete the following steps:

### Procedure

1. Make sure that you have run the Discovery and Inventory collection tasks.
2. On a system that is connected to the Internet, go to http://www.ibm.com/support/fixcentral/.
3. From the **Product family** list, select **IBM Systems Director**.
4. From the **Product** list, select **IBM Systems Director**.
5. From the **Installed version** list, select the latest version, and click**Continue**.
6. Download the available updates.
7. Copy the downloaded files to the management server.
8. On the management server, on the Welcome page of the IBM Systems Director web interface, click the **Manage** tab, and click **Update Manager**.
9. Click **Import updates** and specify the location of the downloaded files that you copied to the management server.
10. Return to the Welcome page of the Web interface, and click **View updates**.

11. Select the updates that you want to install, and click **Install** to start the installation wizard.

## Updating the Universal Unique Identifier (UUID)

Use this information to update the Universal Unique Identifier (UUID).

### About this task

The Universal Unique Identifier (UUID) must be updated when the system board is replaced. Use the Advanced Settings Utility to update the UUID in the UEFI-based server. The ASU is an online tool that supports several operating systems. Make sure that you download the version for your operating system. You can download the ASU from the IBM Web site. To download the ASU and update the UUID, complete the following steps.

**Note:** Changes are made periodically to the IBM website. The actual procedure might vary slightly from what is described in this document.

### Procedure

1. Download the Advanced Settings Utility (ASU):
   a. Go to http://www.ibm.com/supportportal/.
   b. Click the **Downloads** tab at the top of the panel.
   c. Under **ToolsCenter**, select **View ToolsCenter downloads**.
   d. Select **Advanced Settings Utility (ASU)**.
   e. Scroll down and click the link and download the ASU version for your operating system.
2. ASU sets the UUID in the Integrated Management Module (IMM). Select one of the following methods to access the Integrated Management Module (IMM) to set the UUID:
   - Online from the target system (LAN or keyboard console style (KCS) access)
   - Remote access to the target system (LAN based)
   - Bootable media containing ASU (LAN or KCS, depending upon the bootable media)
3. Copy and unpack the ASU package, which also includes other required files, to the server. Make sure that you unpack the ASU and the required files to the same directory. In addition to the application executable (asu or asu64), the following files are required:
   - For Windows based operating systems:
     – ibm_rndis_server_os.inf
     – device.cat
   - For Linux based operating systems:
     – cdc_interface.sh
4. After you install ASU, use the following command syntax to set the UUID: `asu set SYSTEM_PROD_DATA.SysInfoUUID <uuid_value> [access_method]`

   Where:

   *<uuid_value>*
   Up to 16-byte hexadecimal value assigned by you.

   *[access_method]*
   The access method that you selected to use from the following methods:

- Online authenticated LAN access, type the command:

  ```
  [host <imm_internal_ip>] [user <imm_user_id>][password <imm_password>]
  ```

  Where:

  *imm_internal_ip*
  The IMM internal LAN/USB IP address. The default value is 169.254.95.118.

  *imm_user_id*
  The IMM `account` (1 of 12 accounts). The default value is USERID.

  *imm_password*
  The IMM account password (1 of 12 accounts). The default value is PASSW0RD (with a zero 0 not an O).

  **Note:** If you do not specify any of these parameters, ASU will use the default values. When the default values are used and ASU is unable to access the IMM using the online authenticated LAN access method, ASU will automatically use the unauthenticated KCS access method.

  The following commands are examples of using the userid and password default values and not using the default values:

  Example that does not use the userid and password default values:
  ```
  asu set SYSTEM_PROD_DATA.SYsInfoUUID <uuid_value> --user <user_id>
  --password <password>
  ```
  Example that does use the userid and password default values:
  ```
  asu set SYSTEM_PROD_DATA.SysInfoUUID <uuid_value>
  ```
- Online KCS access (unauthenticated and user restricted):

  You do not need to specify a value for *access_method* when you use this access method.

  Example:
  ```
  asu set SYSTEM_PROD_DATA.SysInfoUUID <uuid_value>
  ```
  The KCS access method uses the IPMI/KCS interface. This method requires that the IPMI driver be installed. Some operating systems have the IPMI driver installed by default. ASU provides the corresponding mapping layer. See the *Advanced Settings Utility Users Guide* for more details. You can access the ASU Users Guide from the IBM website.

  **Note:** Changes are made periodically to the IBM website. The actual procedure might vary slightly from what is described in this document.

  a. Go to http://www.ibm.com/supportportal/.
  b. Click the **Downloads** tab at the top of the panel.
  c. Under **ToolsCenter**, select **View ToolsCenter downloads**.
  d. Select **Advanced Settings Utility (ASU)**.
  e. Scroll down and click the link and download the ASU version for your operating system. Scroll down and look under **Online Help** to download the *Advanced Settings Utility Users Guide*.
- Remote LAN access, type the command:

  **Note:** When using the remote LAN access method to access IMM using the LAN from a client, the *host* and the *imm_external_ip* address are required parameters.

  ```
  host <imm_external_ip> [user <imm_user_id>][password <imm_password>]
  ```

Where:

*imm_external_ip*
The external IMM LAN IP address. There is no default value. This parameter is required.

*imm_user_id*
The IMM `account` (1 of 12 accounts). The default value is USERID.

*imm_password*
The IMM account password (1 of 12 accounts). The default value is PASSW0RD (with a zero 0 not an O).

The following commands are examples of using the userid and password default values and not using the default values:

Example that does not use the userid and password default values:
```
asu set SYSTEM_PROD_DATA.SYsInfoUUID <uuid_value> --host <imm_ip>
--user <user_id> --password <password>
```

Example that does use the userid and password default values:
```
asu set SYSTEM_PROD_DATA.SysInfoUUID <uuid_value> --host <imm_ip>
```

- Bootable media:

  You can also build a bootable media using the applications available through the ToolsCenter website at http://www.ibm.com/support/entry/portal/docdisplay?lndocid=TOOL-CENTER. From the **IBM ToolsCenter** page, scroll down for the available tools.

5. Restart the server.

## Updating the DMI/SMBIOS data

Use this information to update the DMI/SMBIOS data.

### About this task

The Desktop Management Interface (DMI) must be updated when the system board is replaced. Use the Advanced Settings Utility to update the DMI in the UEFI-based server. The ASU is an online tool that supports several operating systems. Make sure that you download the version for your operating system. You can download the ASU from the IBM website. To download the ASU and update the DMI, complete the following steps.

**Note:** Changes are made periodically to the IBM website. The actual procedure might vary slightly from what is described in this document.

### Procedure

1. Download the Advanced Settings Utility (ASU):
   a. Go to http://www.ibm.com/supportportal/.
   b. Click the **Downloads** tab at the top of the panel.
   c. Under **ToolsCenter**, select **View ToolsCenter downloads**.
   d. Select **Advanced Settings Utility (ASU)**.
   e. Scroll down and click the link and download the ASU version for your operating system.
2. ASU sets the DMI in the Integrated Management Module (IMM). Select one of the following methods to access the Integrated Management Module (IMM) to set the DMI:

- Online from the target system (LAN or keyboard console style (KCS) access)
- Remote access to the target system (LAN based)
- Bootable media containing ASU (LAN or KCS, depending upon the bootable media)

3. Copy and unpack the ASU package, which also includes other required files, to the server. Make sure that you unpack the ASU and the required files to the same directory. In addition to the application executable (asu or asu64), the following files are required:
   - For Windows based operating systems:
     - ibm_rndis_server_os.inf
     - device.cat
   - For Linux based operating systems:
     - cdc_interface.sh
4. After you install ASU, Type the following commands to set the DMI:

   ```
   asu set SYSTEM_PROD_DATA.SysInfoProdName <m/t_model> [access_method]
   asu set SYSTEM_PROD_DATA.SysInfoSerialNum <s/n> [access_method]
   asu set SYSTEM_PROD_DATA.SysEncloseAssetTag <asset_tag> [access_method]
   ```

   Where:

   *<m/t_model>*
   The server machine type and model number. Type `mtm xxxxyyy`, where *xxxx* is the machine type and *yyy* is the server model number.

   *<s/n>* The serial number on the server. Type `sn zzzzzzz`, where *zzzzzzz* is the serial number.

   *<asset_method>*
   The server asset tag number. Type `asset aaaaaaaaaaaaaaaaaaaaaaaaaaaaaaaa`, where *aaaaaaaaaaaaaaaaaaaaaaaaaaaaaaaa* is the asset tag number.

   *[access_method]*
   The access method that you select to use from the following methods:

   - Online authenticated LAN access, type the command:

     ```
     [host <imm_internal_ip>] [user <imm_user_id>][password <imm_password>]
     ```

     Where:

     *imm_internal_ip*
     The IMM internal LAN/USB IP address. The default value is 169.254.95.118.

     *imm_user_id*
     The IMM `account` (1 of 12 accounts). The default value is USERID.

     *imm_password*
     The IMM account password (1 of 12 accounts). The default value is PASSW0RD (with a zero 0 not an O).

     **Note:** If you do not specify any of these parameters, ASU will use the default values. When the default values are used and ASU is unable to access the IMM using the online authenticated LAN access method, ASU will automatically use the unauthenticated KCS access method.

     The following commands are examples of using the userid and password default values and not using the default values:

Examples that do not use the userid and password default values:

```
asu set SYSTEM_PROD_DATA.SysInfoProdName <m/t_model>
--user <imm_user_id> --password <imm_password>
asu set SYSTEM_PROD_DATA.SysInfoSerialNum <s/n> --user <imm_user_id>
--password <imm_password>
asu set SYSTEM_PROD_DATA.SysEncloseAssetTag <asset_tag>
--user <imm_user_id> --password <imm_password>
```

Examples that do use the userid and password default values:

```
asu set SYSTEM_PROD_DATA.SysInfoProdName <m/t_model>
asu set SYSTEM_PROD_DATA.SysInfoSerialNum <s/n>
asu set SYSTEM_PROD_DATA.SysEncloseAssetTag <asset_tag>
```

- Online KCS access (unauthenticated and user restricted):

  You do not need to specify a value for *access_method* when you use this access method.

  The KCS access method uses the IPMI/KCS interface. This method requires that the IPMI driver be installed. Some operating systems have the IPMI driver installed by default. ASU provides the corresponding mapping layer. To download the *Advanced Settings Utility Users Guide*, complete the following steps:

  **Note:** Changes are made periodically to the IBM website. The actual procedure might vary slightly from what is described in this document.

  a. Go to http://www.ibm.com/supportportal/.
  b. Click the **Downloads** tab at the top of the panel.
  c. Under **ToolsCenter**, select **View ToolsCenter downloads**.
  d. Select **Advanced Settings Utility (ASU)**.
  e. Scroll down and click the link and download the ASU version for your operating system. Scroll down and look under **Online Help** to download the *Advanced Settings Utility Users Guide*.

- The following commands are examples of using the userid and password default values and not using the default values:

  Examples that do not use the userid and password default values:

  ```
  asu set SYSTEM_PROD_DATA.SysInfoProdName <m/t_model>
  asu set SYSTEM_PROD_DATA.SysInfoSerialNum <s/n>
  asu set SYSTEM_PROD_DATA.SysEncloseAssetTag <asset_tag>
  ```

- Remote LAN access, type the command:

  **Note:** When using the remote LAN access method to access IMM using the LAN from a client, the *host* and the *imm_external_ip* address are required parameters.

  ```
  host <imm_external_ip> [user <imm_user_id>][password <imm_password>]
  ```

  Where:

  *imm_external_ip*
  The external IMM LAN IP address. There is no default value. This parameter is required.

  *imm_user_id*
  The IMM `account` (1 of 12 accounts). The default value is USERID.

*imm_password*
The IMM account password (1 of 12 accounts). The default value is PASSW0RD (with a zero 0 not an O).

The following commands are examples of using the userid and password default values and not using the default values:

Examples that do not use the userid and password default values:

```
asu set SYSTEM_PROD_DATA.SysInfoProdName <m/t_model> --host <imm_ip>
--user <imm_user_id> --password <imm_password>
asu set SYSTEM_PROD_DATA.SysInfoSerialNum <s/n> --host <imm_ip>
--user <imm_user_id> --password <imm_password>
asu set SYSTEM_PROD_DATA.SysEncloseAssetTag <asset_tag> --host <imm_ip>
--user <imm_user_id> --password <imm_password>
```

Examples that do use the userid and password default values:

```
asu set SYSTEM_PROD_DATA.SysInfoProdName <m/t_model> --host <imm_ip>
asu set SYSTEM_PROD_DATA.SysInfoSerialNum <s/n> --host <imm_ip>
asu set SYSTEM_PROD_DATA.SysEncloseAssetTag <asset_tag> --host <imm_ip>
```

- Bootable media:

  You can also build a bootable media using the applications available through the ToolsCenter website at http://www.ibm.com/support/entry/portal/docdisplay?lndocid=TOOL-CENTER. From the **IBM ToolsCenter** page, scroll down for the available tools.

5. Restart the server.

# Chapter 3. Troubleshooting

This chapter describes the diagnostic tools and troubleshooting information that are available to help you solve problems that might occur in the server.

If you cannot diagnose and correct a problem by using the information in this chapter, see Appendix D, "Getting help and technical assistance," on page 973 for more information.

## Start here

You can solve many problems without outside assistance by following the troubleshooting procedures in this documentation and on the World Wide Web.

This document describes the diagnostic tests that you can perform, troubleshooting procedures, and explanations of error messages and error codes. The documentation that comes with your operating system and software also contains troubleshooting information.

### Diagnosing a problem

Before you contact IBM or an approved warranty service provider, follow these procedures in the order in which they are presented to diagnose a problem with your server.

#### Procedure

1. **Return the server to the condition it was in before the problem occurred.** If any hardware, software, or firmware was changed before the problem occurred, if possible, reverse those changes. This might include any of the following items:
   - Hardware components
   - Device drivers and firmware
   - System software
   - UEFI firmware
   - System input power or network connections
2. **View the light path diagnostics LEDs and event logs.** The server is designed for ease of diagnosis of hardware and software problems.
   - **Light path diagnostics LEDs:** See Light path diagnostics for information about using light path diagnostics LEDs.
   - **Event logs:** See "Event logs" on page 81 for information about notification events and diagnosis.
   - **Software or operating-system error codes:** See the documentation for the software or operating system for information about a specific error code. See the manufacturer's website for documentation.
3. **Run IBM Dynamic System Analysis (DSA) and collect system data.** Run Dynamic System Analysis (DSA) to collect information about the hardware, firmware, software, and operating system. Have this information available when you contact IBM or an approved warranty service provider. For instructions for running DSA, see the *Dynamic System Analysis Installation and User's Guide*.

© Copyright IBM Corp. 2014

To download the latest version of DSA code and the *Dynamic System Analysis Installation and User's Guide*, go to http://www.ibm.com/support/entry/portal/docdisplay?lndocid=SERV-DSA.

4. **Check for and apply code updates.** Fixes or workarounds for many problems might be available in updated UEFI firmware, device firmware, or device drivers. To display a list of available updates for the server, go to http://www.ibm.com/support/fixcentral/.

   **Attention:** Installing the wrong firmware or device-driver update might cause the server to malfunction. Before you install a firmware or device-driver update, read any readme and change history files that are provided with the downloaded update. These files contain important information about the update and the procedure for installing the update, including any special procedure for updating from an early firmware or device-driver version to the latest version.

   **Important:** Some cluster solutions require specific code levels or coordinated code updates. If the device is part of a cluster solution, verify that the latest level of code is supported for the cluster solution before you update the code.

   a. **Install UpdateXpress system updates.** You can install code updates that are packaged as an UpdateXpress System Pack or UpdateXpress CD image. An UpdateXpress System Pack contains an integration-tested bundle of online firmware and device-driver updates for your server. In addition, you can use IBM ToolsCenter Bootable Media Creator to create bootable media that is suitable for applying firmware updates and running preboot diagnostics. For more information about UpdateXpress System Packs, see http://www.ibm.com/support/entry/portal/docdisplay?lndocid=SERV-XPRESS and "Updating the firmware" on page 43. For more information about the Bootable Media Creator, see http://www.ibm.com/support/entry/portal/docdisplay?lndocid=TOOL-BOMC.

      Be sure to separately install any listed critical updates that have release dates that are later than the release date of the UpdateXpress System Pack or UpdateXpress image (see step 4b).

   b. **Install manual system updates.**

      1) **Determine the existing code levels.**

         In DSA, click **Firmware/VPD** to view system firmware levels, or click **Software** to view operating-system levels.

      2) **Download and install updates of code that is not at the latest level.**

         To display a list of available updates for the server, go to http://www.ibm.com/support/fixcentral/.

         When you click an update, an information page is displayed, including a list of the problems that the update fixes. Review this list for your specific problem; however, even if your problem is not listed, installing the update might solve the problem.

5. **Check for and correct an incorrect configuration.** If the server is incorrectly configured, a system function can fail to work when you enable it; if you make an incorrect change to the server configuration, a system function that has been enabled can stop working.

   a. **Make sure that all installed hardware and software are supported.** See http://www.ibm.com/systems/info/x86servers/serverproven/compat/us/ to verify that the server supports the installed operating system, optional devices, and software levels. If any hardware or software component is not supported, uninstall it to determine whether it is causing the problem. You

must remove nonsupported hardware before you contact IBM or an approved warranty service provider for support.

b. **Make sure that the server, operating system, and software are installed and configured correctly.** Many configuration problems are caused by loose power or signal cables or incorrectly seated adapters. You might be able to solve the problem by turning off the server, reconnecting cables, reseating adapters, and turning the server back on. For information about performing the checkout procedure, see "About the checkout procedure" on page 74. For information about configuring the server, see Chapter 2, "Configuration information and instructions," on page 43.

6. **See controller and management software documentation.** If the problem is associated with a specific function (for example, if a RAID hard disk drive is marked offline in the RAID array), see the documentation for the associated controller and management or controlling software to verify that the controller is correctly configured.

   Problem determination information is available for many devices such as RAID and network adapters.

   For problems with operating systems or IBM software or devices, go to http://www.ibm.com/supportportal.

7. **Check for troubleshooting procedures and RETAIN tips.** Troubleshooting procedures and RETAIN tips document known problems and suggested solutions. To search for troubleshooting procedures and RETAIN tips, go to http://www.ibm.com/supportportal.

8. **Use the troubleshooting tables.** See "Troubleshooting by symptom" on page 88 to find a solution to a problem that has identifiable symptoms.

   A single problem might cause multiple symptoms. Follow the troubleshooting procedure for the most obvious symptom. If that procedure does not diagnose the problem, use the procedure for another symptom, if possible.

   If the problem remains, contact IBM or an approved warranty service provider for assistance with additional problem determination and possible hardware replacement. To open an online service request, go to http://www.ibm.com/support/entry/portal/Open_service_request. Be prepared to provide information about any error codes and collected data.

## Undocumented problems

If you have completed the diagnostic procedure and the problem remains, the problem might not have been previously identified by IBM. After you have verified that all code is at the latest level, all hardware and software configurations are valid, and no light path diagnostics LEDs or log entries indicate a hardware component failure, contact IBM or an approved warranty service provider for assistance.

To open an online service request, go to http://www.ibm.com/support/entry/portal/Open_service_request. Be prepared to provide information about any error codes and collected data and the problem determination procedures that you have used.

## Service bulletins

IBM continually updates the support website with the latest tips and techniques that you can use to solve problem that you might have with the System x3650 M5 server.

To find service bulletins that are available for the IBM System x3650 M5 server, go to http://www.ibm.com/supportportal/ and search for `5462`, and `retain`.

## Checkout procedure

The checkout procedure is the sequence of tasks that you should follow to diagnose a problem in the server.

### About the checkout procedure

Before you perform the checkout procedure for diagnosing hardware problems, review the following information.

- Read the safety information that begins on page "Safety" on page vii.
- IBM Dynamic System Analysis (DSA) provides the primary methods of testing the major components of the server, such as the system board, Ethernet controller, keyboard, mouse (pointing device), serial ports, and hard disk drives. You can also use them to test some external devices. If you are not sure whether a problem is caused by the hardware or by the software, you can use the diagnostic programs to confirm that the hardware is working correctly.
- When you run DSA, a single problem might cause more than one error message. When this happens, correct the cause of the first error message. The other error messages usually will not occur the next time you run DSA.

  **Exception:** If multiple error codes or LCD system information display panel indicate a microprocessor error, the error might be in the microprocessor or in the microprocessor socket. See "Microprocessor problems" on page 96 for information about diagnosing microprocessor problems.
- Before you run DSA, you must determine whether the failing server is part of a shared hard disk drive cluster (two or more servers sharing external storage devices). If it is part of a cluster, you can run all diagnostic programs except the ones that test the storage unit (that is, a hard disk drive in the storage unit) or the storage adapter that is attached to the storage unit. The failing server might be part of a cluster if any of the following conditions is true:
  - You have identified the failing server as part of a cluster (two or more servers sharing external storage devices).
  - One or more external storage units are attached to the failing server and at least one of the attached storage units is also attached to another server or unidentifiable device.
  - One or more servers are located near the failing server.

  **Important:** If the server is part of a shared hard disk drive cluster, run one test at a time. Do not run any suite of tests, such as "quick" or "normal" tests, because this might enable the hard disk drive diagnostic tests.
- If the server is halted and a POST error code is displayed, see Appendix B, "UEFI/POST diagnostic codes," on page 817. If the server is halted and no error message is displayed, see "Troubleshooting by symptom" on page 88 and "Solving undetermined problems" on page 115.

- For information about power-supply problems, see “Solving power problems” on page 111, “Power problems” on page 100, and “Power-supply LEDs” on page 78.
- For intermittent problems, check the event log; see “Event logs” on page 81 and Appendix C, “DSA diagnostic test results,” on page 837.

## Performing the checkout procedure

Use this information to perform the checkout procedure.

### About this task

To perform the checkout procedure, complete the following steps:

### Procedure

1. Is the server part of a cluster?
   - **No:** Go to step 2.
   - **Yes:** Shut down all failing servers that are related to the cluster. Go to step 2.
2. Complete the following steps:
   a. Check the power supply LEDs (see “Power-supply LEDs” on page 78).
   b. Turn off the server and all external devices.
   c. Check all internal and external devices for compatibility at http://www.ibm.com/systems/info/x86servers/serverproven/compat/us/.
   d. Check all cables and power cords.
   e. Set all display controls to the middle positions.
   f. Turn on all external devices.
   g. Turn on the server. If the server does not start, see “Troubleshooting by symptom” on page 88.
   h. Check the system-error LED on the operator information panel. If it is lit, check the LCD system information display panel (see “LCD system information display panel” on page 22).
   i. Check for the following results:
      - Successful completion of POST (see “POST” on page 84 for more information)
      - Successful completion of startup, which is indicated by a readable display of the operating-system desktop
3. Is there a readable image on the monitor screen?
   - **No:** Find the failure symptom in “Troubleshooting by symptom” on page 88; if necessary, see “Solving undetermined problems” on page 115.
   - **Yes:** Run DSA (see “Running the DSA Preboot diagnostic programs” on page 86).
     – If DSA reports an error, follow the instructions in Appendix C, “DSA diagnostic test results,” on page 837.
     – If DSA does not report an error but you still suspect a problem, see “Solving undetermined problems” on page 115.

## Diagnostic tools

The section introduces available tools to help you diagnose and solve hardware-related problems.

- **LCD system information display panel**

  Use LCD system information display panel to diagnose system errors quickly.

- **Event logs**

  The event logs list the error codes and messages that are generated when an error is detected for the subsystems IMM2, POST, DSA, and the server baseboard management controller. See "Event logs" on page 81 for more information.

- **Integrated management module II**

  The integrated management module II (IMM2) combines service processor functions, video controller, and remote presence and blue-screen capture features in a single chip. The IMM provides advanced service-processor control, monitoring, and alerting function. If an environmental condition exceeds a threshold or if a system component fails, the IMM lights LEDs to help you diagnose the problem, records the error in the IMM event log, and alerts you to the problem. Optionally, the IMM also provides a virtual presence capability for remote server management capabilities. The IMM provides remote server management through the following industry-standard interfaces:

  – Intelligent Platform Management Protocol (IPMI) version 2.0
  – Simple Network Management Protocol (SNMP) version 3
  – Common Information Model (CIM)
  – Web browser

  For more information about the integrated management module II (IMM2), see "Using the integrated management module" on page 56, Appendix A, "Integrated management module II (IMM2) error messages," on page 305, and the *Integrated Management Module II User's Guide* at http://www.ibm.com/support/entry/portal/docdisplay?lndocid=MIGR-5086346.

- **IBM Dynamic System Analysis**

  Two editions of IBM Dynamic System Analysis (DSA) are available for diagnosing problems, DSA Portable and DSA Preboot:

  – DSA Portable

    DSA Portable collects and analyzes system information to aid in diagnosing server problems. DSA Portable runs on the server operating system and collects the following information about the server:

    - Drive health information
    - Event logs for ServeRAID controllers and service processors
    - IMM configuration information
    - IMM environmental information
    - Option card driver and firmware information
    - Installed hardware, including PCI and USB information
    - Installed applications and hot fixes
    - Kernel modules
    - Light path diagnostics status
    - Microprocessor, input/out hub, and UEFI error logs
    - Network interfaces and settings
    - RAID controller configuration

- Service processor (integrated management module) status and configuration
- System configuration
- Vital product data, firmware, and UEFI configuration

DSA Portable creates a DSA log, which is a chronologically ordered merge of the system-event log (as the IPMI event log), the integrated management module (IMM) event log (as the ASM event log), and the operating-system event logs. You can send the DSA log as a file to IBM Support (when requested by IBM Support) or view the information as a text file or HTML file.

**Note:** Use the latest available version of DSA to make sure you are using the most recent configuration data. For documentation and download information for DSA, see http://www.ibm.com/systems/management/.

For additional information, see "IBM Dynamic System Analysis" on page 84 and Appendix C, "DSA diagnostic test results," on page 837.

– DSA Preboot

DSA Preboot diagnostic program is stored in the integrated USB memory on the server. DSA Preboot collects and analyzes system information to aid in diagnosing server problems, as well as offering a rich set of diagnostic tests of the major components of the server. DSA Preboot collects the following information about the server:

- Drive health information
- IMM2 configuration information
- IMM2 environmental information
- Event logs for ServeRAID controllers and service processors
- Installed hardware, including PCI and USB information
- LCD system information display panel status
- Microprocessor, input/output hub, and UEFI error logs
- Network interfaces and settings
- Option card driver and firmware information
- RAID controller configuration
- Service processor (integrated management module) status and configuration
- System configuration
- Vital product data, firmware, and UEFI configuration

DSA Preboot also provides diagnostics for the following system components (when they are installed):

1. Emulex network adapter
2. IMM I2C bus
3. LCD system information display panel
4. Memory modules
5. Microprocessors
6. Optical devices (CD or DVD)
7. SAS or SATA drives
8. LSI Controller
9. Broadcom network adapter
10. FusionIO storage

11. Intel GPU
12. Nvidia GPU

See “Running the DSA Preboot diagnostic programs” on page 86 for more information on running the DSA Preboot program on the server.

- **Troubleshooting by symptom**

  These tables list problem symptoms and actions to correct the problems. See “Troubleshooting by symptom” on page 88 for more information.

## Power-supply LEDs

The following minimum configuration is required for the server to start.
- One microprocessor in microprocessor socket 1
- One 4 GB DIMM on the system board
- One power supply
- Power cord
- Four cooling fans (fan 1, 2, 3, and 5)

### AC power-supply LEDs

The following minimum configuration is required for the DC LED on the power supply to be lit:
- Power supply
- Power cord

**Note:** You must turn on the server for the DC LED on the power supply to be lit.

The following illustration shows the locations of the power-supply LEDs on the ac power supply.

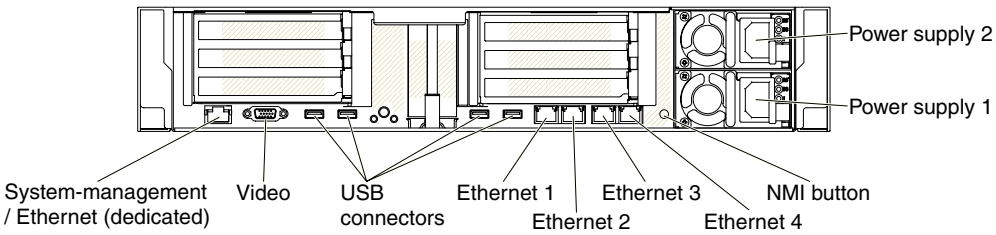


*Figure 43. AC power-supply LEDs*

The following table describes the problems that are indicated by various combinations of the power-supply LEDs on an ac power supply and suggested actions to correct the detected problems.

| AC power-supply LEDs | | | Description | Action | Notes |
|---|---|---|---|---|---|
| **AC** | **DC** | **Error (!)** | | | |
| On | On/ Blinking | Off | Normal operation. | | |

| AC power-supply LEDs | | | Description | Action | Notes |
|---|---|---|---|---|---|
| **AC** | **DC** | **Error (!)** | | | |
| Off | Off | Off | No ac power to the server or a problem with the ac power source. | 1. Check the ac power to the server.<br>2. Make sure that the power cord is connected to a functioning power source.<br>3. Restart the server. If the error remains, check the power-supply LEDs.<br>4. If the problem remains, replace the power-supply. | This is a normal condition when no ac power is present. |
| Off | Off | On | The power supply has failed. | Replace the power supply. | |
| Off | On/ Blinking | Off | The power supply has failed. | Replace the power supply. | |
| Off | On/ Blinking | On | The power supply has failed. | Replace the power supply. | |
| On | Off | Off | Power-supply not fully seated, faulty system board, or the power supply has failed. | 1. Reseat the power supply.<br>2. Use the IBM Power Configurator utility to ensure current system power consumption is under limitation. For more information and to download the utility, go to http://www.ibm.com/ systems/bladecenter/ resources/powerconfig.html.<br>3. Check the error LEDs on the system board and the IMM2 error messages. Follow steps in “Power problems” on page 100 and “Solving power problems” on page 111 until the problem is solved. | Typically indicates a power-supply is not fully seated. |
| On | Off | On | The power supply has failed. | Replace the power supply. | |
| On | On/ Blinking | On | The power supply has failed. | Replace the power supply. | |
| **Note:** When the DC LED is blinking at a 1Hz rate, the PSU is at STANDBY mode, i.e. no DC power output from this PSU. | | | | | |

## System pulse LEDs

The following LEDs are on the system board and monitor the system power-on and power-off sequencing and boot progress (see "System-board LEDs" on page 33 for the location of these LEDs).

*Table 5. System pulse LEDs*

| LED | Description | Action |
|---|---|---|
| IMM2 heartbeat | IMM2 heartbeat boot process. | The following steps describe the different stages of the IMM2 heartbeat sequencing process.<br>1. When this LED is blinking fast (approximately 4Hz), this indicates, that the IMM2 code is in the loading process.<br>2. When this LED goes off momentarily, this indicates that the IMM2 code has loaded completely.<br>3. When this LED goes off momentarily and then starts blinking slowing (approximately 1Hz), this indicates that IMM2 is fully operational. You can now press the power-control button to power-on the server.<br>4. If this LED does not blink within 30 seconds of connecting a power source to the server, (trained technician only) replace the system board. |

## PCI riser-card LEDs

The following illustration shows the location of the PCI riser-card LEDs.

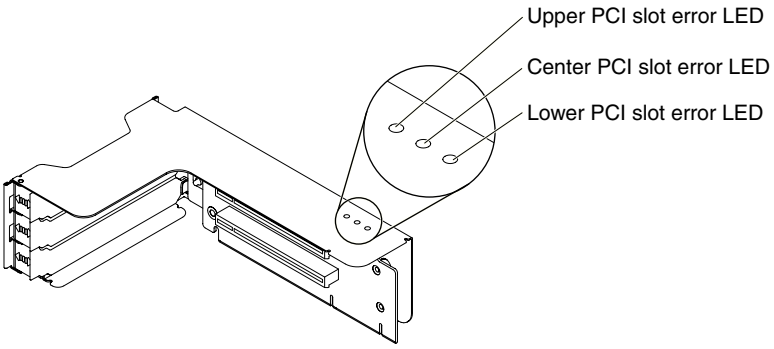


*Figure 44. PCI riser-card LEDs*

## Event logs

Error codes and messages displayed in POST event log, system-event log, integrated management module (IMM2) event log, and DSA event log.

- **POST event log:** This log contains the most recent error codes and messages that were generated during POST. You can view the contents of the POST event log from the Setup utility (see "Starting the Setup utility" on page 48). For more information about POST error codes, see Appendix B, "UEFI/POST diagnostic codes," on page 817.
- **System-event log:** This log contains POST and system management interrupt (SMI) events and all events that are generated by the baseboard management controller that is embedded in the integrated management module (IMM). You can view the contents of the system-event log through the Setup utility and through the Dynamic System Analysis (DSA) program (as IPMI event log).

  The system-event log is limited in size. When it is full, new entries will not overwrite existing entries; therefore, you must periodically clear the system-event log through the Setup utility. When you are troubleshooting an error, you might have to save and then clear the system-event log to make the most recent events available for analysis. For more information about the system-event log, see Appendix A, "Integrated management module II (IMM2) error messages," on page 305.

  Messages are listed on the left side of the screen, and details about the selected message are displayed on the right side of the screen. To move from one entry to the next, use the Up Arrow (↑) and Down Arrow (↓) keys.

  Some IMM sensors cause assertion events to be logged when their setpoints are reached. When a setpoint condition no longer exists, a corresponding deassertion event is logged. However, not all events are assertion-type events.
- **Integrated management module II (IMM2) event log:** This log contains a filtered subset of all IMM, POST, and system management interrupt (SMI) events. You can view the IMM event log through the IMM web interface. For more information, see "Logging on to the web interface" on page 59. You can also view the IMM event log through the Dynamic System Analysis (DSA) program (as the ASM event log). For more information about IMM error messages, see Appendix A, "Integrated management module II (IMM2) error messages," on page 305.
- **DSA event log:** This log is generated by the Dynamic System Analysis (DSA) program, and it is a chronologically ordered merge of the system-event log (as the IPMI event log), the IMM chassis-event log (as the ASM event log), and the operating-system event logs. You can view the DSA event log through the DSA program (see "Viewing event logs without restarting the server" on page 82). For more information about DSA and DSA messages, see "IBM Dynamic System Analysis" on page 84 and Appendix C, "DSA diagnostic test results," on page 837.

## Viewing event logs through the Setup utility

To view the POST event log or system-event log, complete the following steps:

### Procedure

1. Turn on the server.
2. When the prompt `<F1> Setup` is displayed, press `F1`. If you have set both a power-on password and an administrator password, you must type the administrator password to view the event logs.
3. Select **System Event Logs** and use one of the following procedures:
   - To view the POST event log, select **POST Event Viewers**.
   - To view the system-event log, select **System Event Log**.

## Viewing event logs without restarting the server

If the server is not hung and the IMM is connected to a network, methods are available for you to view one or more event logs without having to restart the server.

If you have installed Dynamic System Analysis (DSA) Portable, you can use it to view the system-event log (as the IPMI event log), or the IMM event log (as the ASM event log), the operating-system event logs, or the merged DSA log. You can also use DSA Preboot to view these logs, although you must restart the server to use DSA Preboot. To install DSA Portable or check for and download a later version of DSA Preboot CD image, go to http://www.ibm.com/support/entry/portal/docdisplay?lndocid=SERV-DSA.

If IPMItool is installed in the server, you can use it to view the system-event log. Most recent versions of the Linux operating system come with a current version of IPMItool. For an overview of IPMI, go to http://www.ibm.com/developerworks/linux/blueprints/ and click **Using Intelligent Platform Management Interface (IPMI) on IBM Linux platforms**.

You can view the IMM event log through the **Event Log** link in the integrated management module II (IMM2) web interface. For more information, see "Logging on to the web interface" on page 59.

The following table describes the methods that you can use to view the event logs, depending on the condition of the server. The first three conditions generally do not require that you restart the server.

*Table 6. Methods for viewing event logs*

| Condition | Action |
|---|---|
| The server is not hung and is connected to a network (using an operating system controlled network ports). | Use any of the following methods:<br>• Run DSA Portable to view the diagnostic event log (requires IPMI driver) or create an output file that you can send to IBM service and support (using ftp or local copy).<br>• Use IPMItool to view the system-event log (requires IPMI driver).<br>• Use the web browser interface to the IMM to view the system-event log locally (requires RNDIS USB LAN driver). |

*Table 6. Methods for viewing event logs (continued)*

| Condition | Action |
|---|---|
| The server is not hung and is not connected to a network (using an operating system controlled network ports). | • Run DSA Portable to view the diagnostic event log (requires IPMI driver) or create an output file that you can send to IBM service and support (using ftp or local copy).<br>• Use IPMItool to view the system-event log (requires IPMI driver).<br>• Use the web browser interface to the IMM to view the system-event log locally (requires RNDIS USB LAN driver). |
| The server is not hung and the integrated management module II (IMM2) is connected to a network. | In a web browser, type the IP address for the IMM2 and go to the **Event Log** page. For more information, see "Obtaining the IMM host name" on page 58 and "Logging on to the web interface" on page 59. |
| The server is hung, and no communication can be made with the IMM. | • If DSA Preboot is installed, restart the server and press `F2` to start DSA Preboot and view the event logs (see "Running the DSA Preboot diagnostic programs" on page 86 for more information).<br>• Alternatively, you can restart the server and press `F1` to start the Setup utility and view the POST event log or system-event log. For more information, see "Viewing event logs through the Setup utility" on page 82. |

## Clearing the event logs

Use this information to clear the event logs.

### About this task

To clear the event logs, complete the following steps.

**Note:** The POST error log is automatically cleared each time the server is restarted.

### Procedure

1. Turn on the server.
2. When the prompt `<F1> Setup` is displayed, press `F1`. If you have set both a power-on password and an administrator password, you must type the administrator password to view the event logs.
3. To clear the IMM system-event log, select **System Event Logs** > **Clear System Event Log**, then, press **Enter** twice.

## POST

When you turn on the server, it performs a series of tests to check the operation of the server components and some optional devices in the server. This series of tests is called the power-on self-test, or POST.

**Note:** This server does not use beep codes for server status.

If a power-on password is set, you must type the password and press **Enter** (when you are prompted), for POST to run.

If POST detects a problem, an error message is displayed. See Appendix B, "UEFI/POST diagnostic codes," on page 817 for more information.

If POST detects a problem, an error message is sent to the POST event log, see "Event logs" on page 81 for more information.

## IBM Dynamic System Analysis

IBM Dynamic System Analysis (DSA) collects and analyzes system information to aid in diagnosing server problems.

DSA collects the following information about the server:

- Drive health information
- Event logs for ServeRAID controllers and service processors
- Hardware inventory, including PCI and USB information
- Installed applications and hot fixes (available in DSA Portable only)
- Kernel modules (available in DSA Portable only)
- Light path diagnostics status
- Network interfaces and settings
- Performance data and details about processes that are running
- RAID controller configuration
- Service processor (integrated management module) status and configuration
- System configuration
- Vital product data and firmware information

For system-specific information about the action that you should take as a result of a message that DSA generates, see Appendix C, "DSA diagnostic test results," on page 837.

If you cannot find a problem by using DSA, see "Solving undetermined problems" on page 115 for information about testing the server.

**Note:** DSA Preboot might appear to be unresponsive when you start the program. This is normal operation while the program loads.

Make sure that the server has the latest version of the DSA code. To obtain DSA code and the *Dynamic System Analysis Installation and User's Guide*, go to http://www.ibm.com/support/entry/portal/docdisplay?lndocid=SERV-DSA.

## DSA editions

Two editions of Dynamic System Analysis are available.

- **DSA Portable**

  DSA Portable Edition runs within the operating system; you do not have to restart the server to run it. It is packaged as a self-extracting file that you download from the web. When you run the file, it self-extracts to a temporary folder and performs comprehensive collection of hardware and operating-system information. After it runs, it automatically deletes the temporary files and folder and leaves the results of the data collection and diagnostics on the server.

  If you are unable to restart the server, use DSA Portable.

- **DSA Preboot**

  DSA Preboot runs outside of the operating system; you must restart the server to run it. It is provided in the flash memory on the server, or you can create a bootable media such as a CD, DVD, ISO, USB, or PXE using the IBM ToolsCenter Bootable Media Creator (BoMC). For more details, see the BoMC *User Guide* at http://www.ibm.com/support/entry/portal/docdisplay?lndocid=TOOL-BOMC. In addition to the capabilities of the other editions of DSA, DSA Preboot includes diagnostic routines that would be disruptive to run within the operating-system environment (such as resetting devices and causing loss of network connectivity). It has a graphical user interface that you can use to specify which diagnostics to run and to view the diagnostic and data collection results.

  DSA Preboot provides diagnostics for the following system components, if they are installed:

  – Emulex network adapter
  – Optical devices (CD or DVD)
  – Memory
  – Microprocessor
  – Checkpoint panel
  – I2C bus
  – SAS and SATA drives

  If you are able to restart the server or if you need comprehensive diagnostics, use DSA Preboot.

For more information and to download the utilities, go to http://www.ibm.com/support/entry/portal/docdisplay?lndocid=SERV-DSA.

## Running the DSA Preboot diagnostic programs

Use this information to run the DSA Preboot diagnostic programs.

### About this task

**Note:** The DSA memory test might take up to 30 minutes to run. If the problem is not a memory problem, skip the memory test.

To run the DSA Preboot diagnostic programs, complete the following steps:

### Procedure

1. If the server is running, turn off the server and all attached devices.
2. Turn on all attached devices; then, turn on the server.
3. When the prompt `<F2> Diagnostics` is displayed, press `F2`.

   **Note:** The DSA Preboot diagnostic program might appear to be unresponsive for an unusual length of time when you start the program. This is normal operation while the program loads. The loading process may take up to 10 minutes.
4. Optionally, select **Quit to DSA** to exit from the stand-alone memory diagnostic program.

   **Note:** After you exit from the stand-alone memory diagnostic environment, you must restart the server to access the stand-alone memory diagnostic environment again.
5. Type **gui** to display the graphical user interface, or type **cmd** to display the DSA interactive menu.
6. Follow the instructions on the screen to select the diagnostic test to run.

### Results

If the diagnostic programs do not detect any hardware errors but the problem remains during normal server operation, a software error might be the cause. If you suspect a software problem, see the information that comes with your software.

A single problem might cause more than one error message. When this happens, correct the cause of the first error message. The other error messages usually will not occur the next time you run the diagnostic programs.

If the server stops during testing and you cannot continue, restart the server and try running the DSA Preboot diagnostic programs again. If the problem remains, replace the component that was being tested when the server stopped.

### Diagnostic text messages

Diagnostic text messages are displayed while the tests are running.

A diagnostic text message contains one of the following results:

**Passed:** The test was completed without any errors.

**Failed:** The test detected an error.

**Aborted:** The test could not proceed because of the server configuration

Additional information concerning test failures is available in the extended diagnostic results for each test.

### Viewing the test log results and transferring the DSA collection

To view the test log for the results when the tests are completed, click the **Success** link in the Status column, if you are running the DSA graphical user interface, or type `:x` to exit the Execute Tests menu, if you are running the DSA interactive menu, or select **Diagnostic Event Log** in the graphical user interface. To transfer DSA Preboot collections to an external USB device, type the `copy` command in the DSA interactive menu.

#### Procedure

- If you are running the DSA graphical user interface (GUI), click the **Success** link in the Status column.
- If you are running the DSA interactive menu (CLI), type `:x` to exit the Execute Tests menu; then, select **completed tests** to view the results.

#### Results

You can also send the DSA error log to IBM support to aid in diagnosing the server problems.

## Automated service request (call home)

IBM provides tools that can automatically collect and send data or call IBM Support when an error is detected. These tools can help IBM Support speed up the process of diagnosing problems. The following sections provide information about the call home tools.

## IBM Electronic Service Agent

IBM Electronic Service Agent monitors, tracks, and captures system hardware errors and hardware and software inventory information, and reports serviceable problems directly to IBM Support.

You can also choose to collect data manually. It uses minimal system resources, and can be downloaded from the IBM website. For more information and to download IBM Electronic Service Agent, go to http://www-01.ibm.com/support/esa/.

# Error messages

This section provides the list of error codes and messages for UEFI/POST, IMM2, and DSA that are generated when a problem is detected.

See Appendix B, "UEFI/POST diagnostic codes," on page 817, Appendix A, "Integrated management module II (IMM2) error messages," on page 305, and Appendix C, "DSA diagnostic test results," on page 837 for more information.

# Troubleshooting by symptom

Use the troubleshooting tables to find solutions to problems that have identifiable symptoms.

### About this task

If you cannot find a solution to the problem in these tables, see Appendix C, "DSA diagnostic test results," on page 837 for information about testing the server and "Running the DSA Preboot diagnostic programs" on page 86 for additional information about running DSA Preboot program. For additional information to help you solve problems, see "Start here" on page 71.

If you have just added new software or a new optional device and the server is not working, complete the following steps before you use the troubleshooting tables:

### Procedure

1. Check the system-error LED on the operator information panel; if it is lit, check the LCD system information display panel.
2. Remove the software or device that you just added.
3. Run IBM Dynamic System Analysis (DSA) to determine whether the server is running correctly (for information about using DSA, see Appendix C, "DSA diagnostic test results," on page 837).
4. Reinstall the new software or new device.

### Results

## CD/DVD drive problems

Use the troubleshooting tables to find solutions to problems that have identifiable symptoms.

- **Follow the suggested actions in the order in which they are listed in the Action column until the problem is solved.**
- **If an action step is preceded by "(Trained technician only)," that step must be performed only by a Trained technician.**
- **Go to the IBM support website at http://www.ibm.com/supportportal/ to check for technical information, hints, tips, and new device drivers or to submit a request for information.**

| Symptom | Action |
|---|---|
| The optional DVD drive is not recognized. | 1. Make sure that:<br>• The SATA connector to which the DVD drive is attached is enabled in the Setup utility.<br>• All cables and jumpers are installed correctly.<br>• The correct device driver is installed for the DVD drive.<br>2. Run the DVD drive diagnostic programs.<br>3. Reseat the following components:<br>a. DVD drive<br>b. DVD drive cable<br>4. Replace the components listed in step 3 one at a time, in the order shown, restarting the server each time.<br>5. (Trained technician only) Replace the system board. |
| A CD or DVD is not working correctly. | 1. Clean the CD or DVD.<br>2. Replace the CD or DVD with new CD or DVD media.<br>3. Run the DVD drive diagnostic programs.<br>4. Reseat the DVD drive.<br>5. Replace the DVD drive. |
| The DVD drive tray is not working. | 1. Make sure that the server is turned on.<br>2. Insert the end of a straightened paper clip into the manual tray-release opening.<br>3. Reseat the DVD drive.<br>4. Replace the DVD drive. |

## General problems

Use the troubleshooting tables to find solutions to problems that have identifiable symptoms.

- **Follow the suggested actions in the order in which they are listed in the Action column until the problem is solved.**
- **If an action step is preceded by "(Trained technician only)," that step must be performed only by a trained technician.**
- **Go to the IBM support website at http://www.ibm.com/supportportal/ to check for technical information, hints, tips, and new device drivers or to submit a request for information.**

| Symptom | Action |
|---|---|
| A cover latch is broken, an LED is not working, or a similar problem has occurred. | If the part is a CRU, replace it. If the part is a microprocessor or the system board, the part must be replaced by a trained technician. |
| The server is hung while the screen is on. Cannot start the Setup utility by pressing F1. | 1. See "Nx-boot failure" on page 120 for more information.<br>2. See "Recovering the server firmware (UEFI update failure)" on page 117 for more information. |

## Hard disk drive problems

Use the troubleshooting tables to find solutions to problems that have identifiable symptoms.

- **Follow the suggested actions in the order in which they are listed in the Action column until the problem is solved.**
- **If an action step is preceded by "(Trained technician only)," that step must be performed only by a trained technician.**
- **Go to the IBM support website at http://www.ibm.com/supportportal/ to check for technical information, hints, tips, and new device drivers or to submit a request for information.**

| Symptom | Action |
|---|---|
| A hard disk drive has failed, and the associated yellow hard disk drive status LED is lit. | Replace the failed hard disk drive (see "Removing a hot-swap hard disk drive" on page 154 and "Replacing a hot-swap hard disk drive" on page 155). |

| | |
|---|---|
| • **Follow the suggested actions in the order in which they are listed in the Action column until the problem is solved.**<br>• **If an action step is preceded by "(Trained technician only)," that step must be performed only by a trained technician.**<br>• **Go to the IBM support website at http://www.ibm.com/supportportal/ to check for technical information, hints, tips, and new device drivers or to submit a request for information.** | |
| **Symptom** | **Action** |
| A newly installed hard disk drive is not recognized. | 1. Make sure that the installed hard disk drive or ServeRAID adapter is supported. For a list of supported optional devices, see http://www.ibm.com/systems/info/x86servers/serverproven/compat/us/.<br>2. Observe the associated yellow hard disk drive status LED. If the LED is lit, it indicates a drive fault.<br>3. If the LED is lit, remove the drive from the bay, wait 45 seconds, and reinsert the drive, making sure that the drive assembly connects to the hard disk drive backplane.<br>4. Observe the associated green hard disk drive activity LED and the yellow status LED:<br>• If the green activity LED is flashing and the yellow status LED is not lit, the drive is recognized by the controller and is working correctly. Run the DSA diagnostics program to determine whether the drive is detected.<br>• If the green activity LED is flashing and the yellow status LED is flashing slowly, the drive is recognized by the controller and is rebuilding.<br>• If neither LED is lit or flashing, check the hard disk drive backplane (go to step 5).<br>• If the green activity LED is flashing and the yellow status LED is lit, replace the drive. If the activity of the LEDs remains the same, go to step 5. If the activity of the LEDs changes, return to step 2.<br>5. Make sure that the hard disk drive backplane is correctly seated. When it is correctly seated, the drive assemblies correctly connect to the backplane without bowing or causing movement of the backplane.<br>6. Reseat the backplane power cable and repeat steps 2 through 4.<br>7. Reseat the backplane signal cable and repeat steps 2 through 4.<br>8. Suspect the backplane signal cable or the backplane:<br>• If the server has hot-swap bays:<br>a. Replace the affected backplane signal cable.<br>b. Replace the affected backplane.<br>9. See "Problem determination tips" on page 116. |
| Multiple hard disk drives fail. | Make sure that the hard disk drive, SAS/SATA adapter, and server device drivers and firmware are at the latest level.<br>**Important:** Some cluster solutions require specific code levels or coordinated code updates. If the device is part of a cluster solution, verify that the latest level of code is supported for the cluster solution before you update the code. |
| Multiple hard disk drives are offline. | 1. Review the storage subsystem logs for indications of problems within the storage subsystem, such as backplane or cable problems.<br>2. See "Problem determination tips" on page 116. |
| A replacement hard disk drive does not rebuild. | 1. Make sure that the hard disk drive is recognized by the adapter (the green hard disk drive activity LED is flashing).<br>2. Review the SAS/SATA adapter documentation to determine the correct configuration parameters and settings. |

| • **Follow the suggested actions in the order in which they are listed in the Action column until the problem is solved.**<br>• **If an action step is preceded by "(Trained technician only)," that step must be performed only by a trained technician.**<br>• **Go to the IBM support website at http://www.ibm.com/supportportal/ to check for technical information, hints, tips, and new device drivers or to submit a request for information.** | |
|---|---|
| **Symptom** | **Action** |
| A green hard disk drive activity LED does not accurately represent the actual state of the associated drive. | If the green hard disk drive activity LED does not flash when the drive is in use, run the DSA Preboot diagnostic programs to collect error logs (see "Running the DSA Preboot diagnostic programs" on page 86).<br>• If there is a hard disk drive error log, replace the affected hard disk drive.<br>• If there is no disk drive error log error log, replace the affected backplane. |
| An yellow hard disk drive status LED does not accurately represent the actual state of the associated drive. | 1. If the yellow hard disk drive LED and the RAID adapter software do not indicate the same status for the drive, complete the following steps:<br>a. Turn off the server.<br>b. Reseat the SAS/SATA adapter.<br>c. Reseat the backplane signal/power cable.<br>d. Reseat the hard disk drive.<br>e. Turn on the server and observe the activity of the hard disk drive LEDs.<br>2. See "Problem determination tips" on page 116. |

## Hypervisor problems

Use the troubleshooting tables to find solutions to problems that have identifiable symptoms.

| • **Follow the suggested actions in the order in which they are listed in the Action column until the problem is solved.**<br>• **If an action step is preceded by "(Trained technician only)," that step must be performed only by a trained technician.**<br>• **Go to the IBM support website at http://www.ibm.com/supportportal/ to check for technical information, hints, tips, and new device drivers or to submit a request for information.** | |
|---|---|
| **Symptom** | **Action** |
| If an optional embedded hypervisor flash device is not listed in the expected boot order, does not appear in the list of boot devices, or a similar problem has occurred. | 1. Make sure that the optional embedded hypervisor flash device is selected on the boot manager `<F12> Select Boot Device` at startup.<br>2. Make sure that the embedded hypervisor flash device is seated in the connector correctly (see "Removing a USB embedded hypervisor flash device" on page 239 and "Replacing a USB embedded hypervisor flash device" on page 240).<br>3. See the documentation that comes with the optional embedded hypervisor flash device for setup and configuration information.<br>4. Make sure that other software works on the server. |

## Intermittent problems

Use the troubleshooting tables to find solutions to problems that have identifiable symptoms.

- **Follow the suggested actions in the order in which they are listed in the Action column until the problem is solved.**
- **If an action step is preceded by "(Trained technician only)," that step must be performed only by a trained technician.**
- **Go to the IBM support website at http://www.ibm.com/supportportal/ to check for technical information, hints, tips, and new device drivers or to submit a request for information.**

| Symptom | Action |
|---|---|
| A problem occurs only occasionally and is difficult to diagnose. | 1. Make sure that:<br>• All cables and cords are connected securely to the rear of the server and attached devices.<br>• When the server is turned on, air is flowing from the fan grille. If there is no airflow, the fan is not working. This can cause the server to overheat and shut down.<br>2. Check the system-error log or IMM event logs (see "Event logs" on page 81). |
| The server resets (restarts) occasionally. | 1. If the reset occurs during POST and the POST watchdog timer is enabled (click **System Settings** > **Recovery** > **System Recovery** > **POST Watchdog Timer** in the Setup utility to see the POST watchdog setting), make sure that sufficient time is allowed in the watchdog timeout value (**POST Watchdog Timer**). If the server continues to reset during POST, see Appendix B, "UEFI/POST diagnostic codes," on page 817 and Appendix C, "DSA diagnostic test results," on page 837.<br>2. If neither condition applies, check the system-error log or IMM system-event log (see "Event logs" on page 81). |

## Keyboard, mouse, or USB-device problems

Use the troubleshooting tables to find solutions to problems that have identifiable symptoms.

- **Follow the suggested actions in the order in which they are listed in the Action column until the problem is solved.**
- **If an action step is preceded by "(Trained technician only)," that step must be performed only by a trained technician.**
- **Go to the IBM support website at http://www.ibm.com/supportportal/ to check for technical information, hints, tips, and new device drivers or to submit a request for information.**

| Symptom | Action |
|---|---|
| All or some keys on the keyboard do not work. | 1. Make sure that:<br>• The keyboard cable is securely connected.<br>• The server and the monitor are turned on.<br>2. If you are using a USB keyboard, run the Setup utility and enable keyboardless operation.<br>3. If you are using a USB keyboard and it is connected to a USB hub, disconnect the keyboard from the hub and connect it directly to the server.<br>4. Replace the keyboard. |

| • **Follow the suggested actions in the order in which they are listed in the Action column until the problem is solved.**<br>• **If an action step is preceded by "(Trained technician only)," that step must be performed only by a trained technician.**<br>• **Go to the IBM support website at http://www.ibm.com/supportportal/ to check for technical information, hints, tips, and new device drivers or to submit a request for information.** | |
|---|---|
| **Symptom** | **Action** |
| The mouse or USB-device does not work. | 1. Make sure that:<br>• The mouse or USB device cable is securely connected to the server.<br>• The mouse or USB device drivers are installed correctly.<br>• The server and the monitor are turned on.<br>• The mouse option is enabled in the Setup utility.<br>2. If you are using a USB mouse or USB device and it is connected to a USB hub, disconnect the mouse or USB device from the hub and connect it directly to the server.<br>3. Replace the mouse or USB-device. |

## Memory problems

Use the troubleshooting tables to find solutions to problems that have identifiable symptoms.

| | |
|---|---|
| • **Follow the suggested actions in the order in which they are listed in the Action column until the problem is solved.**<br>• **If an action step is preceded by "(Trained technician only)," that step must be performed only by a trained technician.**<br>• **Go to the IBM support website at http://www.ibm.com/supportportal/ to check for technical information, hints, tips, and new device drivers or to submit a request for information.** | |
| **Symptom** | **Action** |
| The amount of system memory that is displayed is less than the amount of installed physical memory. | **Note:** Each time you install or remove a DIMM, you must disconnect the server from the power source; then, wait 10 seconds before restarting the server.<br>1. Make sure that:<br>• No error LEDs are lit on the operator information panel.<br>• No DIMM error LEDs are lit on the system board.<br>• Memory mirrored channel does not account for the discrepancy.<br>• The memory modules are seated correctly.<br>• You have installed the correct type of memory.<br>• If you changed the memory, you updated the memory configuration in the Setup utility.<br>• All banks of memory are enabled. The server might have automatically disabled a memory bank when it detected a problem, or a memory bank might have been manually disabled.<br>• There is no memory mismatch when the server is at the minimum memory configuration.<br>2. Reseat the DIMMs, and then restart the server.<br>3. Check the POST error log:<br>• If a DIMM was disabled by a systems-management interrupt (SMI), replace the DIMM.<br>• If a DIMM was disabled by the user or by POST, reseat the DIMM; then, run the Setup utility and enable the DIMM.<br>4. Check that all DIMMs are initialized in the Setup utility; then, run memory diagnostics (see "Running the DSA Preboot diagnostic programs" on page 86).<br>5. Reverse the DIMMs between the channels (of the same microprocessor), and then restart the server. If the problem is related to a DIMM, replace the failing DIMM.<br>6. Re-enable all DIMMs using the Setup utility, and then restart the server.<br>7. (Trained technician only) Install the failing DIMM into a DIMM connector for microprocessor 2 (if installed) to verify that the problem is not the microprocessor or the DIMM connector.<br>8. (Trained technician only) Replace the system board. |

| | |
|---|---|
| • **Follow the suggested actions in the order in which they are listed in the Action column until the problem is solved.**<br>• **If an action step is preceded by "(Trained technician only)," that step must be performed only by a trained technician.**<br>• **Go to the IBM support website at http://www.ibm.com/supportportal/ to check for technical information, hints, tips, and new device drivers or to submit a request for information.** | |
| **Symptom** | **Action** |
| Multiple DIMMs in a channel are identified as failing. | **Note:** Each time you install or remove a DIMM, you must disconnect the server from the power source; then, wait 10 seconds before restarting the server.<br>1. Reseat the DIMMs; then, restart the server.<br>2. Remove the highest-numbered DIMM of those that are identified and replace it with an identical known good DIMM; then, restart the server. Repeat as necessary. If the failures continue after all identified DIMMs are replaced, go to step 4.<br>3. Return the removed DIMMs, one at a time, to their original connectors, restarting the server after each DIMM, until a DIMM fails. Replace each failing DIMM with an identical known good DIMM, restarting the server after each DIMM replacement. Repeat step 3 until you have tested all removed DIMMs.<br>4. Replace the highest-numbered DIMM of those identified; then, restart the server. Repeat as necessary.<br>5. Reverse the DIMMs between the channels (of the same microprocessor), and then restart the server. If the problem is related to a DIMM, replace the failing DIMM.<br>6. (Trained technician only) Install the failing DIMM into a DIMM connector for microprocessor 2 (if installed) to verify that the problem is not the microprocessor or the DIMM connector.<br>7. (Trained technician only) Replace the system board. |

## Microprocessor problems

Use the troubleshooting tables to find solutions to problems that have identifiable symptoms.

| | |
|---|---|
| • **Follow the suggested actions in the order in which they are listed in the Action column until the problem is solved.**<br>• **If an action step is preceded by "(Trained technician only)," that step must be performed only by a trained technician.**<br>• **Go to the IBM support website at http://www.ibm.com/supportportal/ to check for technical information, hints, tips, and new device drivers or to submit a request for information.** | |
| **Symptom** | **Action** |
| The server goes directly to the POST Event Viewer when it is turned on. | 1. Correct any errors that are indicated by the LCD system information display panel (see Light path diagnostics).<br>2. Make sure that the server supports all the microprocessors and that the microprocessors match in speed and cache size. To view the microprocessor information, run the Setup utility and select **System Information** > **System Summary** > **Processor Details**.<br>3. (Trained technician only) Make sure that microprocessor 1 is seated correctly.<br>4. (Trained technician only) Remove microprocessor 2 and restart the server.<br>5. Replace the following components one at a time, in the order shown, restarting the server each time:<br>a. (Trained technician only) Microprocessor<br>b. (Trained technician only) System board |

## Monitor and video problems

Some IBM monitors have their own self-tests. If you suspect a problem with your monitor, see the documentation that comes with the monitor for instructions for testing and adjusting the monitor. If you cannot diagnose the problem, call for service.

- **Follow the suggested actions in the order in which they are listed in the Action column until the problem is solved.**
- **If an action step is preceded by "(Trained technician only)," that step must be performed only by a trained technician.**
- **Go to the IBM support website at http://www.ibm.com/supportportal/ to check for technical information, hints, tips, and new device drivers or to submit a request for information.**

| Symptom | Action |
|---|---|
| Testing the monitor. | 1. Make sure that the monitor cables are firmly connected.<br>2. Try using a different monitor on the server, or try using the monitor that is being tested on a different server.<br>3. Run the diagnostic programs. If the monitor passes the diagnostic programs, the problem might be a video device driver.<br>4. (Trained technician only) Replace the system board. |
| The screen is blank. | 1. If the server is attached to a KVM switch, bypass the KVM switch to eliminate it as a possible cause of the problem: connect the monitor cable directly to the correct connector on the rear of the server.<br>2. The IMM2 remote presence function is disabled if you install an optional video adapter. To use the IMM2 remote presence function, remove the optional video adapter.<br>3. If the server installed with the graphical adapters while turning on the server, the IBM logo displays on the screen after approximately 3 minutes. This is normal operation while the system loads.<br>4. Make sure that:<br>• The server is turned on. If there is no power to the server, see "Power problems" on page 100.<br>• The monitor cables are connected correctly.<br>• The monitor is turned on and the brightness and contrast controls are adjusted correctly.<br>5. Make sure that the correct server is controlling the monitor, if applicable.<br>6. Make sure that damaged server firmware is not affecting the video; see "Updating the firmware" on page 43.<br>7. Replace the following components one at a time, in the order shown, restarting the server each time:<br>a. Monitor<br>b. Video adapter (if one is installed)<br>c. (Trained technician only) System board.<br>8. See "Solving undetermined problems" on page 115. |

| | |
|---|---|
| • **Follow the suggested actions in the order in which they are listed in the Action column until the problem is solved.**<br>• **If an action step is preceded by "(Trained technician only)," that step must be performed only by a trained technician.**<br>• **Go to the IBM support website at http://www.ibm.com/supportportal/ to check for technical information, hints, tips, and new device drivers or to submit a request for information.** | |
| **Symptom** | **Action** |
| The monitor works when you turn on the server, but the screen goes blank when you start some application programs. | 1. Make sure that:<br>• The application program is not setting a display mode that is higher than the capability of the monitor.<br>• You installed the necessary device drivers for the application.<br>2. Run video diagnostics (see "Running the DSA Preboot diagnostic programs" on page 86).<br>• If the server passes the video diagnostics, the video is good; see "Solving undetermined problems" on page 115.<br>• (Trained technician only) If the server fails the video diagnostics, replace the system board. |
| The monitor has screen jitter, or the screen image is wavy, unreadable, rolling, or distorted. | 1. If the monitor self-tests show that the monitor is working correctly, consider the location of the monitor. Magnetic fields around other devices (such as transformers, appliances, fluorescents, and other monitors) can cause screen jitter or wavy, unreadable, rolling, or distorted screen images. If this happens, turn off the monitor.<br>**Attention:** Moving a color monitor while it is turned on might cause screen discoloration.<br>Move the device and the monitor at least 305 mm (12 in.) apart, and turn on the monitor.<br>**Notes:**<br>a. To prevent diskette drive read/write errors, make sure that the distance between the monitor and any external diskette drive is at least 76 mm (3 in.).<br>b. Non-IBM monitor cables might cause unpredictable problems.<br>2. Reseat the monitor cable.<br>3. Replace the components listed in step 2 one at a time, in the order shown, restarting the server each time:<br>a. Monitor cable<br>b. Video adapter (if one is installed)<br>c. Monitor<br>d. (Trained technician only) System board. |
| Wrong characters appear on the screen. | 1. If the wrong language is displayed, update the server firmware to the latest level (see "Updating the firmware" on page 43) with the correct language.<br>2. Reseat the monitor cable.<br>3. Replace the components listed in step 2 one at a time, in the order shown, restarting the server each time:<br>a. Monitor cable<br>b. Video adapter (if one is installed)<br>c. Monitor<br>d. (Trained technician only) System board. |

## Network connection problems

Use the troubleshooting tables to find solutions to problems that have identifiable symptoms.

- **Follow the suggested actions in the order in which they are listed in the Action column until the problem is solved.**
- **If an action step is preceded by "(Trained technician only)," that step must be performed only by a trained technician.**
- **Go to the IBM support website at http://www.ibm.com/supportportal/ to check for technical information, hints, tips, and new device drivers or to submit a request for information.**

| Symptom | Action |
|---|---|
| Unable to wake the server using the Wake on LAN feature. | 1. If you are using the ML2 network adapter and the server is connected to the network using slot 3 connector, check the system-error log or IMM2 system event log (see "Event logs" on page 81), make sure:<br>a. FAN1 and FAN2 are running in standby mode if ML2 adapter is installed..<br>b. The room temperature is not too high (see "Server features and specifications" on page 8).<br>c. The air vents are not blocked.<br>d. The air baffle is installed securely.<br>2. Reseat the ML2 network adapter (see "Removing an adapter" on page 185 and "Replacing an adapter" on page 190).<br>3. Turn off the server and disconnect it from the power source; then, wait 10 seconds before restarting the server.<br>4. If the problem still remains, replace the dual-port network adapter. |
| Log in failed by using LDAP account with SSL enabled. | 1. Make sure the license key is valid.<br>2. Generate a new license key and log in again. |

## Optional-device problems

Use the troubleshooting tables to find solutions to problems that have identifiable symptoms.

- **Follow the suggested actions in the order in which they are listed in the Action column until the problem is solved.**
- **If an action step is preceded by "(Trained technician only)," that step must be performed only by a trained technician.**
- **Go to the IBM support website at http://www.ibm.com/supportportal/ to check for technical information, hints, tips, and new device drivers or to submit a request for information.**

| Symptom | Action |
|---|---|
| An IBM optional device that was just installed does not work. | 1. Make sure that:<br>• The device is designed for the server (see http://www.ibm.com/systems/info/x86servers/serverproven/compat/us/).<br>• You followed the installation instructions that came with the device and the device is installed correctly.<br>• You have not loosened any other installed devices or cables.<br>• You updated the configuration information in the Setup utility. Whenever memory or any other device is changed, you must update the configuration.<br>2. Reseat the device that you just installed.<br>3. Replace the device that you just installed. |

| • **Follow the suggested actions in the order in which they are listed in the Action column until the problem is solved.**<br>• **If an action step is preceded by "(Trained technician only)," that step must be performed only by a trained technician.**<br>• **Go to the IBM support website at http://www.ibm.com/supportportal/ to check for technical information, hints, tips, and new device drivers or to submit a request for information.** | |
|---|---|
| **Symptom** | **Action** |
| An IBM optional device that worked previously does not work now. | 1. Make sure that all of the cable connections for the device are secure.<br>2. If the device comes with test instructions, use those instructions to test the device.<br>3. If the failing device is a SAS/SATA device, make sure that:<br>• The cables for all external SAS and SATA devices are connected correctly.<br>• The last device in each SAS and SATA chain, or the end of the SAS and SATA cable, is terminated correctly.<br>• Any external SAS and SATA device is turned on. You must turn on an external SAS and SATA device before you turn on the server.<br>4. Reseat the failing device.<br>5. Replace the failing device. |

## Power problems

Use the troubleshooting tables to find solutions to problems that have identifiable symptoms.

| | |
|---|---|
| • **Follow the suggested actions in the order in which they are listed in the Action column until the problem is solved.**<br>• **If an action step is preceded by "(Trained technician only)," that step must be performed only by a trained technician.**<br>• **Go to the IBM support website at http://www.ibm.com/supportportal/ to check for technical information, hints, tips, and new device drivers or to submit a request for information.** | |
| **Symptom** | **Action** |
| The power-control button does not work, and the reset button does not work (the server does not start).<br>**Note:** The power-control button will not function until approximately 5 to 10 seconds after the server has been connected to power. | 1. Make sure that the power-control button is working correctly:<br>a. Disconnect the server power cords.<br>b. Reconnect the power cords.<br>c. (Trained technician only) Reseat the operator information panel cable, and then repeat steps 1a and 1b.<br>• (Trained technician only) If the server starts, reseat the operator information panel. If the problem remains, replace the operator information panel.<br>• If the server does not start, bypass the power-control button by using the force power-on jumper (see "System-board switches, jumpers, and buttons" on page 30). If the server starts, reseat the operator information panel. If the problem remains, replace the operator information panel.<br>2. Make sure that the reset button is working correctly:<br>a. Disconnect the server power cords.<br>b. Reconnect the power cords.<br>c. (Trained technician only) Reseat the operator information panel cable, and then repeat steps 2a and 2b.<br>• (Trained technician only) If the server starts, replace the operator information panel.<br>• If the server does not start, go to step 3.<br>3. Make sure that both power supplies installed in the server are of the same type. Mixing different ratings of power supplies in the server will cause a system error (CONFG icon will be shown on the LCD system information display panel).<br>4. Make sure that:<br>• The power cords are correctly connected to the server and to a working electrical outlet.<br>• The type of memory that is installed is correct.<br>• The DIMMs are fully seated.<br>• The LEDs on the power supply do not indicate a problem.<br>• The microprocessors are installed in the correct sequence.<br>5. Reseat the following components:<br>a. Operator information panel connector<br>b. Power supplies<br>6. Replace the components listed in step 5 one at a time, in the order shown, restarting the server each time.<br>7. If you just installed an optional device, remove it, and restart the server. If the server now starts, you might have installed more devices than the power supply supports.<br>8. See "Power-supply LEDs" on page 78.<br>9. See "Solving undetermined problems" on page 115. |

- **Follow the suggested actions in the order in which they are listed in the Action column until the problem is solved.**
- **If an action step is preceded by "(Trained technician only)," that step must be performed only by a trained technician.**
- **Go to the IBM support website at http://www.ibm.com/supportportal/ to check for technical information, hints, tips, and new device drivers or to submit a request for information.**

| Symptom | Action |
|---|---|
| The Pwr rail A error has been recorded in the system event log. | 1. Disconnect the server power cords.<br>2. (Trained technician only) remove microprocessor 1 if the Pwr rail A error has been recorded in the system event log.<br>3. (Trained technician only) replace the system board (see "Removing the system board" on page 276 and "Replacing the system board" on page 279).<br>4. Reinstall the component; then, restarting the server. If the Pwr rail A error has been recorded in the system event log again, the component that you just reinstalled is defective. Replace the defective component.<br>• (Trained technician only) Microprocessor 1 (see "Removing a microprocessor and heat sink" on page 258 and "Replacing a microprocessor and heat sink" on page 264). |
| The Pwr rail B error has been recorded in the system event log. | 1. Disconnect the server power cords.<br>2. Remove DIMMs 1 through 12 if Pwr rail B error has been recorded in the system event log.<br>3. Restart the server. If the Pwr rail B error has been recorded in the system event log again, (trained technician only) replace the system board (see "Removing the system board" on page 276 and "Replacing the system board" on page 279).<br>4. Reinstall the DIMM one at a time, restarting the server each time. If the Pwr rail B error has been recorded in the system event log again, the DIMM that you just reinstalled is defective. Replace the defective component. |
| The Pwr rail C error has been recorded in the system event log. | 1. Disconnect the server power cords.<br>2. (Trained technician only) remove microprocessor 2 if Pwr rail C error has been recorded in the system event log.<br>3. Restart the server. If the Pwr rail C error has been recorded in the system event log again, (trained technician only) replace the system board (see "Removing the system board" on page 276 and "Replacing the system board" on page 279).<br>4. Reinstall the Processor; then, restarting the server. If the Pwr rail C error has been recorded in the system event log again, the Processor that you just reinstalled is defective. Replace the defective component.<br>• (Trained technician only) Microprocessor 2 (see "Removing a microprocessor and heat sink" on page 258 and "Replacing a microprocessor and heat sink" on page 264). |
| The Pwr rail D error has been recorded in the system event log. | 1. Disconnect the server power cords.<br>2. Remove DIMMs 13 through 24 if Pwr rail D error has been recorded in the system event log.<br>3. Restart the server. If the Pwr rail D error has been recorded in the system event log again, (trained technician only) replace the system board (see "Removing the system board" on page 276 and "Replacing the system board" on page 279).<br>4. Reinstall the DIMM one at a time, restarting the server each time. If the Pwr rail B error has been recorded in the system event log again, the DIMM that you just reinstalled is defective. Replace the defective component. |

| | |
|---|---|
| • **Follow the suggested actions in the order in which they are listed in the Action column until the problem is solved.**<br>• **If an action step is preceded by "(Trained technician only)," that step must be performed only by a trained technician.**<br>• **Go to the IBM support website at http://www.ibm.com/supportportal/ to check for technical information, hints, tips, and new device drivers or to submit a request for information.** | |
| **Symptom** | **Action** |
| The Pwr rail E error has been recorded in the system event log. | 1. Disconnect the server power cords.<br>2. Remove the following components if the Pwr rail E error has been recorded in the system event log:<br>• Optional DVD drive (if one is installed)<br>• Hard disk drives at backplane assembly 1 and/or backplane assembly 2<br>• Hard disk drive backplane assembly 1 and/or backplane assembly 2<br>• LCD monitor connected to front VGA port (if one is present)<br>• Optional adapter (if one is present) installed in riser-card assembly 2<br>• Riser-card assembly 2<br>3. Restart the server. If the Pwr rail E error has been recorded in the system event log again, (trained technician only) replace the system board (see "Removing the system board" on page 276 and "Replacing the system board" on page 279).<br>4. Reinstall the components one at a time, in the order shown, restarting the server each time. If the Pwr rail E error has been recorded in the system event log again, the component that you just reinstalled is defective. Replace the defective component.<br>• Riser-card assembly 2 (See "Removing a riser-card assembly" on page 180 and "Replacing a riser-card assembly" on page 181).<br>• Optional adapter (if one is present) installed in riser-card assembly 2 (See "Removing an adapter" on page 185 and "Replacing an adapter" on page 190).<br>• LCD monitor connected to front VGA port (if one is present)<br>• Hard disk drive backplane assembly 1 and/or backplane assembly 2<br>• Hard disk drives at backplane assembly 1 and/or backplane assembly 2<br>• Optional DVD drive, if one is present (see "Removing an optical drive" on page 163 and "Replacing an optical drive" on page 164). |

| | |
|---|---|
| • **Follow the suggested actions in the order in which they are listed in the Action column until the problem is solved.**<br>• **If an action step is preceded by "(Trained technician only)," that step must be performed only by a trained technician.**<br>• **Go to the IBM support website at http://www.ibm.com/supportportal/ to check for technical information, hints, tips, and new device drivers or to submit a request for information.** | |
| **Symptom** | **Action** |
| The Pwr rail F error has been recorded in the system event log. | 1. Disconnect the server power cords.<br>2. Remove the following components if the Pwr rail F error has been recorded in the system event log:<br>• Hard disk drives at backplane assembly 3<br>• Hard disk drive backplane assembly 3<br>• Rear Hard disk drives<br>• Rear two Hard-disk-drive kit<br>• Optional adapter (if one is present) installed in riser-card assembly 1<br>• Riser-card assembly 1<br>• PCIe Solid state drives<br>• PCIe Solid state drive backplane assembly<br>• USB devices<br>• SD adapter<br>• LCD monitor connected to rear VGA port (if one is present)<br>3. Restart the server. If the Pwr rail F error has been recorded in the system event log again, (trained technician only) replace the system board (see "Removing the system board" on page 276 and "Replacing the system board" on page 279).<br>4. Reinstall the components one at a time, in the order shown, restarting the server each time. If the Pwr rail F error has been recorded in the system event log again, the component that you just reinstalled is defective. Replace the defective component.<br>• LCD monitor connected to rear VGA port (if one is present)<br>• SD adapter<br>• USB devices<br>• PCIe Solid state drive backplane assembly<br>• PCIe Solid state drives<br>• Riser-card assembly 1 (See "Removing a riser-card assembly" on page 180 and "Replacing a riser-card assembly" on page 181.<br>• Optional adapter (if one is present) installed in riser-card assembly 1 (See "Removing an adapter" on page 185 and "Replacing an adapter" on page 190.<br>• Rear two Hard-disk-drive kit<br>• Rear Hard disk drives<br>• Hard disk drive backplane assembly 3<br>• Hard disk drives at backplane assembly 3 |

- **Follow the suggested actions in the order in which they are listed in the Action column until the problem is solved.**
- **If an action step is preceded by "(Trained technician only)," that step must be performed only by a trained technician.**
- **Go to the IBM support website at http://www.ibm.com/supportportal/ to check for technical information, hints, tips, and new device drivers or to submit a request for information.**

| Symptom | Action |
|---|---|
| The Pwr rail G error has been recorded in the system event log. | 1. Disconnect the server power cords.<br>2. Remove the following components if the Pwr rail G error has been recorded in the system event log:<br>• Raid Card in Raid slot<br>• Optional adapter (if one is present) in PCIe slot 4<br>• Optional adapter (if one is present) in PCIe slot 5<br>• Optional adapter (if one is present) installed in riser-card assembly 1<br>• Riser-card assembly 1<br>• Optional adapter (if one is present) installed in riser-card assembly 2 (or Rear Hard disk Drives in Rear two Hard-disk-drive kit on Riser 2)<br>• Riser-card assembly 2 (or Rear two Hard-disk-drive kit on Riser 2)<br>• Microprocessor 2<br>– (Trained technician only) Microprocessor 2 (See "Removing a microprocessor and heat sink" on page 258 and "Replacing a microprocessor and heat sink" on page 264).<br>3. Restart the server. If the Pwr rail G error has been recorded in the system event log again, (trained technician only) replace the system board (see "Removing the system board" on page 276 and "Replacing the system board" on page 279).<br>4. Reinstall the components one at a time, in the order shown, restarting the server each time. If the Pwr rail G error has been recorded in the system event log again, the component that you just reinstalled is defective. Replace the defective component.<br>• Microprocessor 2<br>– (Trained technician only) Microprocessor 2 (See "Removing a microprocessor and heat sink" on page 258 and "Replacing a microprocessor and heat sink" on page 264).<br>• Riser-card assembly 2 (See "Removing a riser-card assembly" on page 180 and "Replacing a riser-card assembly" on page 181) or Rear two Hard-disk-drive kit on Riser 2.<br>• Optional adapter (if one is present) installed in riser-card assembly 2 (See "Removing an adapter" on page 185 and "Replacing an adapter" on page 190) or Rear Hard disk Drives in Rear two Hard-disk-drive kit on Riser 2.<br>• Riser-card assembly 1 (See "Removing a riser-card assembly" on page 180 and "Replacing a riser-card assembly" on page 181).<br>• Optional adapter (if one is present) installed in riser-card assembly 1 (See "Removing an adapter" on page 185 and "Replacing an adapter" on page 190).<br>• Optional adapter (if one is present) in PCIe slot 5<br>• Optional adapter (if one is present) in PCIe slot 4<br>• Raid Card in Raid slot<br>5. (Trained technician only) remove all components<br>6. (Trained technician only) replace the system board (see "Removing the system board" on page 276 and "Replacing the system board" on page 279).<br>7. Reinstall the Microprocessor 1; then, restarting the server. If the Pwr rail G error has been recorded in the system event log again, the Processor that you just reinstalled is defective. Replace the defective Processor.<br>• (Trained technician only) Microprocessor 1 (See "Removing a microprocessor and heat sink" on page 258 and "Replacing a microprocessor and heat sink" on page 264). |

- **Follow the suggested actions in the order in which they are listed in the Action column until the problem is solved.**
- **If an action step is preceded by "(Trained technician only)," that step must be performed only by a trained technician.**
- **Go to the IBM support website at http://www.ibm.com/supportportal/ to check for technical information, hints, tips, and new device drivers or to submit a request for information.**

| Symptom | Action |
|---|---|
| The Pwr rail H error has been recorded in the system event log. | 1. Disconnect the server power cords.<br>2. Remove the following components if the Pwr rail H error has been recorded in the system event log:<br>• Hard disk drives at backplane assembly 3<br>• Hard disk drive backplane assembly 3<br>• PCIe Solid state drives<br>• PCIe Solid state drive backplane assembly<br>3. Restart the server. If the Pwr rail H error has been recorded in the system event log again, (trained technician only) replace the system board (see "Removing the system board" on page 276 and "Replacing the system board" on page 279).<br>4. Reinstall the components one at a time, in the order shown, restarting the server each time. If the Pwr rail H error has been recorded in the system event log again, the component that you just reinstalled is defective. Replace the defective component.<br>• Hard disk drive backplane assembly 3<br>• Hard disk drives at backplane assembly 3<br>• PCIe Solid state drive backplane assembly<br>• PCIe Solid state drives |
| The Pwr rail I error has been recorded in the system event log. | 1. Disconnect the server power cords.<br>2. Remove the following components if the Pwr rail I error has been recorded in the system event log:<br>• Hard disk drives at backplane assembly 1 and/or backplane assembly 2<br>• Hard disk drive backplane assembly 1 and/or backplane assembly 2<br>3. Restart the server. If the Pwr rail I error has been recorded in the system event log again, (trained technician only) replace the system board (see "Removing the system board" on page 276 and "Replacing the system board" on page 279).<br>4. Reinstall the components one at a time, in the order shown, restarting the server each time. If the Pwr rail I error has been recorded in the system event log again, the component that you just reinstalled is defective. Replace the defective component.<br>• Hard disk drive backplane assembly 1 and/or backplane assembly 2<br>• Hard disk drives at backplane assembly 1 and/or backplane assembly 2 |
| The Pwr rail J error has been recorded in the system event log. | 1. Disconnect the server power cords.<br>2. Remove Fans 1 through 6 if Pwr rail J error has been recorded in the system event log.<br>3. Restart the server. If the Pwr rail J error has been recorded in the system event log again, (trained technician only) replace the system board (see "Removing the system board" on page 276 and "Replacing the system board" on page 279).<br>4. Reinstall the Fans one at a time, restarting the server each time. If the Pwr rail J error has been recorded in the system event log again, the Fan that you just reinstalled is defective. Replace the defective component. |

| | |
|---|---|
| • **Follow the suggested actions in the order in which they are listed in the Action column until the problem is solved.**<br>• **If an action step is preceded by "(Trained technician only)," that step must be performed only by a trained technician.**<br>• **Go to the IBM support website at http://www.ibm.com/supportportal/ to check for technical information, hints, tips, and new device drivers or to submit a request for information.** | |
| **Symptom** | **Action** |
| The Pwr rail K error has been recorded in the system event log. | 1. Disconnect the server power cords.<br>2. Remove the following components if the Pwr rail K error has been recorded in the system event log:<br>• Optional adapter (if one is present) installed in riser-card assembly 1 (or Rear Hard disk Drives in Rear two Hard-disk-drive kit on Riser 1)<br>• Riser-card assembly 1 (or Rear two Hard-disk-drivekit on Riser 1)<br>• Optional adapter (if one is present) installed in PCIe slot 4<br>• Optional adapter (if one is present) installed in PCIe slot 5<br>• Raid Card in Raid slot<br>3. Restart the server. If the Pwr rail H error has been recorded in the system event log again, (trained technician only) replace the system board (see "Removing the system board" on page 276 and "Replacing the system board" on page 279).<br>4. Reinstall the components one at a time, in the order shown, restarting the server each time. If the Pwr rail K error has been recorded in the system event log again, the component that you just reinstalled is defective. Replace the defective component.<br>• Raid Card in Raid slot<br>• Optional adapter (if one is present) installed in PCIe slot 5<br>• Optional adapter (if one is present) installed in PCIe slot 4<br>• Riser-card assembly 1 (or Rear two Hard-disk-drivekit on Riser 1)<br>• Optional adapter (if one is present) installed in riser-card assembly 1 (or Rear Hard disk Drives in Rear two Hard-disk-drive kit on Riser 1) |
| The Pwr rail L error has been recorded in the system event log. | 1. Disconnect the server power cords.<br>2. Remove the following components if the Pwr rail L error has been recorded in the system event log:<br>• Optional PCI adaptor power cable-correlated PCI adaptor<br>• PCI Riser Card Assembly where the optional PCI adaptor power cable-correlated PCI adaptor is installed<br>– Optional PCI adaptor power cable (if one is present)<br>3. Restart the server. If the Pwr rail L error has been recorded in the system event log again, (trained technician only) replace the system board (see "Removing the system board" on page 276 and "Replacing the system board" on page 279).<br>4. Reinstall the component one at a time, in the order shown, restarting the server. If the Pwr rail L error has been recorded in the system event log again, the component that you just reinstalled is defective. Replace the defective component.<br>• Optional PCI adaptor power cable (if one is present)<br>• PCI Riser Card Assembly where the optional PCI adaptor power cable-correlated PCI adaptor is installed<br>• Optional PCI adaptor power cable-correlated PCI adaptor |

| | |
|---|---|
| • **Follow the suggested actions in the order in which they are listed in the Action column until the problem is solved.**<br>• **If an action step is preceded by "(Trained technician only)," that step must be performed only by a trained technician.**<br>• **Go to the IBM support website at http://www.ibm.com/supportportal/ to check for technical information, hints, tips, and new device drivers or to submit a request for information.** | |
| **Symptom** | **Action** |
| The Pwr rail M error has been recorded in the system event log. | 1. Disconnect the server power cords.<br>2. Remove the following components if the Pwr rail M error has been recorded in the system event log:<br>• Optional PCI adaptor power cable-correlated PCI adaptor<br>• PCI Riser Card Assembly where the optional PCI adaptor power cable-correlated PCI adaptor is installed<br>• Optional PCI adaptor power cable (if one is present)<br>3. Restart the server. If the Pwr rail M error has been recorded in the system event log again, (trained technician only) replace the system board (see "Removing the system board" on page 276 and "Replacing the system board" on page 279).<br>4. Reinstall the components one at a time, in the order shown, restarting the server each time. If the Pwr rail M error has been recorded in the system event log again, the component that you just reinstalled is defective. Replace the defective component.<br>• Optional PCI adaptor power cable (if one is present)<br>• PCI Riser Card Assembly where the optional PCI adaptor power cable-correlated PCI adaptor is installed<br>• Optional PCI adaptor power cable-correlated PCI adaptor |
| The server does not turn off. | 1. Determine whether you are using an Advanced Configuration and Power Interface (ACPI) or a non-ACPI operating system. If you are using a non-ACPI operating system, complete the following steps:<br>a. Press `Ctrl+Alt+Delete`.<br>b. Turn off the server by pressing the power-control button and hold it down for 5 seconds.<br>c. Restart the server.<br>d. If the server fails POST and the power-control button does not work, disconnect the power cord for 20 seconds; then, reconnect the power cord and restart the server.<br>2. If the problem remains or if you are using an ACPI-aware operating system, suspect the system board. |
| The server unexpectedly shuts down, and the LEDs on the operator information panel are not lit. | See "Solving undetermined problems" on page 115. |

## Serial-device problems

Use the troubleshooting tables to find solutions to problems that have identifiable symptoms.

- **Follow the suggested actions in the order in which they are listed in the Action column until the problem is solved.**
- **If an action step is preceded by "(Trained technician only)," that step must be performed only by a trained technician.**
- **Go to the IBM support website at http://www.ibm.com/supportportal/ to check for technical information, hints, tips, and new device drivers or to submit a request for information.**

| Symptom | Action |
|---|---|
| The number of serial ports that are identified by the operating system is less than the number of installed serial ports. | 1. Make sure that:<br>• Each port is assigned a unique address in the Setup utility and none of the serial ports is disabled.<br>• The serial-port adapter (if one is present) is seated correctly.<br>2. Reseat the serial port adapter.<br>3. Replace the serial port adapter. |
| A serial device does not work. | 1. Make sure that:<br>• The device is compatible with the server.<br>• The serial port is enabled and is assigned a unique address.<br>• The device is connected to the correct connector (see "System-board internal connectors" on page 29).<br>2. Reseat the following components:<br>a. Failing serial device<br>b. Serial cable<br>3. Replace the components listed in step 2 one at a time, in the order shown, restarting the server each time.<br>4. (Trained technician only) Replace the system board. |

## ServerGuide problems

Use the troubleshooting tables to find solutions to problems that have identifiable symptoms.

- **Follow the suggested actions in the order in which they are listed in the Action column until the problem is solved.**
- **If an action step is preceded by "(Trained technician only)," that step must be performed only by a trained technician.**
- **Go to the IBM support website at http://www.ibm.com/supportportal/ to check for technical information, hints, tips, and new device drivers or to submit a request for information.**

| Symptom | Action |
|---|---|
| The *ServerGuide Setup and Installation* CD will not start. | 1. Make sure that the server supports the ServerGuide program and has a startable (bootable) CD or DVD drive.<br>2. If the startup (boot) sequence settings have been changed, make sure that the CD or DVD drive is first in the startup sequence.<br>3. If more than one CD or DVD drive is installed, make sure that only one drive is set as the primary drive. Start the CD from the primary drive. |
| The MegaRAID Storage Manager program cannot view all installed drives, or the operating system cannot be installed. | 1. Make sure that the hard disk drive is connected correctly.<br>2. Make sure that the SAS/SATA hard disk drive cables are securely connected. |

| | |
|---|---|
| • **Follow the suggested actions in the order in which they are listed in the Action column until the problem is solved.**<br>• **If an action step is preceded by "(Trained technician only)," that step must be performed only by a trained technician.**<br>• **Go to the IBM support website at http://www.ibm.com/supportportal/ to check for technical information, hints, tips, and new device drivers or to submit a request for information.** | |
| **Symptom** | **Action** |
| The operating-system installation program continuously loops. | Make more space available on the hard disk. |
| The ServerGuide program will not start the operating-system CD. | Make sure that the operating-system CD is supported by the ServerGuide program. For a list of supported operating-system versions, go to http://www.ibm.com/support/entry/portal/docdisplay?lndocid=SERV-GUIDE, click the link for your ServerGuide version, and scroll down to the list of supported Microsoft Windows operating systems. |
| The operating system cannot be installed; the option is not available. | Make sure that the server supports the operating system. If it does, either no logical drive is defined (SCSI RAID servers), or the ServerGuide System Partition is not present. Run the ServerGuide program and make sure that setup is complete. |

## Software problems

| | |
|---|---|
| • **Follow the suggested actions in the order in which they are listed in the Action column until the problem is solved.**<br>• **If an action step is preceded by "(Trained technician only)," that step must be performed only by a trained technician.**<br>• **Go to the IBM support website at http://www.ibm.com/supportportal/ to check for technical information, hints, tips, and new device drivers or to submit a request for information.** | |
| **Symptom** | **Action** |
| You suspect a software problem. | 1. To determine whether the problem is caused by the software, make sure that:<br>• The server has the minimum memory that is needed to use the software. For memory requirements, see the information that comes with the software. If you have just installed an adapter or memory, the server might have a memory-address conflict.<br>• The software is designed to operate on the server.<br>• Other software works on the server.<br>• The software works on another server.<br>2. If you received any error messages when using the software, see the information that comes with the software for a description of the messages and suggested solutions to the problem.<br>3. Contact the software vendor. |

## Universal Serial Bus (USB) port problems

Use the troubleshooting tables to find solutions to problems that have identifiable symptoms.

- **Follow the suggested actions in the order in which they are listed in the Action column until the problem is solved.**
- **If an action step is preceded by "(Trained technician only)," that step must be performed only by a trained technician.**
- **Go to the IBM support website at http://www.ibm.com/supportportal/ to check for technical information, hints, tips, and new device drivers or to submit a request for information.**

| Symptom | Action |
|---|---|
| A USB device does not work. | 1. Make sure that:<br>• The correct USB device driver is installed.<br>• The operating system supports USB devices.<br>2. Make sure that the USB configuration options are set correctly in the Setup utility (see "Using the Setup utility" on page 48 for more information).<br>3. If you are using a USB hub, disconnect the USB device from the hub and connect it directly to the server. |

## Video problems

Use the troubleshooting tables to find solutions to problems that have identifiable symptoms.

See "Monitor and video problems" on page 97.

# Solving power problems

Power problems can be difficult to solve. For example, a short circuit can exist anywhere on any of the power distribution buses. Usually, a short circuit will cause the power subsystem to shut down because of an overcurrent condition.

### About this task

To diagnose a power problem, use the following general procedure:

### Procedure

1. Turn off the server and disconnect all power cords.
2. Check for loose cables in the power subsystem. Also check for short circuits, for example, if a loose screw is causing a short circuit on a circuit board.
3. Check the lit LEDs on the light path diagnostics panel (see Light path diagnostics LEDs).
4. If the check log LED on the light path diagnostics panel is lit, check the IMM event log for faulty Pwr rail and complete the following steps. Table 7 on page 112 identifies the components that are associated with each Pwr rail and the order in which to troubleshoot the components.
   a. Disconnect the cables and power cords to all internal and external devices (see "Internal cable routing and connectors" on page 131). Leave the power-supply cords connected.
   b. For Pwr rail A error, complete the following steps:
      1) (Trained technician only) Replace the system board.
      2) (Trained technician only) Replace the microprocessor.

c. For other rail errors (Pwr rail A error, see step 4b on page 111), remove each component that is associated with the faulty Pwr rail, one at a time, in the sequence indicated in Table 7, restarting the server each time, until the cause of the overcurrent condition is identified.

*Table 7. Components associated with power rail errors*

| Pwr rail error in the IMM event log | Components |
|---|---|
| Pwr rail A error | • Microprocessor 1 |
| Pwr rail B error | • DIMMs 1 through 12 |
| Pwr rail C error | • Microprocessor 2 |
| Pwr rail D error | • DIMMs 13 through 24 |
| Pwr rail E error | • Optional DVD drive (if one is installed)<br>• Hard disk drives at backplane assembly 1 and/or backplane assembly 2<br>• Hard disk drive backplane assembly 1 and/or backplane assembly 2<br>• LCD monitor connected to front VGA port (if one is present)<br>• Optional adapter (if one is present) installed in riser-card assembly 2<br>• Riser-card assembly 2 |
| Pwr rail F error | • Hard disk drives at backplane assembly 3<br>• Hard disk drive backplane assembly 3<br>• Rear Hard disk drives<br>• Rear two Hard-disk-drive kit<br>• Optional adapter (if one is present) installed in riser-card assembly 1<br>• Riser-card assembly 1<br>• PCIe Solid state drives<br>• PCIe Solid state drive backplane assembly<br>• USB devices<br>• SD adapter<br>• LCD monitor connected to rear VGA port (if one is present) |
| Pwr rail G error | • Raid Card in Raid slot<br>• Optional adapter (if one is present) in PCIe slot 4<br>• Optional adapter (if one is present) in PCIe slot 5<br>• Optional adapter (if one is present) installed in riser-card assembly 1<br>• Riser-card assembly 1<br>• Optional adapter (if one is present) installed in riser-card assembly 2 (or Rear Hard disk Drives in Rear two Hard-disk-drive kit on Riser 2)<br>• Riser-card assembly 2 (or Rear two Hard-disk-drive kit on Riser 2)<br>• Microprocessor 2<br>• Microprocessor 1 |

*Table 7. Components associated with power rail errors (continued)*

| Pwr rail error in the IMM event log | Components |
|---|---|
| Pwr rail H error | • Hard disk drives at backplane assembly 3<br>• Hard disk drive backplane assembly 3<br>• PCIe Solid state drives<br>• PCIe Solid state drive backplane assembly |
| Pwr rail I error | • Hard disk drives at backplane assembly 1 and/or backplane assembly 2<br>• Hard disk drive backplane assembly 1 and/or backplane assembly 2 |
| Pwr rail J error | • Fans 1 through 6 |
| Pwr rail K error | • Optional adapter (if one is present) installed in riser-card assembly 1 (or Rear Hard disk Drives in Rear two Hard-disk-drive kit on Riser 1)<br>• Riser-card assembly 1 (or Rear two Hard-disk-drive kit on Riser 1)<br>• Optional adapter (if one is present) installed in PCIe slot 4<br>• Optional adapter (if one is present) installed in PCIe slot 5<br>• Raid Card in Raid slot |
| Pwr rail L error | • Optional PCI adaptor power cable-correlated PCI adaptor<br>• PCI Riser Card Assembly where the optional PCI adaptor power cable-correlated PCI adaptor is installed<br>• Optional PCI adaptor power cable (if one is present) |
| Pwr rail M error | • Optional PCI adaptor power cable-correlated PCI adaptor<br>• PCI Riser Card Assembly where the optional PCI adaptor power cable-correlated PCI adaptor is installed<br>• Optional PCI adaptor power cable (if one is present) |

   d. Replace the identified component.
5. Remove the adapters and disconnect the cables and power cords to all internal and external devices until the server is at the minimum configuration that is required for the server to start (see "Power-supply LEDs" on page 78 for the minimum configuration).
6. Reconnect all ac power cords and turn on the server. If the server starts successfully, reseat the adapters and devices one at a time until the problem is isolated.

## Results

If the server does not start from the minimum configuration, see "Power-supply LEDs" on page 78 to replace the components in the minimum configuration one at a time until the problem is isolated.

## Solving Ethernet controller problems

The method that you use to test the Ethernet controller depends on which operating system you are using. See the operating-system documentation for information about Ethernet controllers, and see the Ethernet controller device-driver readme file.

### About this task

Try the following procedures:

### Procedure

- Make sure that the correct device drivers, which come with the server are installed and that they are at the latest level.
- Make sure that the Ethernet cable is installed correctly.
  - The cable must be securely attached at all connections. If the cable is attached but the problem remains, try a different cable.
  - If you set the Ethernet controller to operate at 100 Mbps, you must use Category 5 cabling.
  - If you directly connect two servers (without a hub), or if you are not using a hub with X ports, use a crossover cable. To determine whether a hub has an X port, check the port label. If the label contains an X, the hub has an X port.
- Determine whether the hub supports auto-negotiation. If it does not, try configuring the integrated Ethernet controller manually to match the speed and duplex mode of the hub.
- Check the Ethernet controller LEDs on the rear panel of the server. These LEDs indicate whether there is a problem with the connector, cable, or hub.
  - The Ethernet link status LED is lit when the Ethernet controller receives a link pulse from the hub. If the LED is off, there might be a defective connector or cable or a problem with the hub.
  - The Ethernet transmit/receive activity LED is lit when the Ethernet controller sends or receives data over the Ethernet network. If the Ethernet transmit/receive activity is off, make sure that the hub and network are operating and that the correct device drivers are installed.
- Check the LAN activity LED on the rear of the server. The LAN activity LED is lit when data is active on the Ethernet network. If the LAN activity LED is off, make sure that the hub and network are operating and that the correct device drivers are installed.
- Check for operating-system-specific causes of the problem.
- Make sure that the device drivers on the client and server are using the same protocol.

### Results

If the Ethernet controller still cannot connect to the network but the hardware appears to be working, the network administrator must investigate other possible causes of the error.

## Solving undetermined problems

If Dynamic System Analysis (DSA) did not diagnose the failure or if the server is inoperative, use the information in this section.

### About this task

If you suspect that a software problem is causing failures (continuous or intermittent), see "Software problems" on page 110.

Corrupted data in CMOS memory or corrupted UEFI firmware can cause undetermined problems. To reset the CMOS data, use the CMOS clear jumper (J11) to clear the CMOS memory and override the power-on password; see Table 1 on page 31 for more information. If you suspect that the UEFI firmware is corrupted, see "Recovering the server firmware (UEFI update failure)" on page 117.

If the power supplies are working correctly, complete the following steps:

### Procedure

1. Turn off the server.
2. Make sure that the server is cabled correctly.
3. Remove or disconnect the following devices, one at a time, until you find the failure. Turn on the server and reconfigure it each time.
   - Any external devices.
   - Surge-suppressor device (on the server).
   - Printer, mouse, and non-IBM devices.
   - Each adapter.
   - Hard disk drives.
   - Memory modules. The minimum configuration requirement is 4 GB DIMM in DIMM slot 1.
4. Turn on the server.

### Results

If the problem is solved when you remove an adapter from the server but the problem recurs when you reinstall the same adapter, suspect the adapter; if the problem recurs when you replace the adapter with a different one, suspect the riser card.

If you suspect a networking problem and the server passes all the system tests, suspect a network cabling problem that is external to the server.

## Problem determination tips

Because of the variety of hardware and software combinations that can encounter, use the following information to assist you in problem determination. If possible, have this information available when requesting assistance from IBM.

The model name and serial number are located on the ID label on the front of the server as shown in the following illustration.

**Note:** The illustrations in this document might differ slightly from your hardware.

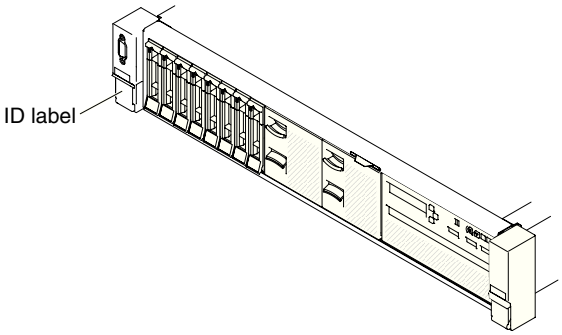


*Figure 45. ID label*

- Machine type and model
- Microprocessor or hard disk drive upgrades
- Failure symptom
  - Does the server fail the diagnostic tests?
  - What occurs? When? Where?
  - Does the failure occur on a single server or on multiple servers?
  - Is the failure repeatable?
  - Has this configuration ever worked?
  - What changes, if any, were made before the configuration failed?
  - Is this the original reported failure?
- Diagnostic program type and version level
- Hardware configuration (print screen of the system summary)
- UEFI firmware level
- IMM firmware level
- Operating system software

You can solve some problems by comparing the configuration and software setups between working and nonworking servers. When you compare servers to each other for diagnostic purposes, consider them identical only if all the following factors are exactly the same in all the servers:

- Machine type and model
- UEFI firmware level
- IMM firmware level
- Adapters and attachments, in the same locations
- Address jumpers, terminators, and cabling
- Software versions and levels

- Diagnostic program type and version level
- Configuration option settings
- Operating-system control-file setup

See Appendix D, “Getting help and technical assistance,” on page 973 for information about calling IBM for service.

## Recovering the server firmware (UEFI update failure)

Use this information to recover the server firmware.

**Important:** Some cluster solutions require specific code levels or coordinated code updates. If the device is part of a cluster solution, verify that the latest level of code is supported for the cluster solution before you update the code.

If the server firmware has become corrupted, such as from a power failure during an update, you can recover the server firmware in the following way:

- **In-band method:** Recover server firmware, using either the boot block jumper (Automated Boot Recovery) and a server Firmware Update Package Service Pack.
- **Out-of-band method:** Use the IMM web interface to update the firmware, using the latest server firmware update package.

**Note:** You can obtain a server update package from one of the following sources:

- Download the server firmware update from the World Wide Web.
- Contact your IBM service representative.

To download the server firmware update package from the World Wide Web, go to http://www.ibm.com/supportportal/.

The flash memory of the server consists of a primary bank and a back up bank. You must maintain a bootable UEFI firmware image in the back up bank. If the server firmware in the primary bank becomes corrupted, you can either manually boot the back up bank with the UEFI boot backup jumper (J15), or in the case of image corruption, this will occur automatically with the Automated Boot Recovery function.

### In-band manual recovery method

This section details the in-band manual recovery method.

#### About this task

To recover the server firmware and restore the server operation to the primary bank, complete the following steps:

#### Procedure

1. Read the safety information that begins on “Safety” on page vii and “Installation guidelines” on page 283.
2. Turn off the server, and disconnect all power cords and external cables.
3. Remove the cover (see “Removing the top cover” on page 146).
4. Locate the UEFI boot backup jumper (J15) on the system board.

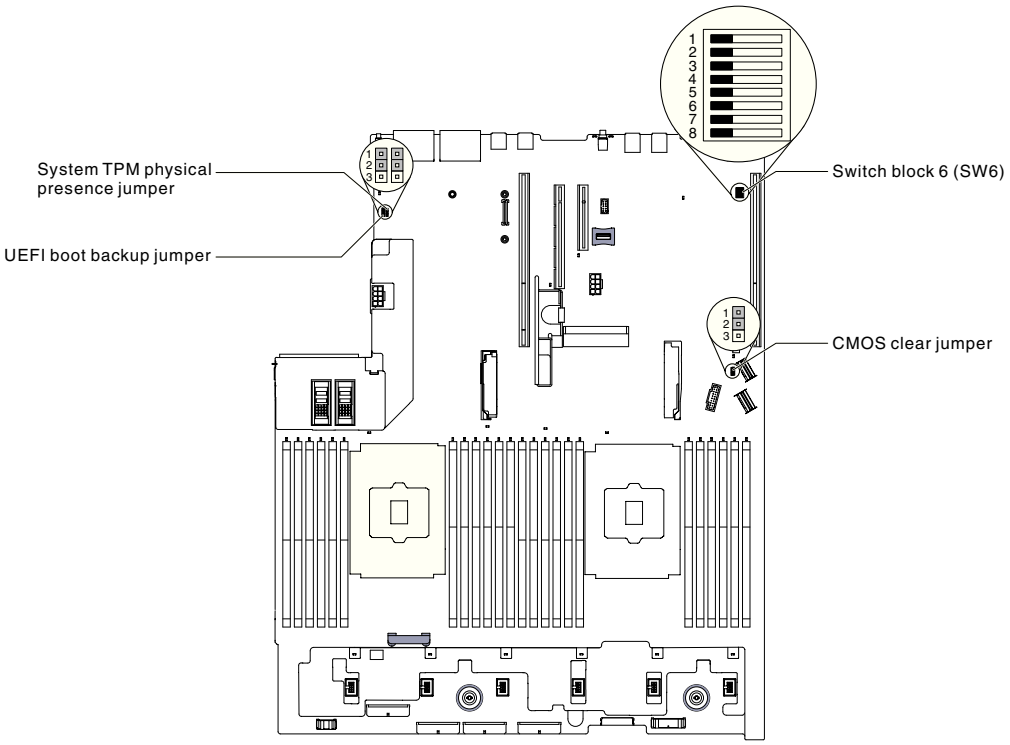


*Figure 46. UEFI boot backup jumper (J15) location*

5. Move the UEFI boot backup jumper (J15) from pins 1 and 2 to pins 2 and 3 to enable the UEFI recovery mode.
6. Reinstall the server cover; then, reconnect all power cords.
7. Restart the server. The system begins the power-on self-test (POST).
8. Boot the server to an operating system that is supported by the firmware update package that you downloaded.
9. Perform the firmware update by following the instructions that are in the firmware update package readme file.
10. Turn off the server and disconnect all power cords and external cables, and then remove the cover (see “Removing the top cover” on page 146).
11. Move the UEFI boot backup jumper (J15) from pins 2 and 3 back to the primary position (pins 1 and 2).
12. Reinstall the cover (see “Replacing the top cover” on page 147).
13. Reconnect the power cord and any cables that you removed.
14. Restart the server. The system begins the power-on self-test (POST). If this does not recover the primary bank, continue with the following steps.
15. Remove the top cover (see “Removing the top cover” on page 146).
16. Reset the CMOS by removing the system battery (see “Removing the system battery” on page 241).
17. Leave the system battery out of the server for approximately 5 to 15 minutes.
18. Reinstall the system battery (see “Replacing the system battery” on page 243).
19. Reinstall the top cover (see “Replacing the top cover” on page 147).
20. Reconnect the power cord and any cables that you removed.
21. Restart the server. The system begins the power-on self-test (POST).

22. If these recovery efforts fail, contact your IBM service representative for support.

### Results

## In-band automated boot recovery method

This section details the in-band automated boot recovery method.

### About this task

**Note:** Use this method if the BOARD LED on the light path diagnostics panel is lit and there is a log entry or `Booting Backup Image` is displayed on the firmware splash screen; otherwise, use the in-band manual recovery method.

### Procedure

1. Boot the server to an operating system that is supported by the firmware update package that you downloaded.
2. Perform the firmware update by following the instructions that are in the firmware update package readme file.
3. Restart the server.
4. At the firmware splash screen, press F3 when prompted to restore to the primary bank. The server boots from the primary bank.

### Results

## Out-of-band method

See the IMM2 documentation (*Integrated Management Module II User's Guide*) at http://www.ibm.com/support/entry/portal/docdisplay?lndocid=MIGR-5086346.

# Automated boot recovery (ABR)

Use this information for Automated boot recovery (ABR).

### About this task

While the server is starting, if the integrated management module II detects problems with the server firmware in the primary bank, the server automatically switches to the backup firmware bank and gives you the opportunity to recover the firmware in the primary bank. For instructions for recovering the UEFI firmware, see "Recovering the server firmware (UEFI update failure)" on page 117. After you have recovered the firmware in the primary bank, complete the following steps:

### Procedure

1. Restart the server.
2. When the prompt `Press F3 to restore to primary` is displayed, press F3 to start the server from the primary bank.

## Nx-boot failure

Use this information for Nx-boot failure.

Configuration changes, such as added devices or adapter firmware updates, and firmware or application code problems can cause the server to fail POST (the power-on self-test). If this occurs, the server responds in either of the following ways:

- The server restarts automatically and attempts POST again.
- The server hangs, and you must manually restart the server for the server to attempt POST again.

After a specified number of consecutive attempts (automatic or manual), the Nx-boot failure feature causes the server to revert to the default UEFI configuration and start the Setup utility so that you can make the necessary corrections to the configuration and restart the server. If the server is unable to successfully complete POST with the default configuration, there might be a problem with the system board.

To specify the number of consecutive restart attempts that will trigger the Nx-boot failure feature, in the Setup utility, click **System Settings** > **Recovery** > **POST Attempts** > **POST Attempts Limit**. The available options are 3, 6, 9, and 255 (disable Nx-boot failure).

# Chapter 4. Parts listing, System x3650 M5 Type 5462

The parts listing of System x3650 M5 Type 5462

The following replaceable components are available for the System x3650 M5 Type 5462 server, except as specified otherwise in "Replaceable server components." For an updated parts listing, go to http://www.ibm.com/supportportal/.

## Replaceable server components

The replaceable server components for System x3650 M5 Type 5462

Replaceable components consist of consumable parts, structural parts, and field replaceable units (FRUs):

- **Structural parts:** Purchase and replacement of structural parts (components, such as chassis assembly, top cover, and bezel) is your responsibility. If IBM acquires or installs a structural component at your request, you will be charged for the service. See "Structural parts" on page 128 for the list of structural parts.
- **Tier 1 customer replaceable unit (CRU):** Replacement of Tier 1 CRUs is your responsibility. If IBM installs a Tier 1 CRU at your request, you will be charged for the installation.
- **Tier 2 customer replaceable unit:** You may install a Tier 2 CRU yourself or request IBM to install it, at no additional charge, under the type of warranty service that is designated for your server.

For information about the terms of the warranty and getting service and assistance, see the *Warranty Information* document that comes with the server. For more information about getting service and assistance, see Appendix D, "Getting help and technical assistance," on page 973.

Visit http://www.ibm.com/systems/info/x86servers/serverproven/compat/us/ for the latest options supporting plan.

The following illustration shows the major components in the server. The illustrations in this document might differ slightly from your hardware. For a list of structural parts, see "Structural parts" on page 128.

© Copyright IBM Corp. 2014

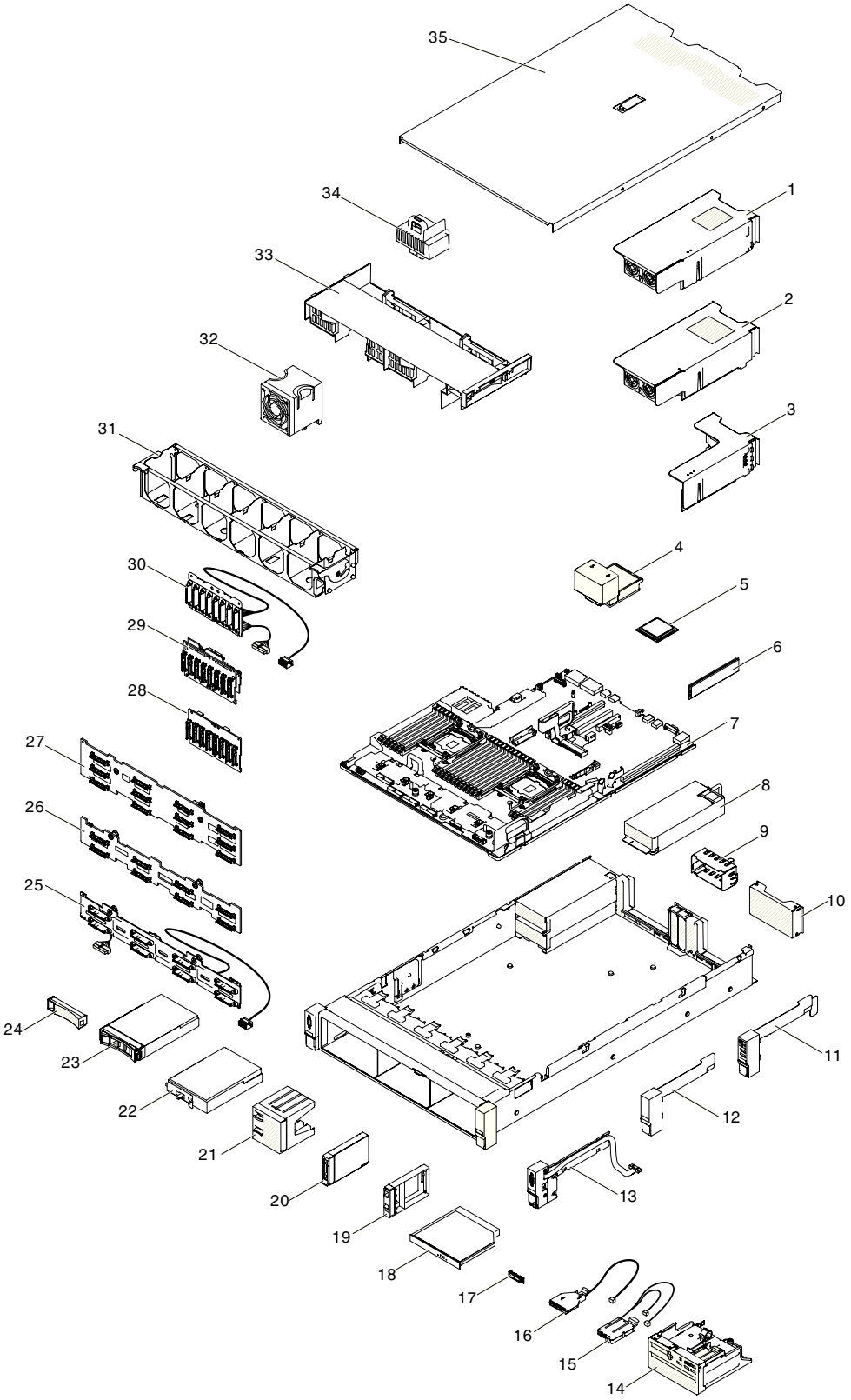


*Figure 47. Server components*

The following table lists the part numbers for the server replaceable components.

*Table 8. Parts listing, Type 5462*

| Index | Description | CRU part number (Tier 1) | CRU part number (Tier 2) |
|---|---|---|---|
| 1 | 2.5-inch rear two hard-disk-drive kit | 00AL953 | |
| 2 | 3.5-inch rear two hard-disk-drive kit | 00AL954 | |
| 3 | PCIe Riser (2 x8 PCIe + 1 x8 ML2 Slots) | 00FK630 | |
| 3 | PCIe Riser (1 x16 PCIe + 1 x8 ML2 Slots) | 00FK631 | |
| 3 | PCIe Riser (1 x16 PCIe + 1 x8 PCIe ) | 00FK628 | |
| 3 | PCIe Riser (3 x8 PCIe ) | 00FK629 | |
| 4 | Heat sink, value | | 00KA517 |
| 4 | Heat sink, performance | | 00KA518 |
| 5 | Microprocessor, Intel Xeon E5-2603 v3, 1.6 GHz, 15 MB, 1600 MHz, 85 W (6-core) | | 00KC788 |
| 5 | Microprocessor, Intel Xeon E5-2609 v3, 1.9 GHz, 15 MB, 1600 MHz, 85 W (6-core) | | 00AE692 |
| 5 | Microprocessor, Intel Xeon E5-2620 v3, 2.4 GHz, 15 MB, 1866 MHz, 85 W (6-core) | | 00AE690 |
| 5 | Microprocessor, Intel Xeon E5-2630 v3, 2.4 GHz, 20 MB, 1866 MHz, 85 W (8-core) | | 00AE689 |
| 5 | Microprocessor, Intel Xeon E5-2630L v3, 1.8 GHz, 20 MB, 1866 MHz, 55 W (8-core) | | 00AE691 |
| 5 | Microprocessor, Intel Xeon E5-2640 v3, 2.6 GHz, 20 MB, 1866 MHz, 90 W (8-core) | | 00AE688 |
| 5 | Microprocessor, Intel Xeon E5-2650 v3, 2.3 GHz, 25 MB, 2133 MHz, 105 W (10-core) | | 00AE686 |
| 5 | Microprocessor, Intel Xeon E5-2699 v3, 2.3 GHz, 45 MB, 2133 MHz, 145 W (18-core) | | 00KC789 |
| 5 | Microprocessor, Intel Xeon E5-2670 v3, 2.3 GHz, 30 MB, 2133 MHz, 120 W (12-core) | | 00AE684 |
| 5 | Microprocessor, Intel Xeon E5-2680 v3, 2.5 GHz, 30 MB, 2133 MHz, 120 W (12-core) | | 00AE683 |
| 5 | Microprocessor, Intel Xeon E5-2690 v3, 2.6 GHz, 30 MB, 2133 MHz, 135 W (12-core) | | 00AE682 |
| 6 | Memory, 4 GB single-rank 1.2 V, DDR4, 2133MHz, RDIMM | 46W0786 | |
| 6 | Memory, 8 GB single-rank 1.2 V, DDR4, 2133MHz, RDIMM | 46W0790 | |
| 6 | Memory, 8 GB dual-rank 1.2 V, DDR4, 2133MHz, RDIMM | 46W0794 | |
| 6 | Memory, 16 GB dual-rank 1.2 V, DDR4, 2133MHz, RDIMM | 46W0798 | |
| 6 | Memory, 32 GB quad-rank 1.2 V, DDR4, 2133MHz, LRDIMM | 46W0802 | |
| 6 | Memory, 4GB single-rank 1.5 V, DDR3, NVDIMM | 00KA733 | |
| 7 | System board | | 00FK639 |
| 8 | 550W High Efficiency Platinum AC Power Supply | 94Y8137 | |
| 8 | 750W High Efficiency Platinum AC Power Supply | 94Y8144 | |
| 8 | 750W High Efficiency Titanium AC Power Supply | 94Y8150 | |
| 8 | 900W High Efficiency Platinum AC Power Supply | 94Y8148 | |
| 9 | Power supply filler panel | 94Y7610 | |

*Table 8. Parts listing, Type 5462 (continued)*

| Index | Description | CRU part number (Tier 1) | CRU part number (Tier 2) |
|---|---|---|---|
| 10 | Riser cage filler | 00AL950 | |
| 11 | Right functional EIA assembly | 00FK801 | |
| 12 | Right EIA assembly | 00KF411 | |
| 13 | Left video EIA assembly | 00FK805 | |
| 14 | Media cage | 00AL949 | |
| 15 | Operator information panel assembly | 00KF492 | |
| 16 | Front USB assembly | 00FK837 | |
| 17 | LCD system information display panel | 00D0464 | |
| 18 | UltraSlim enhanced SATA DVD-ROM | 00FL352 | |
| 19 | 2.5-inch filler panel | 00FW856 | |
| 20 | Hard disk drive, 2.5-inch hot-swap, 300 GB, SAS, 10 K | 00AJ097 | |
| 20 | Hard disk drive, 2.5-inch hot-swap, 300 GB, SAS, 15 K | 00AJ082 | |
| 20 | Hard disk drive, 2.5-inch hot-swap, 500 GB, SAS, 7.2 K | 00AJ122 | |
| 20 | Hard disk drive, 2.5-inch hot-swap, 500 GB, SATA, 7.2 K | 00AJ137 | |
| 20 | Hard disk drive, 2.5-inch hot-swap, 600 GB, SAS, 10 K | 00AJ092 | |
| 20 | Hard disk drive, 2.5-inch hot-swap, 600 GB, SAS, 15 K | 00AJ127 | |
| 20 | Hard disk drive, 2.5-inch hot-swap, 900 GB, SAS, 10 K | 00AJ072 | |
| 20 | Hard disk drive, 2.5-inch hot-swap, 1 TB, SAS, 7.2 K | 00AJ087 | |
| 20 | Hard disk drive, 2.5-inch hot-swap, 1 TB, SATA, 7.2 K | 00AJ142 | |
| 20 | Hard disk drive, 2.5-inch hot-swap, 1.2 TB, SAS, 10 K | 46W6819 | |
| 20 | Solid state drive, 2.5-inch hot-swap, SATA, 480 GB | 00AJ406 | |
| 20 | Solid state drive, 2.5-inch hot-swap, SAS, 800 GB | 00AJ218 | |
| 20 | Solid state drive, 2.5-inch hot-swap, SATA, 960 GB | 00FN348 | |
| 20 | Solid state drive, 2.5-inch hot-swap, SAS, 1.6 TB | 00AJ223 | |
| 21 | 2.5-inch 4-drive filler panel | 00KF417 | |
| 22 | Hard disk drive, 3.5-inch simple-swap, 2 TB, SATA, 7.2 K | 00FN119 | |
| 22 | Hard disk drive, 3.5-inch simple-swap, 3 TB, SATA, 7.2 K | 00FN134 | |
| 22 | Hard disk drive, 3.5-inch simple-swap, 4 TB, SATA, 7.2 K | 00FN149 | |
| 22 | Hard disk drive, 3.5-inch simple-swap, 5 TB, SATA, 7.2 K | 00FN164 | |
| 22 | Hard disk drive, 3.5-inch simple-swap, 6 TB, SATA, 7.2 K | 00FN179 | |
| 23 | Hard disk drive, 3.5-inch hot-swap, 2 TB, SATA, 7.2 K | 00FN114 | |
| 23 | Hard disk drive, 3.5-inch hot-swap, 3 TB, SATA, 7.2 K | 00FN129 | |
| 23 | Hard disk drive, 3.5-inch hot-swap, 4 TB, SATA, 7.2 K | 00FN144 | |
| 23 | Hard disk drive, 3.5-inch hot-swap, 5 TB, SATA, 7.2 K | 00FN159 | |
| 23 | Hard disk drive, 3.5-inch hot-swap, 6 TB, SATA, 7.2 K | 00FN174 | |
| 23 | Hard disk drive, 3.5-inch hot-swap, 2 TB, SAS, 7.2 K | 00FN189 | |
| 23 | Hard disk drive, 3.5-inch hot-swap, 4 TB, SAS, 7.2 K | 00FN209 | |
| 23 | Hard disk drive, 3.5-inch hot-swap, 6 TB, SAS, 7.2 K | 00FN229 | |
| 23 | Self-Encrypting drive, 3.5-inch hot-swap, 2 TB, SAS, 7.2 K | 00FN239 | |

*Table 8. Parts listing, Type 5462 (continued)*

| Index | Description | CRU part number (Tier 1) | CRU part number (Tier 2) |
|---|---|---|---|
| 23 | Self-Encrypting drive, 3.5-inch hot-swap, 4 TB, SAS, 7.2 K | 00FN249 | |
| 23 | Self-Encrypting drive, 3.5-inch hot-swap, 6 TB, SAS, 7.2 K | 00FN259 | |
| 24 | 3.5-inch filler panel | 69Y5364 | |
| 25 | 3.5-inch HDD simple-swap backplate (non-RAID) | 00FK851 | |
| 25 | 3.5-inch HDD simple-swap backplate (RAID) | 00KA479 | |
| 26 | 3.5-inch HDD hot-swap backplane with 8 HDDs | 00FJ751 | |
| 27 | 3.5-inch HDD hot-swap backplane with 12 HDDs | 00FJ754 | |
| 28 | 2.5-inch HDD hot-swap backplane | 00FJ756 | |
| 29 | 2.5-inch HDD hot-swap backplane (expander) | 00AG941 | |
| 30 | 2.5-inch HDD simple-swap backplate (non-RAID) | 00FK807 | |
| 30 | 2.5-inch HDD simple-swap backplate (RAID) | 00KA477 | |
| 31 | Fan cage | 00KF410 | |
| 32 | Fan | 00KA516 | |
| 33 | Air baffle | 00KF406 | |
| 34 | Power paddle module | 00FK636 | |
| | 3.5-inch simple-swap filler | 69Y5368 | |
| | Media cage filler | 00KF416 | |
| | Blank fan filler | 00KF418 | |
| | Brocade 8Gb FC single-port HBA | 46M6061 | |
| | Brocade 8Gb FC dual-port HBA | 46M6062 | |
| | Brocade 16Gb FC Single-port HBA | 81Y1671 | |
| | Brocade 16Gb FC Dual-port HBA | 81Y1678 | |
| | Emulex 8Gb FC single-port HBA | 42D0491 | |
| | Emulex 8Gb FC dual-port HBA ⌂ | 42D0500 | |
| | Emulex 16Gb FC single-port HBA | 00D8546 | |
| | Emulex 16Gb FC dual-port HBA | 00D8548 | |
| | N2215 SAS/SATA HBA | 47C8676 | |
| | N2225 SAS/SATA HBA | 00AE914 | |
| | N2226 SAS/SATA HBA | 00AE918 | |
| | M5225 SAS/SATA controller | 00AE939 | |
| | ServeRAID M5210 SAS/SATA controller | 46C9111 | |
| | ServeRAID M1215 SAS/SATA controller | 46C9115 | |
| | QLogic 8Gb FC single-port HBA | 00Y5628 | |
| | QLogic 8Gb FC dual-port HBA | 00Y5629 | |
| | QLogic 16Gb FC single-port HBA | 00Y3340 | |
| | QLogic 16Gb FC dual-port HBA | 00Y3344 | |
| | Broadcom NetXtreme I Quad Port GbE Adapter | 90Y9355 | |
| | Broadcom NetXtreme I Dual Port GbE Adapter | 90Y9373 | |
| | Broadcom NetXtreme Dual Port 10GbE SFP+ Adapter | 94Y5182 | |

*Table 8. Parts listing, Type 5462 (continued)*

| Index | Description | CRU part number (Tier 1) | CRU part number (Tier 2) |
|---|---|---|---|
| | Broadcom NetXtreme II ML2 Dual Port 10GbE SFP+ | 94Y5231 | |
| | Broadcom NetXtreme II ML2 Dual Port 10GbaseT | 94Y5233 | |
| | Emulex VFA5 ML2 Dual Port 10GbE SFP+ Adapter | 00AD918 | |
| | Intel Ethernet Dual Port Server Adapter I350-T2 | 00AG512 | |
| | Intel Ethernet Quad Port Server Adapter I350-T4 | 00AG522 | |
| | Intel I350-T4 ML2 Quad Port GbE Adapter | 47C8210 | |
| | Intel x520 Dual Port 10GbE SFP+ Adapte | 49Y7962 | |
| | Intel X540 ML2 Dual Port 10GbaseT Adapter | 47C8152 | |
| | External RDX Power Adapter | 81Y8905 | |
| | Mellanox ConnectX-3 40GbE / FDR IB VPI Adapter | 00D9552 | |
| | Mellanox ConnectX-3 10 GbE Adapter | 00D9692 | |
| | Broadcom NetXtreme 2x10GbE BaseT Adapter | 00E2714 | |
| | Brocade 10Gb SFP+ SR optical transceiver | 46C9297 | |
| | Qlogic 10Gb SFP+ SR optical transceiver | 42C1816 | |
| | BNT SFP+ transceiver module assembly | 46C3449 | |
| | ServeRAID M5200 Series 1GB Cache/RAID 5 Upgrade | 47C8657 | |
| | ServeRAID M5200 Series 1GB Flash/RAID 5 Upgrade | 47C8661 | |
| | ServeRAID M5200 Series 2GB Flash/RAID 5 Upgrade | 47C8665 | |
| | ServeRAID M5200 Series 4GB Flash/RAID 5 Upgrade | 47C8669 | |
| | Qlogic 8200 Dual Port 10GbE SFP+ VFA | 90Y4605 | |
| | Cable, UMIQ-V2 | 00AK143 | |
| | Cable, COM PORT | 00KC965 | |
| | Cable, FPC - PLANAR | | 00FK803 |
| | Cable, SATA DVD 90 mm | 00FK809 | |
| | Cable, SATA DVD 380 mm | 00FK853 | |
| | Cable, SAS HD 150 mm (Label 1) | 00KF717 | |
| | Cable, SAS HD 250 mm (Label 1) | 00KF719 | |
| | Cable, SAS HD 350 mm (Label 0) | 00KF704 | |
| | Cable, SAS HD 250 mm (Label 0) | 00FK817 | |
| | Cable, SAS HD 550 mm (Label 0) | 00FK811 | |
| | Cable, SAS HD 750 mm (Label 0) | 00FK813 | |
| | Cable, SAS HD 450/450 mm | 00FK845 | |
| | Cable, SAS HD 590/580 mm | 00FK843 | |
| | Cable, SAS HD 635/525 mm | 00FK839 | |
| | Cable, SAS HD 835/770 mm | 00FK841 | |
| | Cable, SAS HD 950/905 mm | 00FK847 | |
| | Cable, SAS HD 950/905 mm | 00FK849 | |
| | Cable, 0.6M HD SAS to mSAS | 00D2142 | |
| | Cable, 1.5M HD SAS to mSAS | 00D2144 | |

*Table 8. Parts listing, Type 5462 (continued)*

| Index | Description | CRU part number (Tier 1) | CRU part number (Tier 2) |
|---|---|---|---|
| | Cable, 3.0M HD SAS to mSAS | 00D2148 | |
| | Cable, 6.0M HD SAS to mSAS | 44X3322 | |
| | Cable, front HDD 80 mm | 00KC582 | |
| | Cable, front HDD 150 mm | 00FK819 | |
| | Cable, front HDD 230 mm | 00FK825 | |
| | Cable, front HDD 260 mm | 00KF464 | |
| | Cable, 3.5-inch front HDD | 00KA541 | |
| | Cable, GPU power converter, 240 mm | 00FK827 | |
| | Cable, GPU power converter, 240 mm | 00FK829 | |
| | Cable, GPU power converter, 6P/8P 240 mm | 00FK831 | |
| | Cable, USB conversion | 39M2909 | |
| | Cable, SAS Y cable | 49Y9901 | |
| | Cable, internal SAS Y cable | 44E8878 | |
| | Cable, external USB, 3M | 44E8891 | |
| | Cable, external USB 3.0, 3M | 46C2598 | |
| | Cable, internal USB, 1M | 44E8893 | |
| | Cable, 1ft USB for USB kit | 44E8894 | |
| | Cable, super cap for ServRAID M5200 series flash | 46C9793 | |
| | Cable, USB CRUs | 46M6475 | |
| | Cable, USB CRUs | 46M6477 | |
| | Cable, internal USB FRU | 81Y3643 | |
| | Line cord, 2.8M | 39M5377 | |
| | Line cord, 2.8M | 39M5509 | |
| | Power cord | 00JY023 | |
| | Keyboard US/ENG. | 00FL300 | |
| | UltraSlim enhanced SATA multi-burner | 00FL353 | |
| | Adapter assembly | 43W8496 | |
| | 32GB Enterprise Value USB Memory Key | 00ML201 | |
| | 3.0 VOLT battery | 33F8354 | |
| | LTO ultrium universal cleaning cartridge | 35L2086 | |
| | Half-high LTO generation 6 SAS tape drive | 35P1049 | |
| | External Half-high LTO generation 5 SAS tape drive | 49Y9907 | |
| | Thermal grease | | 41Y9292 |
| | USB backplate | 44E8877 | |
| | RDX 320GB Internal USB drive | 46C2346 | |
| | External RDX USB 3.0 drive dock | 46C2347 | |
| | 320GB cartridge | 46C5394 | |
| | 500GB cartridge | 46C5395 | |
| | NVIDIA Grid K1 (Actively Cooled) | 90Y2432 | |

*Table 8. Parts listing, Type 5462 (continued)*

| Index | Description | CRU part number (Tier 1) | CRU part number (Tier 2) |
|---|---|---|---|
| | NVIDIA Grid K2 (Actively Cooled) | 90Y2395 | |
| | NVIDIA Tesla K40c | 90Y2408 | |
| | Security bezel | 00FK615 | |
| | MISC KIT | 00KF419 | |
| | Slide kit | 00KA592 | |
| | Cable management arm (CMA) | 00KA594 | |
| | Label, chassis | 00KF412 | |
| | Labels, system service and FRU/CRU (2.5-inch) | 00KF413 | |
| | Labels, system service and FRU/CRU (3.5-inch) | 00KF414 | |
| | Microprocessor installation tool | 00AE535 | |
| | Universal slides kit | 00KA593 | |
| | Alcohol wipes | | 59P4739 |

## Structural parts

Structural parts are not covered by the IBM Statement of Limited Warranty. You can place an order on the structural parts from the IBM retail store.

The following structural parts are available for purchase from the retail store.

*Table 9. Structural parts, Type 5462*

| Index | Description | Part number |
|---|---|---|
| | Chassis, 2.5-inch HDD model | 00KF407 |
| | Chassis, 3.5-inch 8 HDD model | 00KF408 |
| | Chassis, 3.5-inch 12 HDD model | 00KF409 |
| 35 | Top cover (2.5-inch model and 3.5-inch 8 HDD model) | 00KF404 |
| 35 | Top cover (3.5-inch 12 HDD model) | 00KF405 |

To order a structural part, complete the following steps:

**Note:** Changes are made periodically to the IBM website. The actual procedure might vary slightly from what is described in this document.

1. Go to http://www.ibm.com.
2. From the **Products** menu, select **Upgrades, accessories & parts**.
3. Click **Obtain maintenance parts**; then, follow the instructions to order the part from the retail store.

If you need help with your order, call the toll-free number that is listed on the retail parts page, or contact your local IBM representative for assistance.

## Power cords

For your safety, a power cord with a grounded attachment plug is provided to use with this product. To avoid electrical shock, always use the power cord and plug with a properly grounded outlet.

IBM power cords used in the United States and Canada are listed by Underwriter's Laboratories (UL) and certified by the Canadian Standards Association (CSA).

For units intended to be operated at 115 volts: Use a UL-listed and CSA-certified cord set consisting of a minimum 18 AWG, Type SVT or SJT, three-conductor cord, a maximum of 15 feet in length and a parallel blade, grounding-type attachment plug rated 15 amperes, 125 volts.

For units intended to be operated at 230 volts (U.S. use): Use a UL-listed and CSA-certified cord set consisting of a minimum 18 AWG, Type SVT or SJT, three-conductor cord, a maximum of 15 feet in length and a tandem blade, grounding-type attachment plug rated 15 amperes, 250 volts.

For units intended to be operated at 230 volts (outside the U.S.): Use a cord set with a grounding-type attachment plug. The cord set should have the appropriate safety approvals for the country in which the equipment will be installed.

Power cords for a specific country or region are usually available only in that country or region.

| **Power cord part number** | **Used in these countries and regions** |
|---|---|
| 39M5206 | China |
| 39M5102 | Australia, Fiji, Kiribati, Nauru, New Zealand, Papua New Guinea |
| 39M5123 | Afghanistan, Albania, Algeria, Andorra, Angola, Armenia, Austria, Azerbaijan, Belarus, Belgium, Benin, Bosnia and Herzegovina, Bulgaria, Burkina Faso, Burundi, Cambodia, Cameroon, Cape Verde, Central African Republic, Chad, Comoros, Congo (Democratic Republic of), Congo (Republic of), Cote D'Ivoire (Ivory Coast), Croatia (Republic of), Czech Republic, Dahomey, Djibouti, Egypt, Equatorial Guinea, Eritrea, Estonia, Ethiopia, Finland, France, French Guyana, French Polynesia, Germany, Greece, Guadeloupe, Guinea, Guinea Bissau, Hungary, Iceland, Indonesia, Iran, Kazakhstan, Kyrgyzstan, Laos (People's Democratic Republic of), Latvia, Lebanon, Lithuania, Luxembourg, Macedonia (former Yugoslav Republic of), Madagascar, Mali, Martinique, Mauritania, Mauritius, Mayotte, Moldova (Republic of), Monaco, Mongolia, Morocco, Mozambique, Netherlands, New Caledonia, Niger, Norway, Poland, Portugal, Reunion, Romania, Russian Federation, Rwanda, Sao Tome and Principe, Saudi Arabia, Senegal, Serbia, Slovakia, Slovenia (Republic of), Somalia, Spain, Suriname, Sweden, Syrian Arab Republic, Tajikistan, Tahiti, Togo, Tunisia, Turkey, Turkmenistan, Ukraine, Upper Volta, Uzbekistan, Vanuatu, Vietnam, Wallis and Futuna, Yugoslavia (Federal Republic of), Zaire |
| 39M5130 | Denmark |
| 39M5144 | Bangladesh, Lesotho, Macao, Maldives, Namibia, Nepal, Pakistan, Samoa, South Africa, Sri Lanka, Swaziland, Uganda |

| Power cord part number | Used in these countries and regions |
|---|---|
| 39M5151 | Abu Dhabi, Bahrain, Botswana, Brunei Darussalam, Channel Islands, China (Hong Kong S.A.R.), Cyprus, Dominica, Gambia, Ghana, Grenada, Iraq, Ireland, Jordan, Kenya, Kuwait, Liberia, Malawi, Malaysia, Malta, Myanmar (Burma), Nigeria, Oman, Polynesia, Qatar, Saint Kitts and Nevis, Saint Lucia, Saint Vincent and the Grenadines, Seychelles, Sierra Leone, Singapore, Sudan, Tanzania (United Republic of), Trinidad and Tobago, United Arab Emirates (Dubai), United Kingdom, Yemen, Zambia, Zimbabwe |
| 39M5158 | Liechtenstein, Switzerland |
| 39M5165 | Chile, Italy, Libyan Arab Jamahiriya |
| 39M5172 | Israel |
| 39M5095 | 220 - 240 V<br><br>Antigua and Barbuda, Aruba, Bahamas, Barbados, Belize, Bermuda, Bolivia, Caicos Islands, Canada, Cayman Islands, Colombia, Costa Rica, Cuba, Dominican Republic, Ecuador, El Salvador, Guam, Guatemala, Haiti, Honduras, Jamaica, Mexico, Micronesia (Federal States of), Netherlands Antilles, Nicaragua, Panama, Peru, Philippines, Saudi Arabia, Thailand, Taiwan, United States of America, Venezuela |
| 39M5081 | 110 - 120 V<br><br>Antigua and Barbuda, Aruba, Bahamas, Barbados, Belize, Bermuda, Bolivia, Caicos Islands, Canada, Cayman Islands, Colombia, Costa Rica, Cuba, Dominican Republic, Ecuador, El Salvador, Guam, Guatemala, Haiti, Honduras, Jamaica, Mexico, Micronesia (Federal States of), Netherlands Antilles, Nicaragua, Panama, Peru, Philippines, Saudi Arabia, Thailand, Taiwan, United States of America, Venezuela |
| 39M5219 | Korea (Democratic People's Republic of), Korea (Republic of) |
| 39M5199 | Japan |
| 39M5068 | Argentina, Paraguay, Uruguay |
| 39M5226 | India |
| 39M5240 | Brazil |

# Chapter 5. Removing and replacing components

Use this information to remove and replace the server components.

The types of replaceable components are:

- **Structural parts:** Purchase and replacement of structural parts (components, such as chassis assembly, top cover, and bezel) is your responsibility. If IBM acquires or installs a structural component at your request, you will be charged for the service.
- **Tier 1 customer replaceable unit (CRU):** Replacement of Tier 1 CRUs is your responsibility. If IBM installs a Tier 1 CRU at your request, you will be charged for the installation.
- **Tier 2 customer replaceable unit:** You may install a Tier 2 CRU yourself or request IBM to install it, at no additional charge, under the type of warranty service that is designated for your server.

See Chapter 4, "Parts listing, System x3650 M5 Type 5462," on page 121 to determine whether a component is a structural part, Tier 1 CRU, or Tier 2 CRU.

For information about the terms of the warranty, see the *Warranty Information* document that comes with the server.

For more information about getting service and assistance, see Appendix D, "Getting help and technical assistance," on page 973.

## Returning a device or component

If you are instructed to return a device or component, follow all packaging instructions, and use any packaging materials for shipping that are supplied to you.

## Internal cable routing and connectors

This section provides information about routing the cables when you install some components in the server.

**Note:** Disengage all latches, release tabs or locks on cable connectors when you disconnect all cables from the system board. Failing to release them before removing the cables will damage the cable sockets on the system board. The cable sockets on the system board are fragile. Any damage to the cable sockets may require replacing the system board.

© Copyright IBM Corp. 2014

# General cable routing connections

## Cabling VGA power connector

The internal routing and connectors for the front USB and video cables.

The following illustration shows the internal routing and connectors for the video graphic adapter (VGA) power cables:

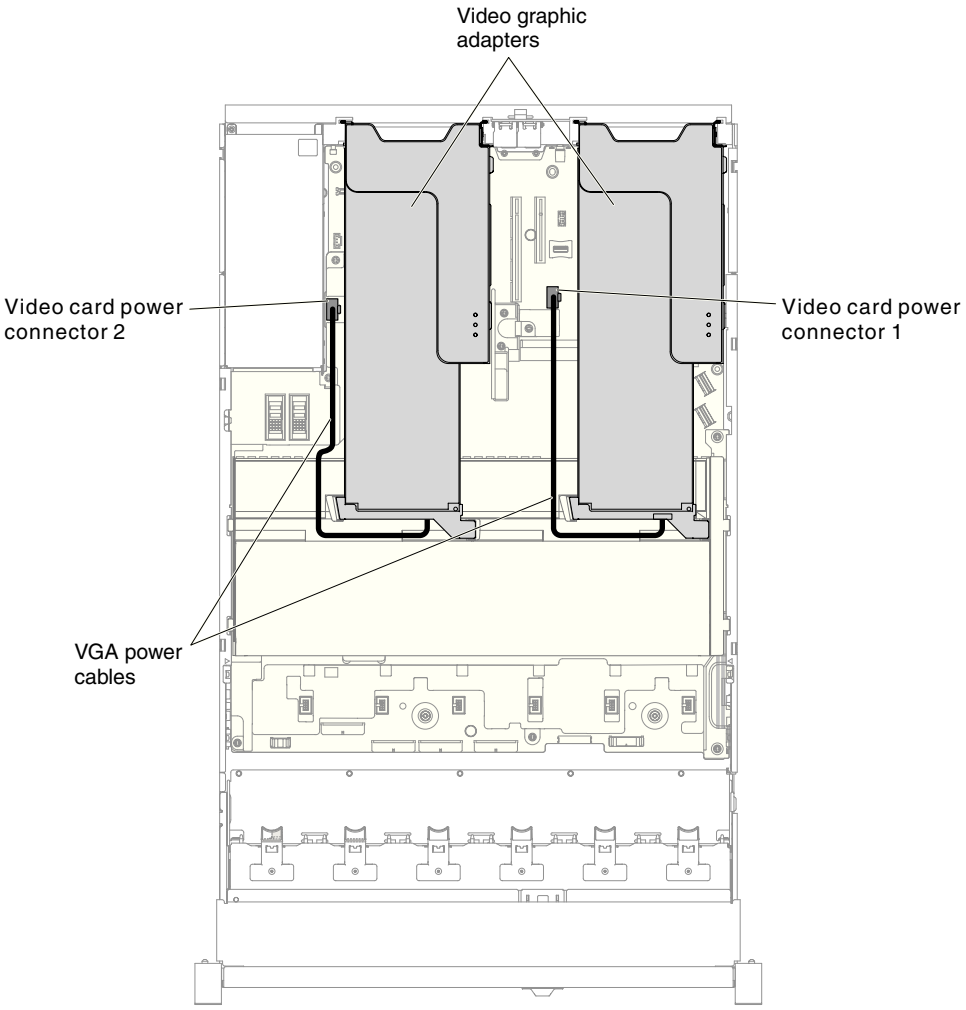


*Figure 48. VGA power cables connection*

## 2.5-inch hard disk drive cable connection

The following illustrations show the cabling information for the 2.5-inch drive models.

**Important:** Make sure all SAS cables are routed lower than the DIMM latches.

### 8x2.5-inch drive model

The internal routing for the 8x2.5-inch drive model cables.

The following illustration shows the internal routing for the 8x2.5-inch drive model cables.

#### 8x2.5-inch simple-swap hard disk drive model

- 8x2.5-inch simple-swap hard disk drive with hardware RAID

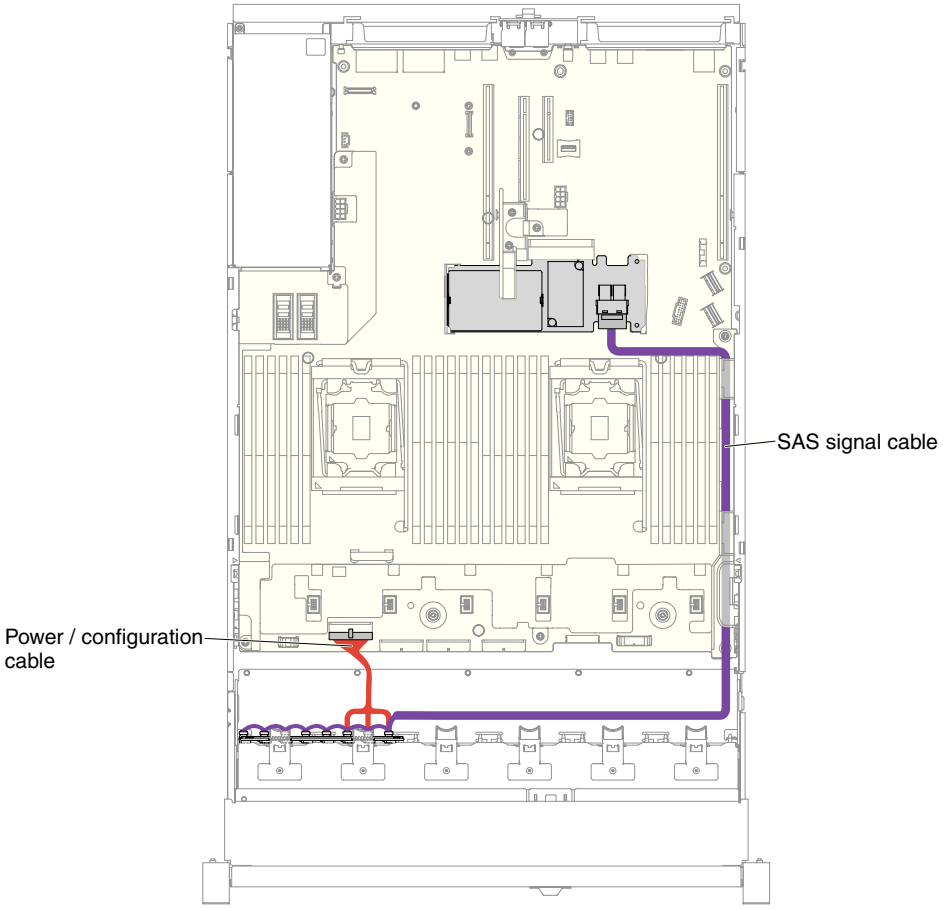


*Figure 49. 8x2.5-inch simple-swap hard disk drive with hardware RAID cabling*

- 8x2.5-inch simple-swap hard disk drive with software RAID

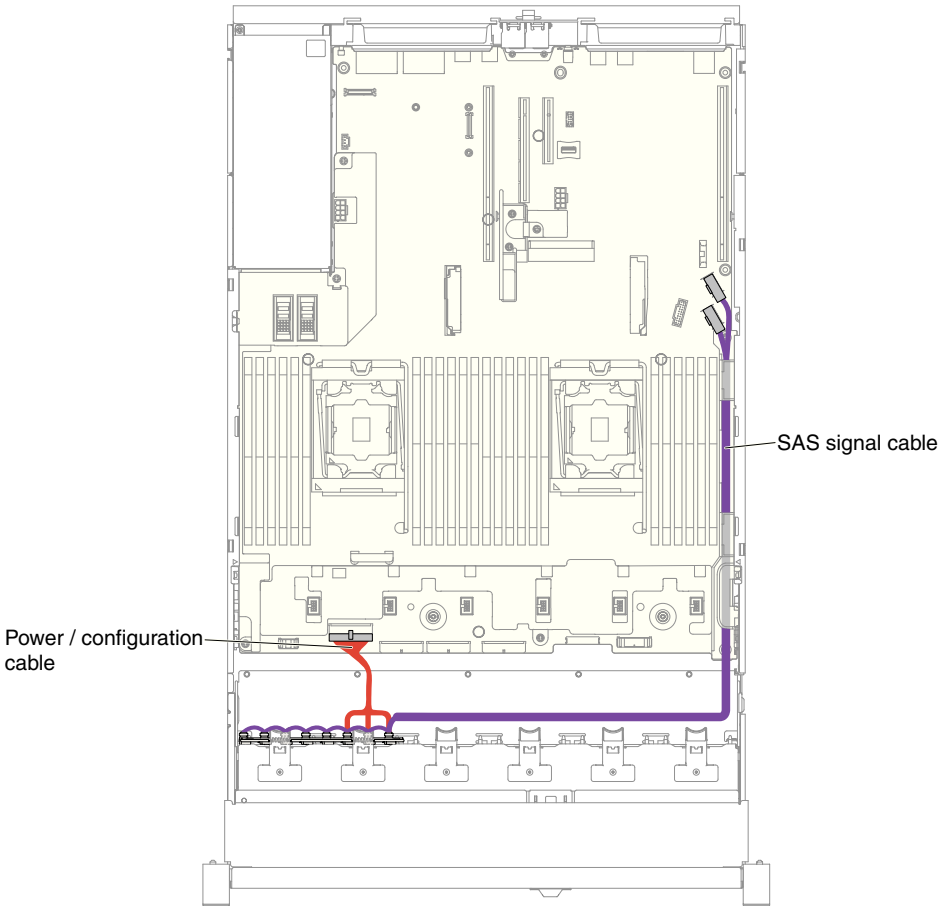


*Figure 50. 8x2.5-inch simple-swap hard disk drive with software RAID cabling*

## 8x2.5-inch hot-swap hard disk drive model

- 8x2.5-inch hot-swap hard disk drive

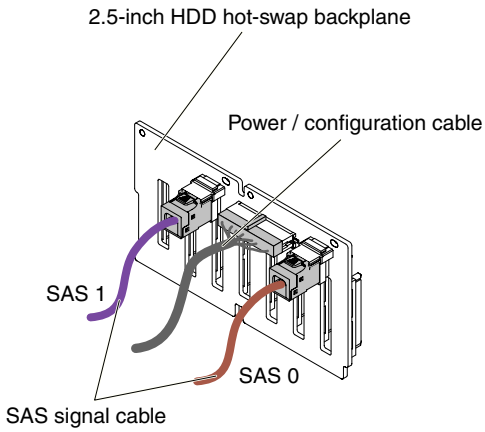


*Figure 51. Cable connection*

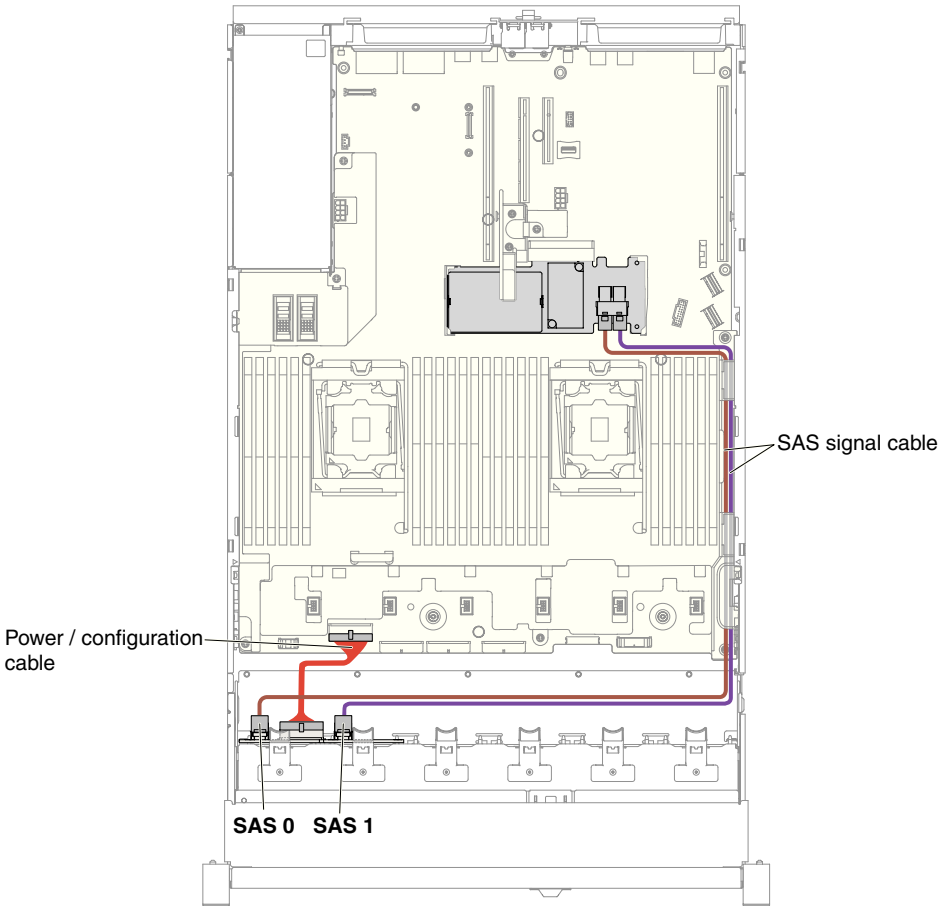


*Figure 52. 8x2.5-inch hot-swap hard disk drive cabling*

## 16x2.5-inch drive model

The internal routing for the 16x2.5-inch drive model cables.

The following illustration shows the internal routing for the 16x2.5-inch drive model cables.

### 16x2.5-inch simple-swap hard disk drive model

- 16x2.5-inch simple-swap hard disk drive with hardware RAID

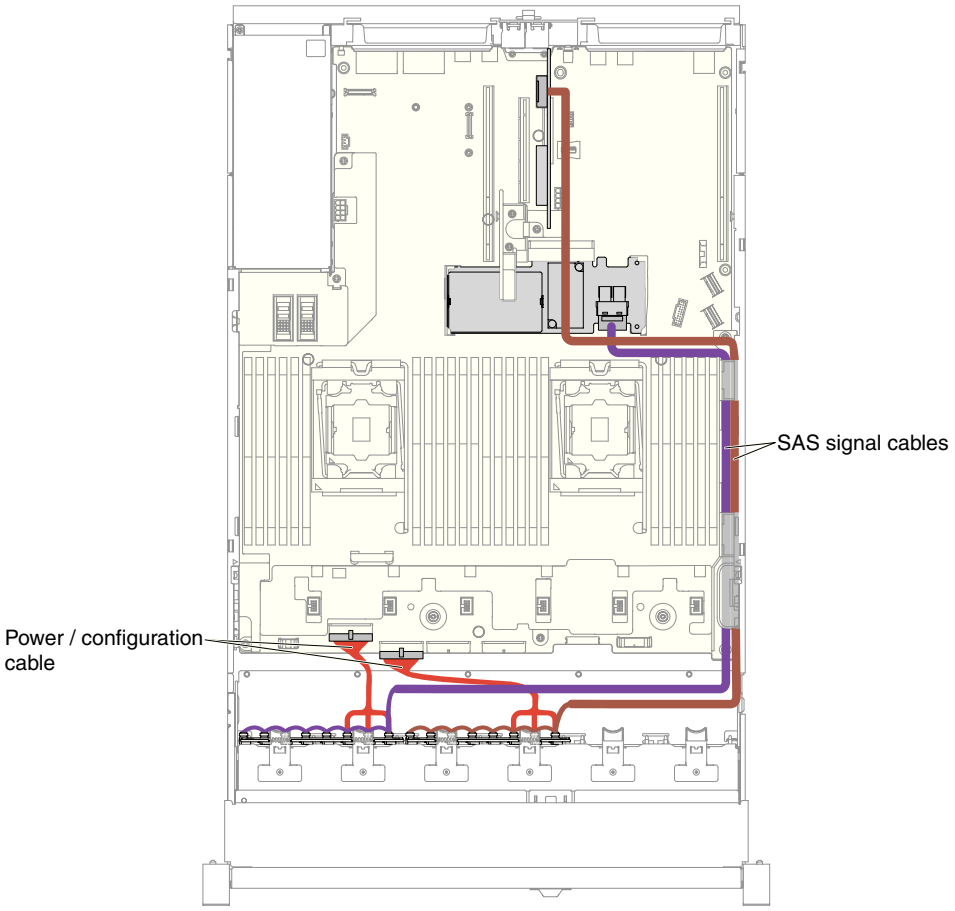


*Figure 53. 16x2.5-inch simple-swap hard disk drive with hardware RAID cabling*

## 16x2.5-inch hot-swap hard disk drive model

- 16x2.5-inch hot-swap hard disk drive with 2 identical backplanes

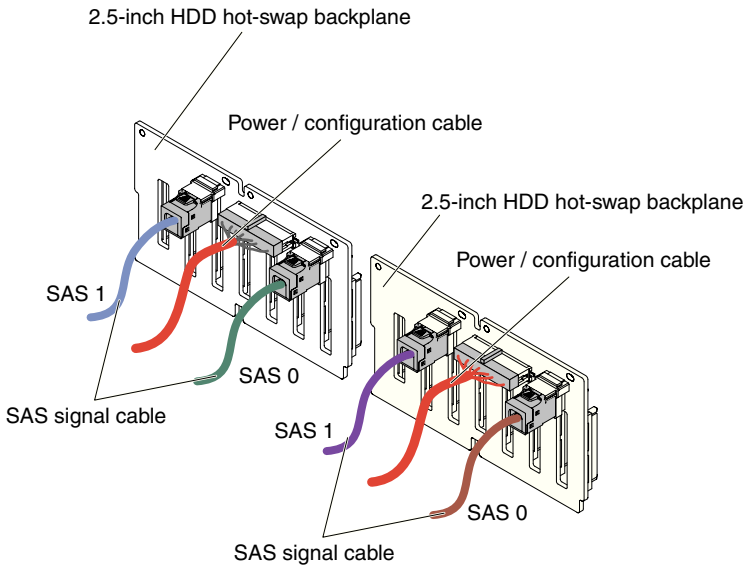


*Figure 54. 16x2.5-inch hot-swap hard disk drive cabling*

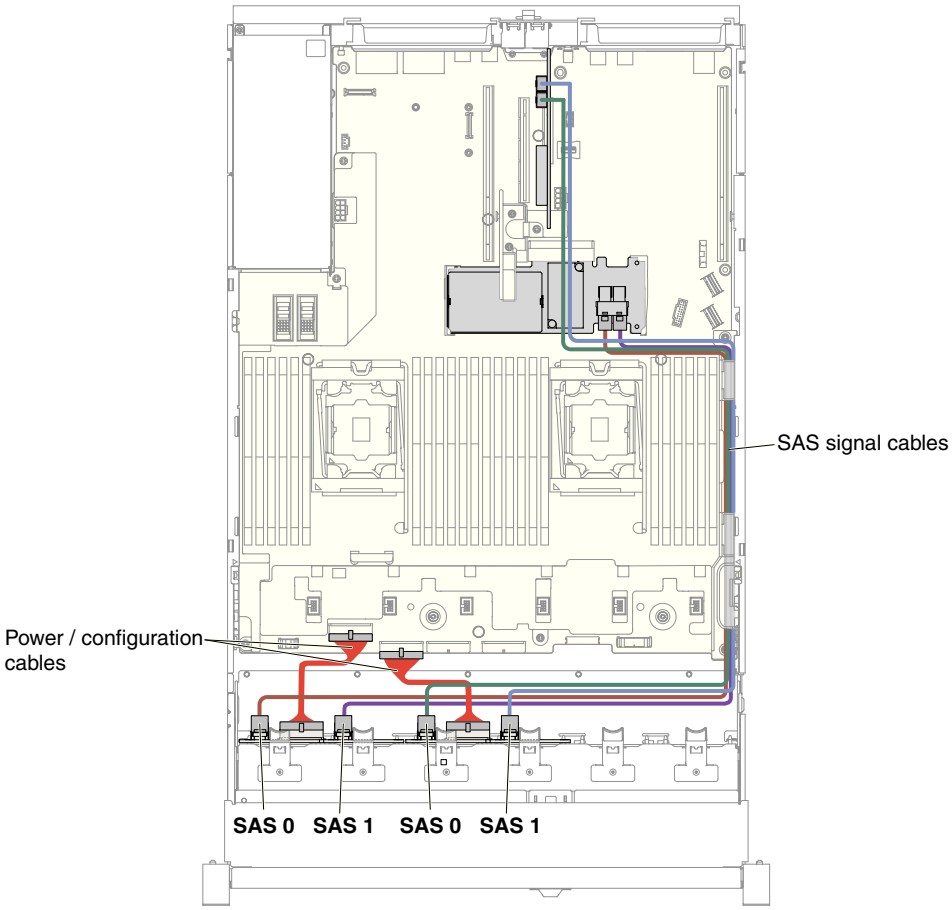


*Figure 55. 16x2.5-inch hot-swap hard disk drive cabling*

- 16x2.5-inch hot-swap hard disk drive with one expander

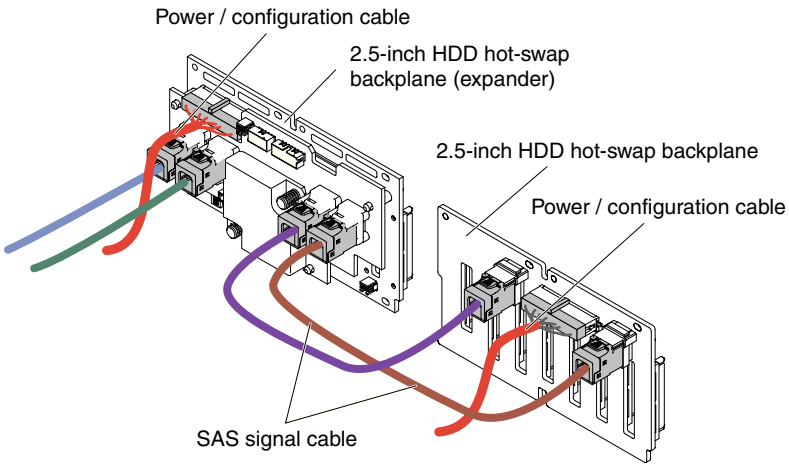


*Figure 56. 16x2.5-inch hot-swap hard disk drive cable connection*

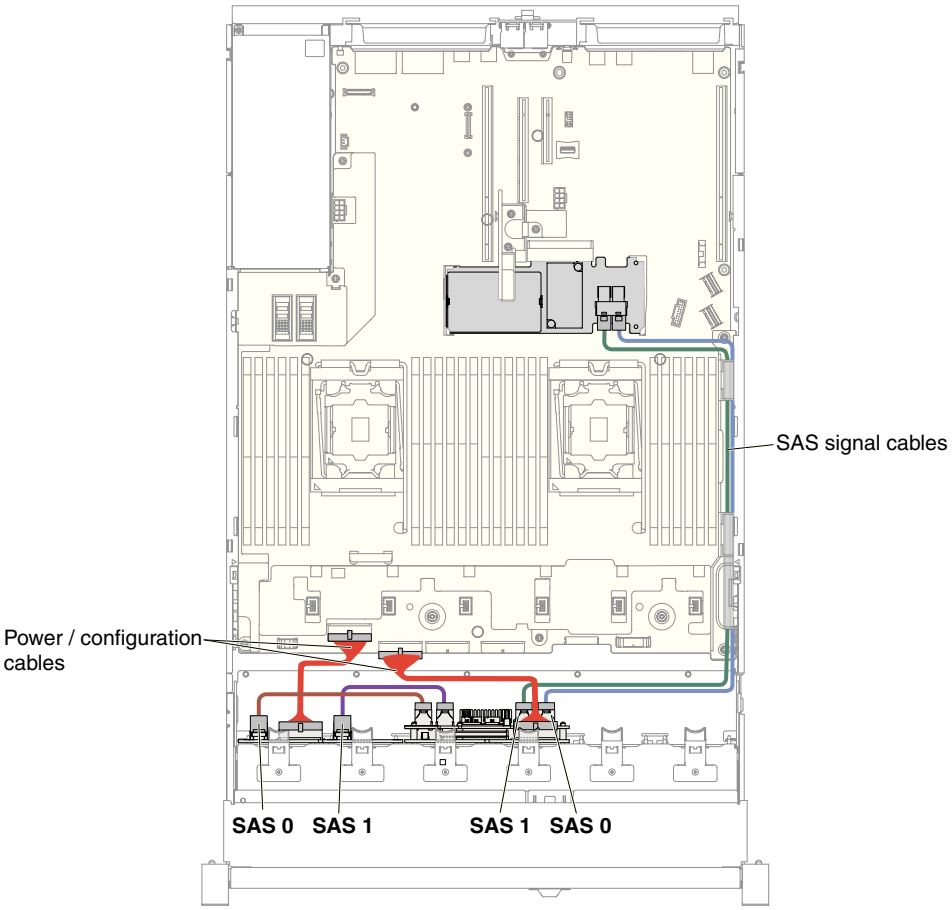


*Figure 57. 16x2.5-inch hot-swap hard disk drive cabling*

## 24x2.5-inch drive model

The internal routing for the 24x2.5-inch drive model cables.

The following illustration shows the internal routing for the 24x2.5-inch drive model cables.

### 24x2.5-inch hot-swap hard disk drive model

- 24x2.5-inch hot-swap hard disk drive with 3 identical backplanes

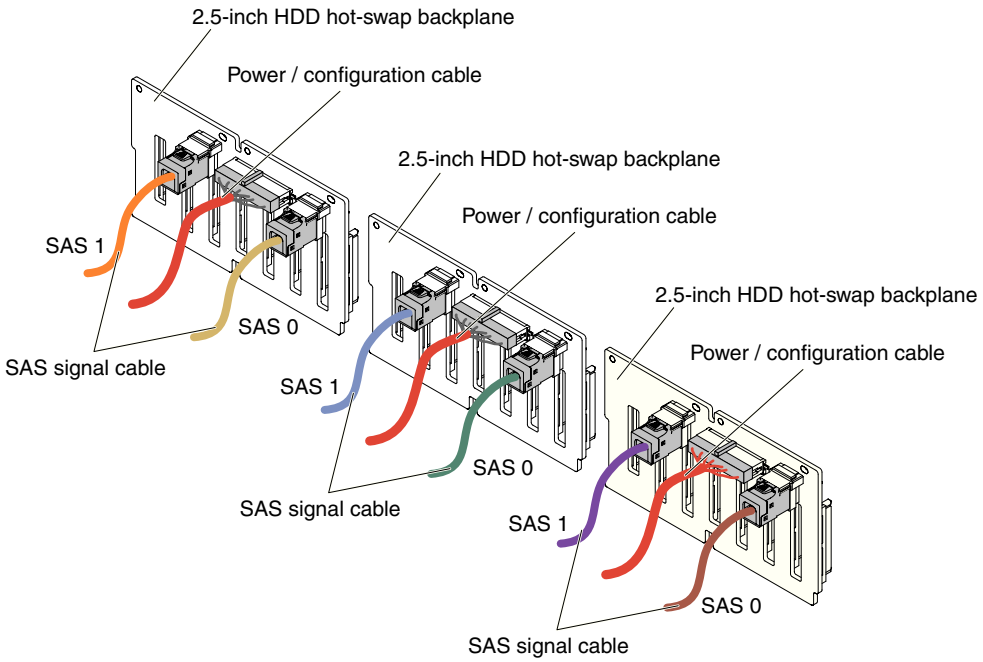


*Figure 58. 24x2.5-inch hot-swap hard disk drive cabling*

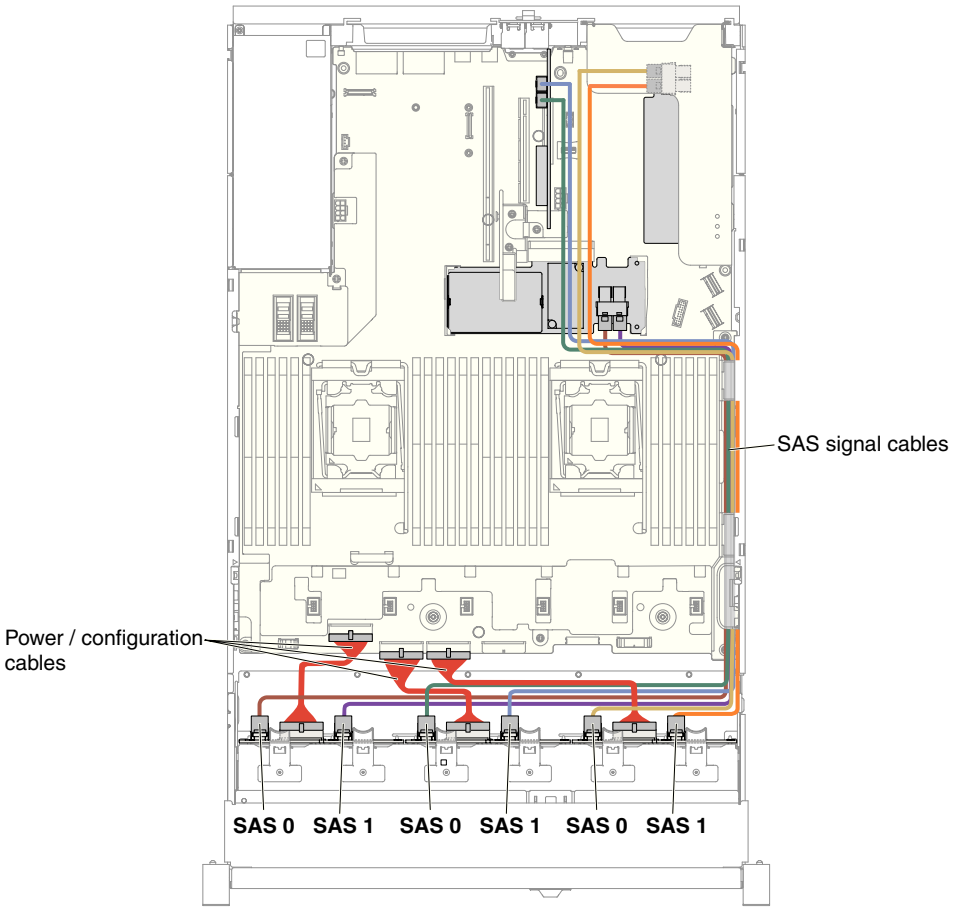


*Figure 59. 24x2.5-inch hot-swap hard disk drive cabling*

- 24x2.5-inch hot-swap hard disk drive with one expander

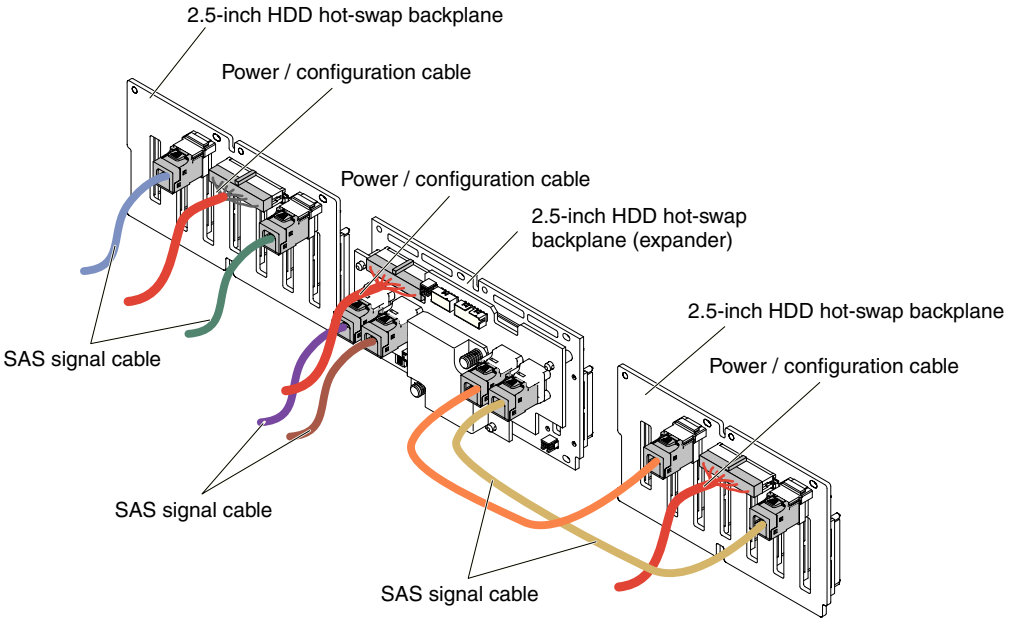


*Figure 60. 24x2.5-inch hot-swap hard disk drive cabling*

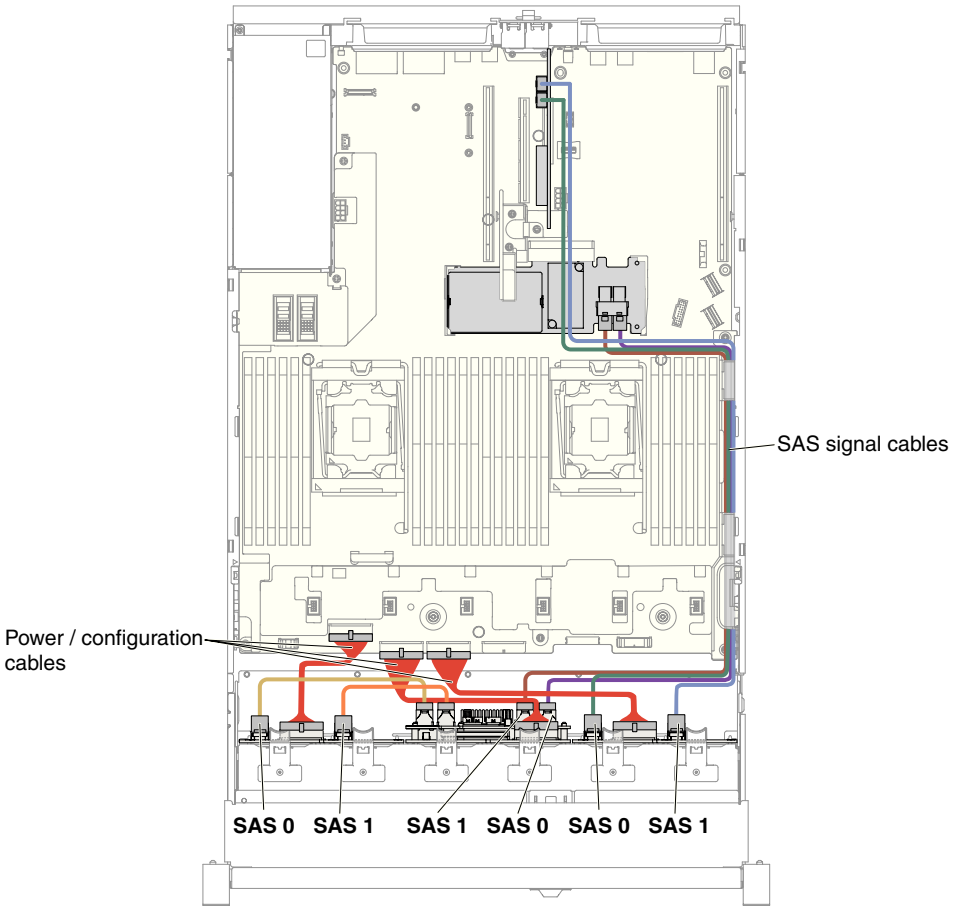


*Figure 61. 24x2.5-inch hot-swap hard disk drive cabling*

- 24x2.5-inch hot-swap hard disk drive with two expanders

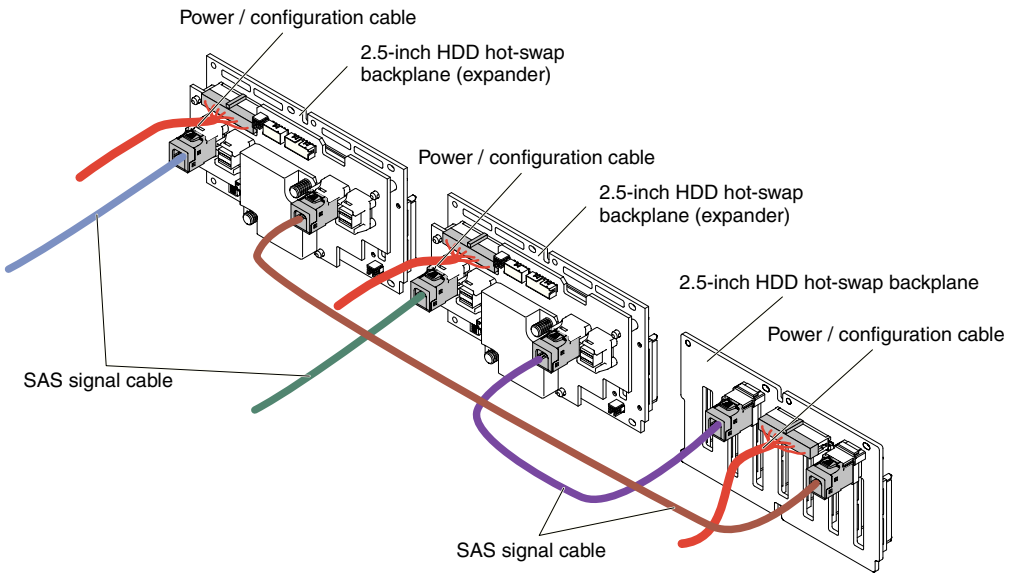


*Figure 62. 24x2.5-inch hot-swap hard disk drive cable connection*

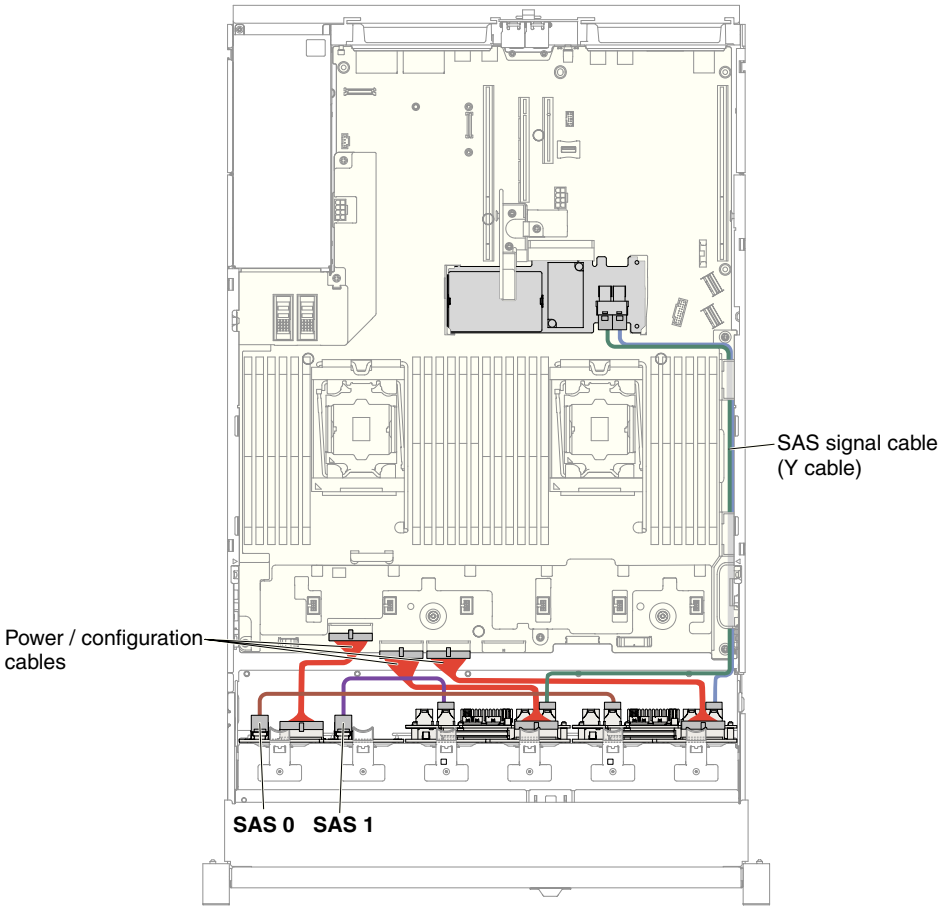


*Figure 63. 24x2.5-inch hot-swap hard disk drive cabling*

## 3.5-inch hard disk drive cable connection

The following illustrations show the cabling information for the 3.5-inch drive models.

**Important:** Make sure all SAS cables are routed lower than the DIMM latches.

### 8x3.5-inch drive model

The internal routing for the 8x3.5-inch drive model cables.

The following illustration shows the internal routing for the 8x3.5-inch drive model cables.

#### 8x3.5-inch simple-swap hard disk drive model

- 8x3.5-inch simple-swap hard disk drive with hardware RAID

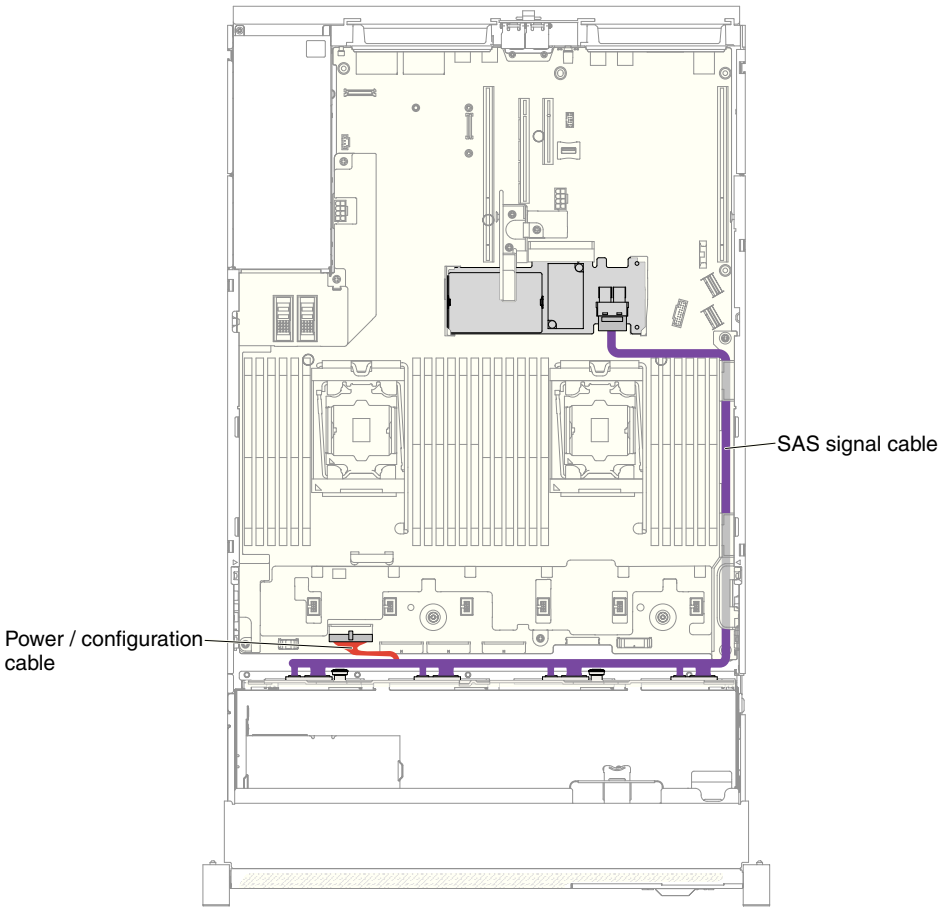


*Figure 64. 8x3.5-inch simple-swap hard disk drives with hardware RAID cabling*

- 8x3.5-inch simple-swap hard disk drive with software RAID

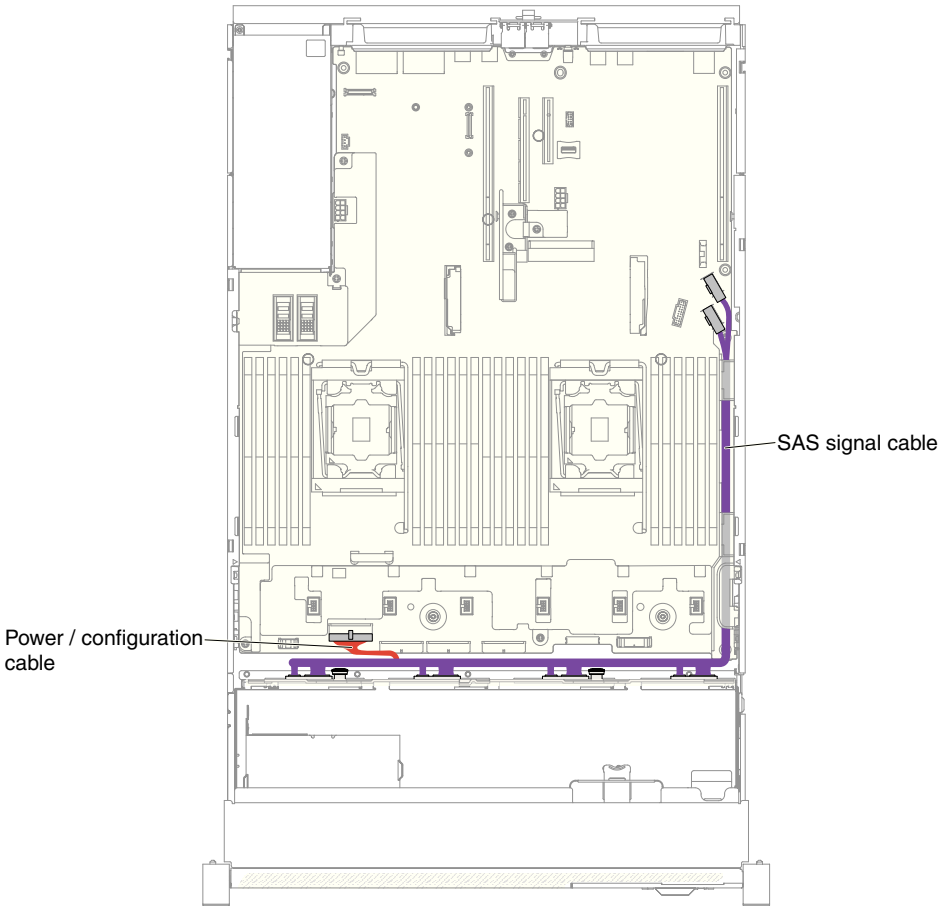


*Figure 65. 8x3.5-inch simple-swap hard disk drives with software RAID cabling*

## 8x3.5-inch hot-swap hard disk drive model

- 8x3.5-inch hot-swap hard disk drive

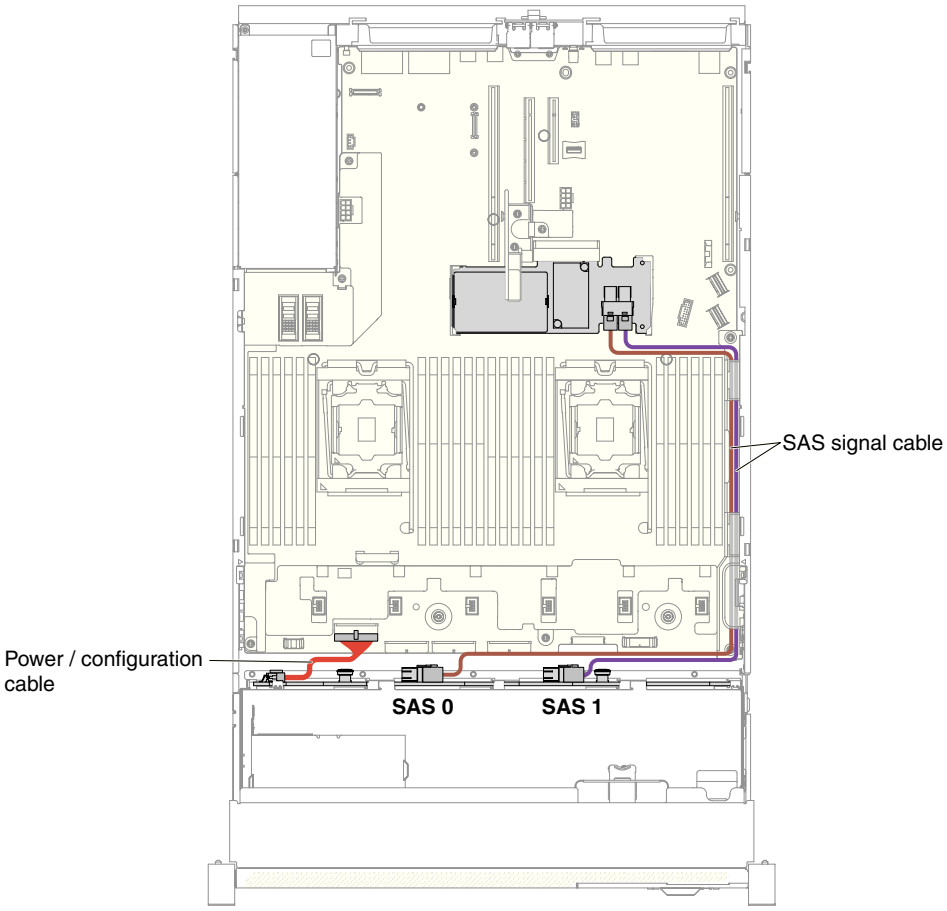


*Figure 66. 8x3.5-inch hot-swap hard disk drives cabling*

## 12x3.5-inch drive model

The internal routing for the 12x3.5-inch drive model cables.

The following illustration shows the internal routing for the 12x3.5-inch drive model cables.

### 12x3.5-inch hot-swap hard disk drive model

- 12x3.5-inch hot-swap hard disk drive

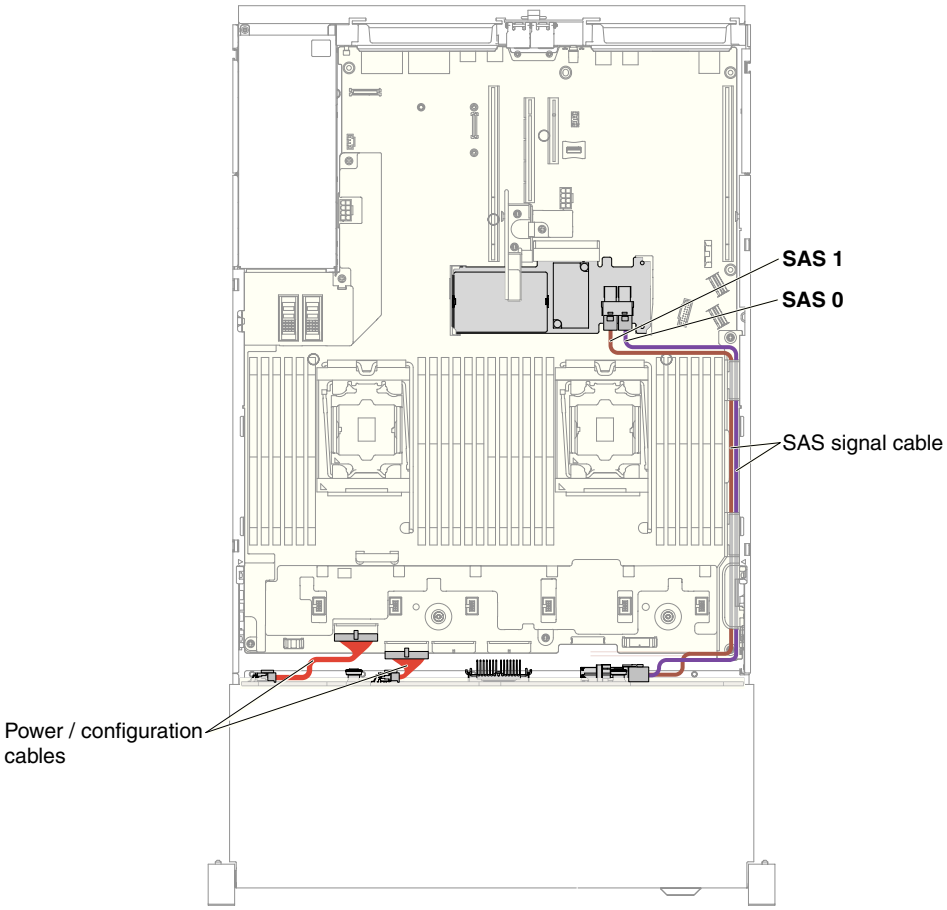


*Figure 67. 12x3.5-inch hot-swap hard disk drive cabling*

# Removing and replacing server components

This section provides information for removing and replacing components in the server.

## Removing and replacing structural parts

Replacement of structural parts is your responsibility. If IBM installs a structural part at your request, you will be charged for the installation.

The illustrations in this document might differ slightly from your hardware.

## Removing the top cover

Use this information to remove the top cover.

### About this task

To remove the top cover, complete the following steps:

### Procedure

1. Read the safety information that begins on page “Safety” on page vii and “Installation guidelines” on page 283.
2. Turn off the server and peripheral devices and disconnect the power cords and all external cables, if necessary.
3. If the server has been installed in a rack, press down on the left and right side latches and slide the server out of the rack enclosure until both slide rails lock..

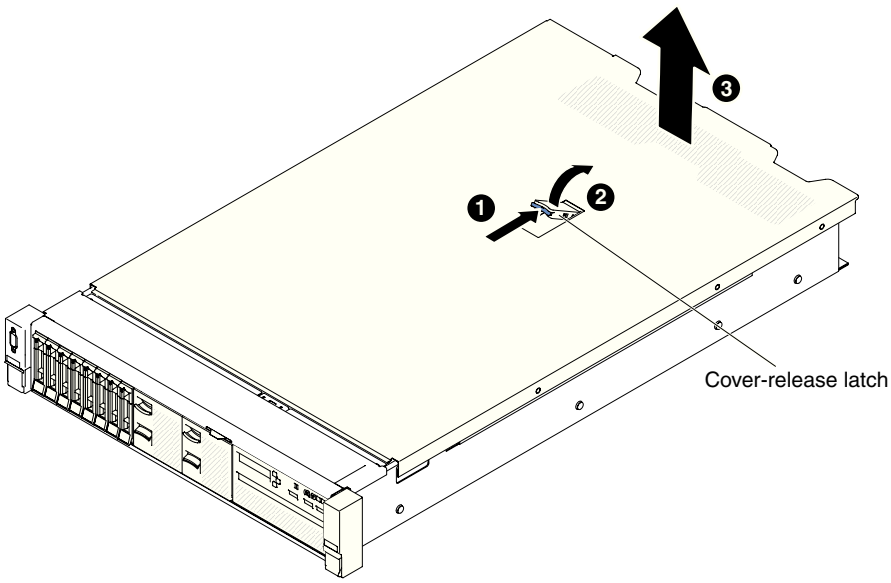


*Figure 68. Top cover removal*

4. **1** Push the cover-release latch back, **2** then lift it up. Slide the cover back, and **3** then lift off the server. Set the cover aside.

   **Attention:** For proper cooling and airflow, replace the server cover before you turn on the server.
5. If you are instructed to return the top cover, follow all of the packaging instructions, and use any packaging materials for shipping that are supplied to you.

## Replacing the top cover

Use this information to replace the server top cover.

### About this task

To replace the server top cover, complete the following steps:

### Procedure

1. Make sure that all cables, adapters, and other components are installed and seated correctly and that you have not left loose tools or parts inside the server. Also, make sure that all internal cables are correctly routed.

   **Important:** Before you slide the top cover forward, make sure that all the tabs and the pins on the top and side of the top cover engage the chassis correctly.
2. Place the cover-release latch in the open (up) position.
3. Position the top cover on top of the server.
4. Insert the bottom tabs of the top cover into the matching slots in the server chassis.
5. Press down on the cover-release latch to slide the cover forward and lock the cover in place.

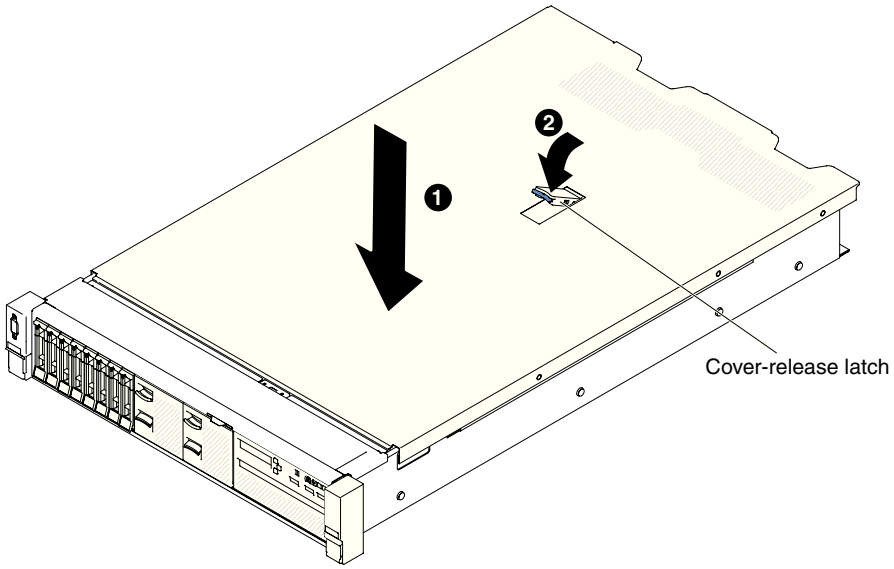


*Figure 69. Top cover installation*

6. Slide the server into the rack.
7. Reconnect the external cables and power cords.

# Removing and replacing Tier 1 CRUs

Replacement of Tier 1 CRUs is your responsibility. If IBM installs a Tier 1 CRU at your request, you will be charged for the installation.

The illustrations in this document might differ slightly from your hardware.

## Removing the air baffle

When you work with some optional devices, you must first remove the air baffle to access certain components or connectors on the system board. The following illustration shows how to remove the air baffle.

### About this task

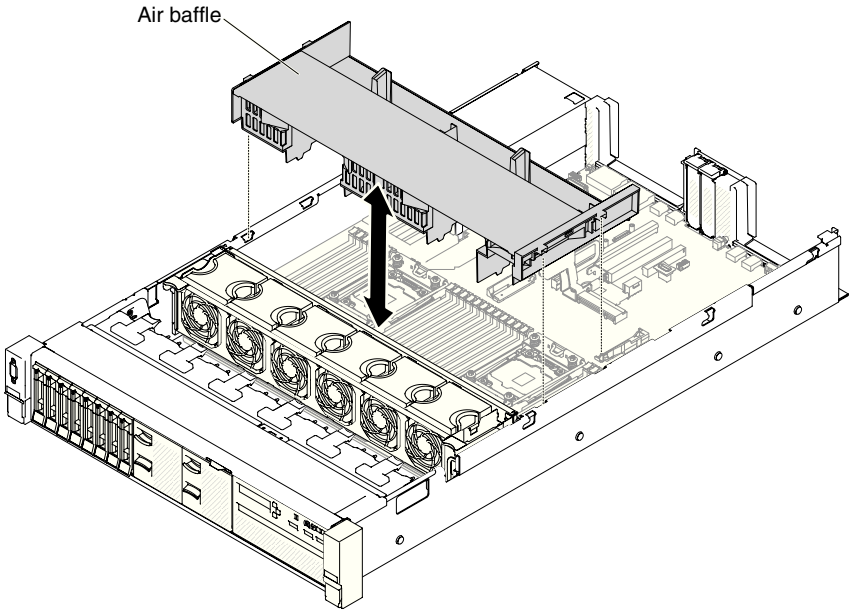


*Figure 70. Air baffle removal*

To remove the air baffle, complete the following steps:

### Procedure

1. Read the safety information that begins on page “Safety” on page vii and “Installation guidelines” on page 283.
2. Turn off the server and peripheral devices and disconnect the power cords and all external cables (see “Turning off the server” on page 40).
3. Remove the top cover (see “Removing the top cover” on page 146).
4. Remove PCI riser-card assemblies, if needed (see Removing a riser-card assembly).
5. Disconnect the RAID adapter battery/flash power module cables, if needed.
6. Place your fingers under the back of the top of the air baffle; then, lift the air baffle out of the server.

   **Attention:** For proper cooling and airflow, replace the air baffle before you turn on the server. Operating the server with the air baffle removed might damage server components.

7. If you are instructed to return the air baffle, follow all of the packaging instructions, and use any packaging materials for shipping that are supplied to you.

## Replacing the air baffle

Use this information to replace the air baffle.

### About this task

To replace the air baffle, complete the following steps:

### Procedure

1. Read the safety information that begins on page "Safety" on page vii and "Installation guidelines" on page 283.
2. Turn off the server and peripheral devices and disconnect the power cords and all external cables.
3. Remove the top cover (see "Removing the top cover" on page 146).
4. Align the air baffle tabs with the baffle slots on both sides of the chassis; then, lower the air baffle into the server. Press the air baffle down until it is securely seated.

   **Note:** Close the retaining clip on each end of the DIMM connector before installing the air baffle for proper cooling.

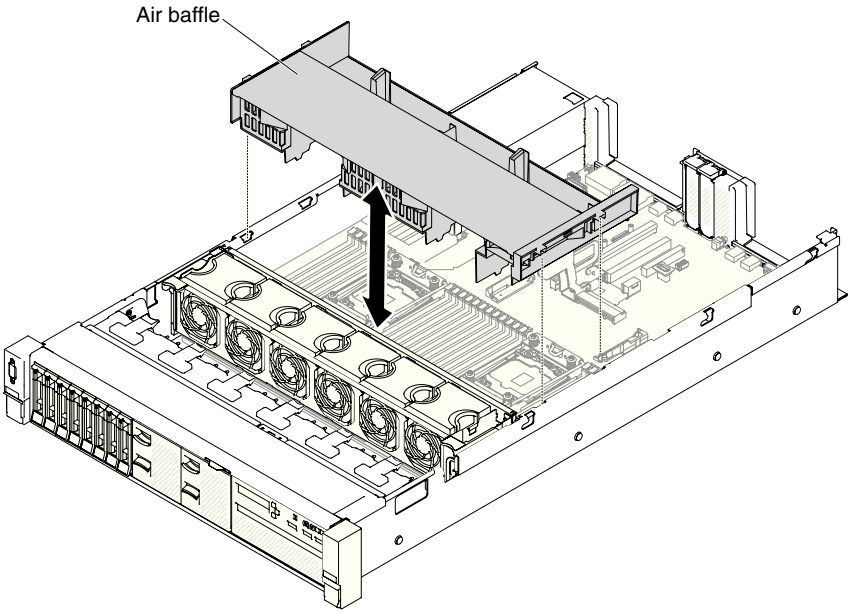


*Figure 71. Air baffle installation*

5. Replace PCI riser-card assemblies, if needed.
6. Reinstall the top cover (see "Replacing the top cover" on page 147).
7. Slide the server into the rack.
8. Reconnect the power cords and any cables that you removed.
9. Turn on the peripheral devices and the server.

## Removing the power paddle module

Use this information to remove the power paddle module.

### About this task

To remove the power paddle module, complete the following steps:

### Procedure

1. Read the safety information that begins on “Safety” on page vii and “Installation guidelines” on page 283.
2. Turn off the server, and disconnect all power cords and external cables.
3. Remove the top cover (see “Removing the top cover” on page 146).
4. Remove the power supplies. (See “Removing a power supply” on page 228).
5. Grasp the handle and pull the power paddle module up.

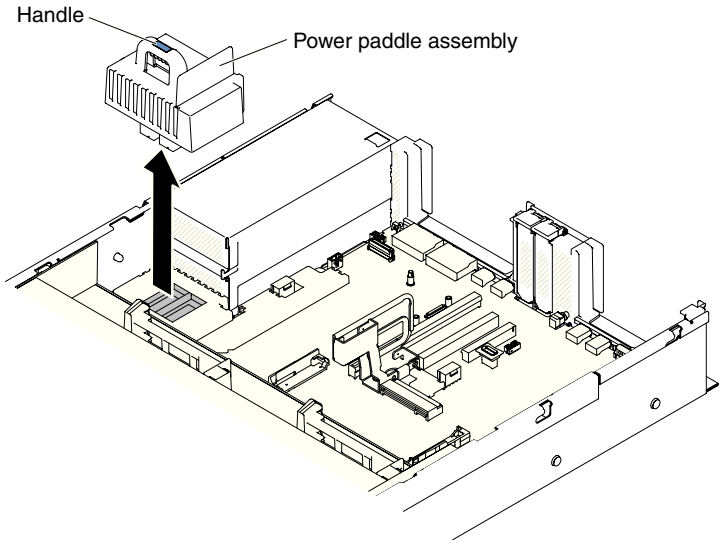


*Figure 72. Power paddle module removal*

6. If you are instructed to return the power paddle module, follow all packaging instructions, and use any packaging materials for shipping that are supplied to you.

## Replacing the power paddle module

Use this information to install the power paddle module.

### About this task

To install the power paddle module, complete the following steps:

### Procedure

1. Read the safety information that begins on “Safety” on page vii and “Installation guidelines” on page 283.
2. Turn off the server and peripheral devices and disconnect the power cords and all external cables, if necessary.
3. Remove the top cover (see “Removing the top cover” on page 146).
4. Grasp the handle and align the power paddle module with the connector on the system board. Push the power paddle module to the system board and make sure it is firmly seated.

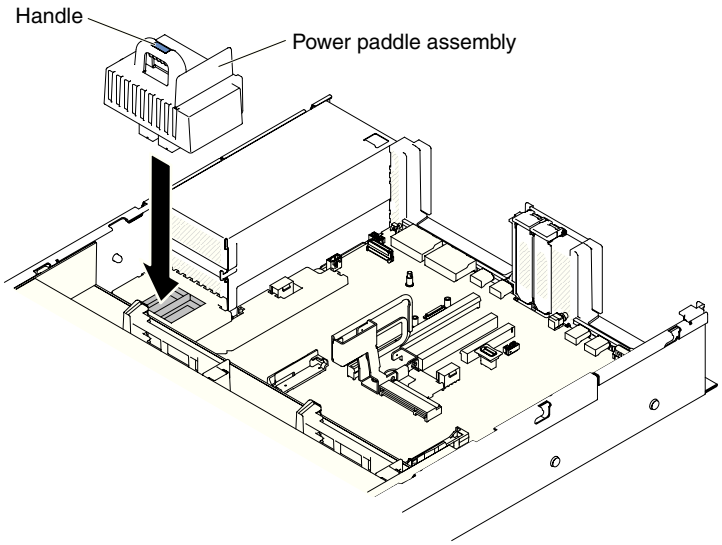


*Figure 73. Power paddle module installation*

5. Replacing the power supplies (See “Replacing a power supply” on page 229).
6. Replacing the top cover (see “Replacing the top cover” on page 147).
7. Slide the server into the rack.
8. Reconnect the power cords and all external cables, and turn on the server and peripheral devices.

## Removing the front USB assembly

Use this information to remove the front USB assembly.

### About this task

To remove the front USB assembly, complete the following steps.

### Procedure

1. Read the safety information that begins on “Safety” on page vii and “Installation guidelines” on page 283.
2. Turn off the server and peripheral devices and disconnect the power cords and all external cables, if necessary.
3. Remove the top cover (see “Removing the top cover” on page 146).
4. Disconnect the cable on the front USB assembly from the system board.
5. **1** Pull up the release latch slightly and **2** slide the front USB assembly out of the server.

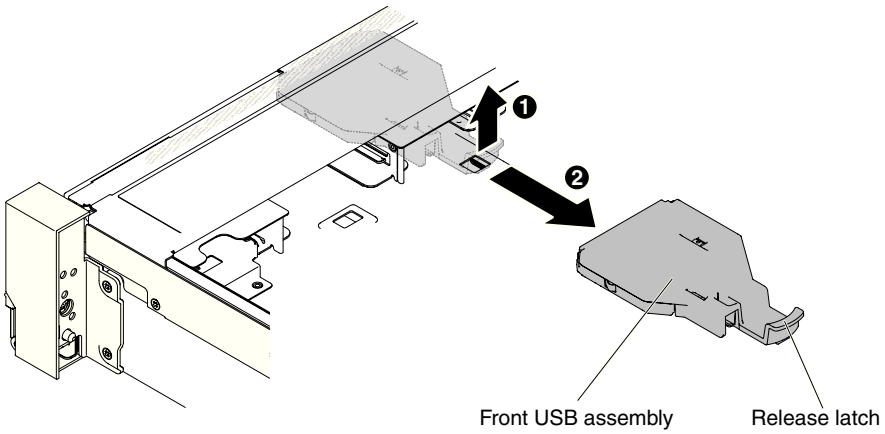


*Figure 74. Front USB assembly removal*

6. If you are instructed to return the front USB assembly, follow all packaging instructions, and use any packaging materials for shipping that are supplied to you.

## Replacing the front USB assembly

Use this information to replace the front USB assembly.

### About this task

To install the front USB assembly, complete the following steps.

### Procedure

1. Read the safety information that begins on “Safety” on page vii and “Installation guidelines” on page 283.
2. Turn off the server and peripheral devices and disconnect the power cords and all external cables, if necessary.
3. Remove the top cover (see “Removing the top cover” on page 146).
4. Align and slide the front USB assembly into the server until it clicks into place.

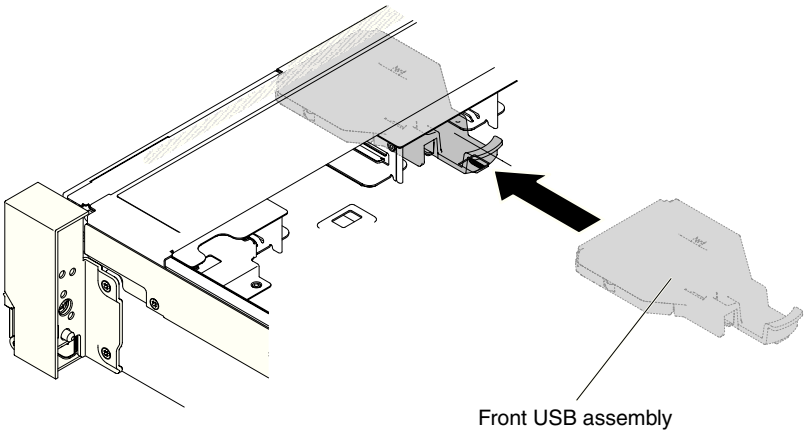


*Figure 75. Front USB assembly installation*

5. Connect the cable on the front USB assembly to the system board.
   The following illustration shows the cable routing for the front USB assembly.

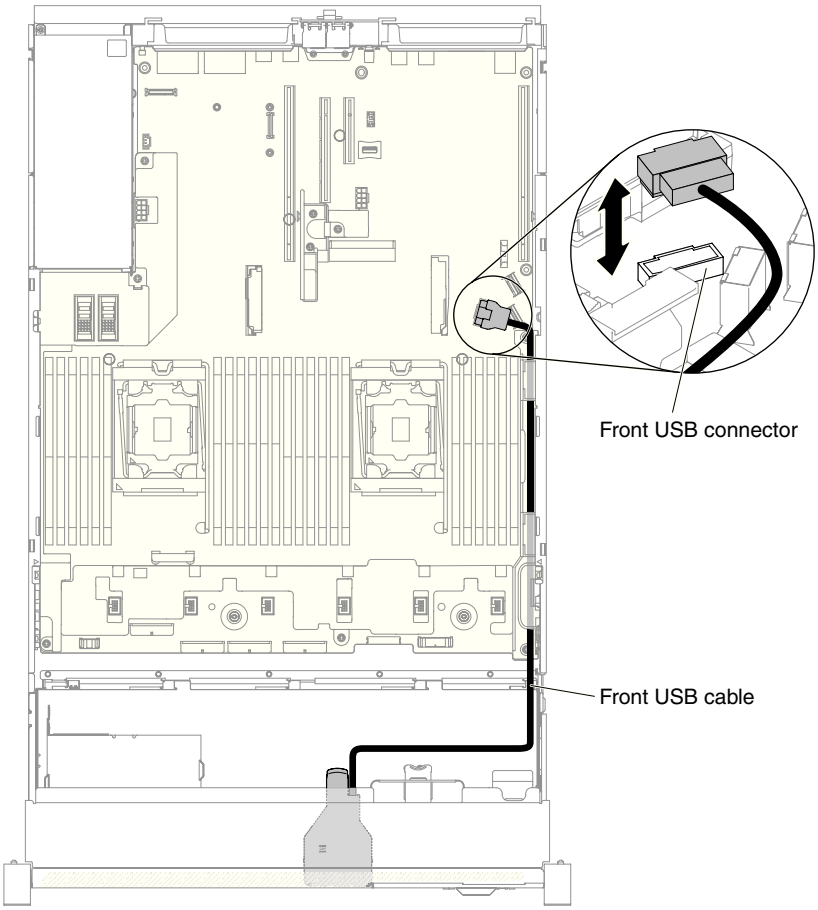


*Figure 76. Front USB assembly cable routing*

**Note:** To connect the front USB assembly cable on the system board, press evenly on the cable. Pressing on one side of the cable might cause damage to the cable or connector.

6. Replace the top cover (see "Replacing the top cover" on page 147).

7. Slide the server into the rack.
8. Reconnect the power cords and any cables that you removed.
9. Turn on the peripheral devices and the server.

## Removing a hot-swap hard disk drive

Use this information to remove a hot-swap hard disk drive.

### About this task

**Attention:**

- To avoid damage to the hard disk drive connectors, make sure that the server top cover is in place and fully closed whenever you install or remove a hard disk drive.
- To make sure that there is adequate system cooling, do not operate the server for more than 2 minutes without either a hard disk drive or a filler panel installed in each bay.
- Before you make changes to disk drives, disk drive controllers (including controllers that are integrated on the system board), disk drive backplanes, or disk drive cables, back up all important data that is stored on hard disks.
- Before you remove any component of a RAID array, back up all RAID configuration information.

To remove a hot-swap hard disk drive, complete the following steps.

### Procedure

1. Read the safety information that begins on “Safety” on page vii and “Installation guidelines” on page 283.
2. Make sure you save the data on your drive, especially if it is part of a RAID array, before you remove it from the server.
3. Slide the latch to unlock the drive handle.

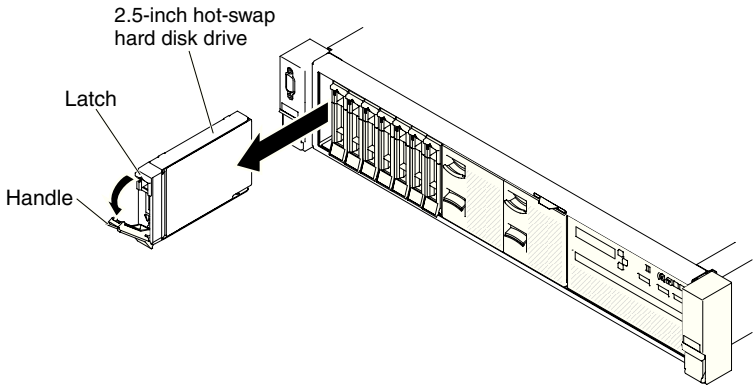


*Figure 77. 2.5-inch hot-swap hard disk drives removal*

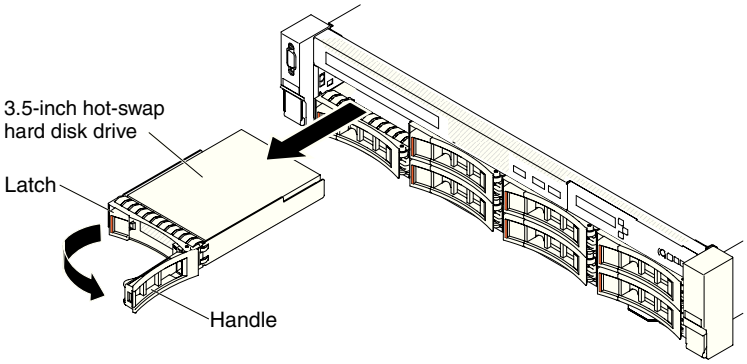


*Figure 78. 3.5-inch hot-swap hard disk drives removal*

4. Grasp the handle and slide the drive out of the drive bay.
5. Reinstall the drive bay filler panel.
6. If you are instructed to return the drive assembly, follow all packaging instructions, and use any packaging materials for shipping that are supplied to you.

## Replacing a hot-swap hard disk drive

Use this information to install a hot-swap hard disk drive.

### About this task

The following notes describe the type of hard disk drives that the server supports and other information that you must consider when you install a hard disk drive. For a list of supported hard disk drives, see http://www.ibm.com/systems/info/x86servers/serverproven/compat/us/.

- Locate the documentation that comes with the hard disk drive and follow those instructions in addition to the instructions in this chapter.
- As a general consideration, do not mix standard 512-byte and advanced 4-KB format drives in the same RAID array because it may lead to potential performance issues.
- Make sure that you have all the cables and other equipment that are specified in the documentation that comes with the drive.
- Select the bay in which you want to install the drive.
- Check the instructions that come with the drive to determine whether you have to set any switches or jumpers on the drive. If you are installing a SAS or SATA hard disk drive, be sure to set the SAS or SATA ID for that device.
- The hot-swap server models support up to twenty-six 2.5-inch or fourteen 3.5-inch hot-swap SAS or SATA hard disk drives.
- The electromagnetic interference (EMI) integrity and cooling of the server are protected by having all bays and PCI Express slots covered or occupied. When you install a drive or a PCI Express adapter, save the EMC shield and filler panel from the bay or PCI Express adapter slot cover in the event that you later remove the device.
- For a complete list of supported optional devices for the server, see http://www.ibm.com/systems/info/x86servers/serverproven/compat/us/.

To install a hot-swap SAS or SATA hard disk drive, complete the following steps:

**Note:** If you have only one hard disk drive, you must install it in the bay 0 (upper-left).

## Procedure

1. Read the safety information that begins on "Safety" on page vii and "Installation guidelines" on page 283.
2. Remove the filler panel from the empty drive bay. Keep the filler panel in a safe place.
3. Touch the static-protective package that contains the drive to any unpainted metal surface on the server; then, remove the drive from the package and place it on a static-protective surface.
4. Install the hard disk drive in the drive bay:
   a. Make sure that the tray handle is in the open (unlocked) position.
   b. Align the drive with the guide rails in the bay.

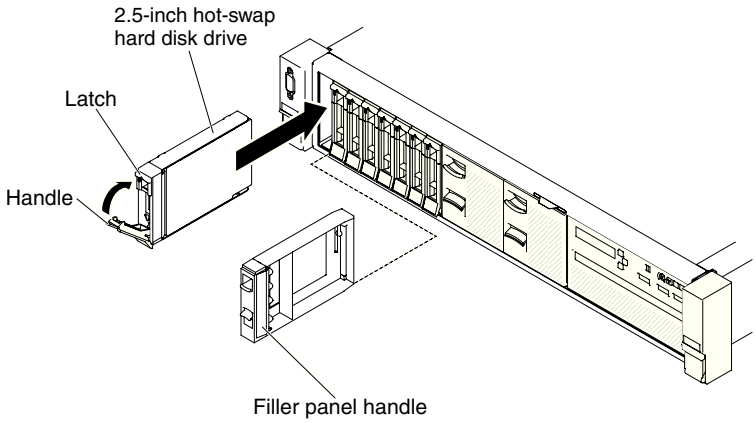


*Figure 79. 2.5-inch hot-swap hard disk drives installation*

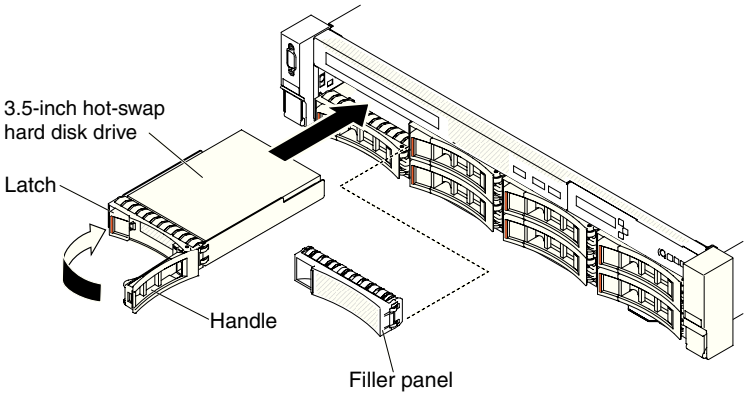


*Figure 80. 3.5-inch hot-swap hard disk drives installation*

   c. Gently push the drive into the bay until the drive stops.
   d. Rotate the tray handle to the closed (locked) position.
   e. Check the hard disk drive status LED to verify that the hard disk drive is operating correctly. If the yellow hard disk drive status LED of a drive is lit continuously, that drive is faulty and must be replaced. If the green hard disk drive activity LED is flashing, the drive is being accessed.

**Note:** If the server is configured for RAID operation using a ServeRAID adapter, you might have to reconfigure your disk arrays after you install hard disk drives. See the ServeRAID adapter documentation for additional information about RAID operation and complete instructions for using the ServeRAID adapter.

5. If you are installing additional hot-swap hard disk drives, do so now.
6. Turn on the peripheral devices and the server.

## Removing a simple-swap hard disk drive

Use this information to remove a simple-swap hard disk drive.

### About this task

You must turn off the server before removing simple-swap drives from the server. To remove a simple-swap SATA hard disk drive, complete the following steps.

**Attention:**

- To avoid damage to the hard disk drive connectors, make sure that the server cover is in place and fully closed whenever you install or remove a hard disk drive.
- To make sure that there is adequate system cooling, do not operate the server for more than 2 minutes without either a hard disk drive or a filler panel installed in each bay.

### Procedure

1. Read the safety information that begins on "Safety" on page vii and "Installation guidelines" on page 283.
2. Turn off the server and peripheral devices and disconnect the power cords and all external cables.
3. Pinch on the release latch and pull the hard disk drive out of the drive bay.

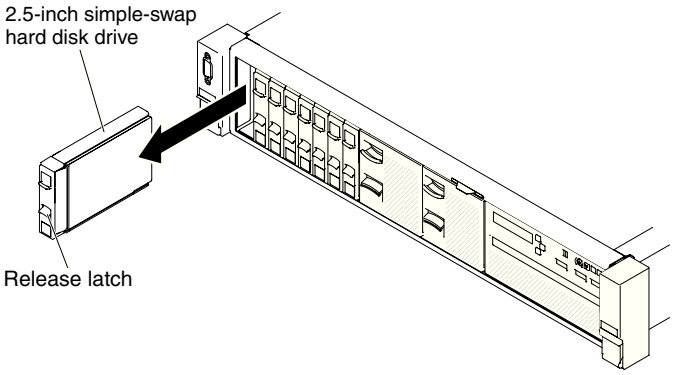


*Figure 81. 2.5-inch simple-swap hard disk drive removal*

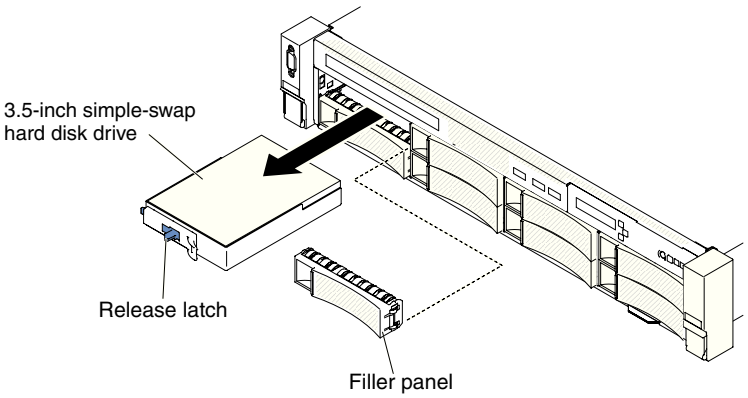


*Figure 82. 3.5-inch simple-swap hard disk drive removal*

4. Reinstall the drive bay filler panel that you removed earlier, if needed.
5. If you are instructed to return the drive assembly, follow all packaging instructions, and use any packaging materials for shipping that are supplied to you.

## Replacing a simple-swap hard disk drive

Use this information to install a simple-swap hard disk drive.

### About this task

You must turn off the server before installing simple-swap drives in the server. Before you install a simple-swap SATA hard disk drive, read the following information. For a list of supported hard disk drives, see http://www.ibm.com/systems/info/x86servers/serverproven/compat/us/.

- Locate the documentation that comes with the hard disk drive and follow those instructions in addition to the instructions in this chapter.
- As a general consideration, do not mix standard 512-byte and advanced 4-KB format drives in the same RAID array because it may lead to potential performance issues.
- Make sure that you have all the cables and other equipment that are specified in the documentation that comes with the drive.
- Select the bay in which you want to install the drive.
- Check the instructions that come with the drive to determine whether you have to set any switches or jumpers on the drive. If you are installing a SATA device, be sure to set the SATA ID for that device.
- The simple-swap server models support up to sixteen 2.5-inch or eight 3.5-inch simple-swap SATA hard disk drives. Do not install hot-swap drives into a simple-swap server model, it is not supported.
- You can install one 2.5-inch simple-swap SATA hard disk drives in bay 0 in the server. Do not install hot-swap drives into a simple-swap server model, it is not supported.
- The simple-swap server models are available only in non-RAID configurations.
- The electromagnetic interference (EMI) integrity and cooling of the server are protected by having all bays and PCI Express slots covered or occupied. When you install a drive or a PCI Express adapter, save the EMC shield and filler panel from the bay or PCI Express adapter slot cover in the event that you later remove the device.

To install a simple-swap hard disk drive, complete the following steps:

## Procedure

1. Read the safety information that begins on “Safety” on page vii and “Installation guidelines” on page 283.
2. Turn off the server and peripheral devices and disconnect the power cords and all external cables.
3. Remove the filler panel from the empty drive bay.
4. Touch the static-protective package that contains the drive to any unpainted metal surface on the server; then, remove the drive from the package and place it on a static-protective surface.
5. Install the hard disk drive in the drive bay. Align the drive assembly with the guide rails in the bay and gently push the drive into the bay until the drive stops.

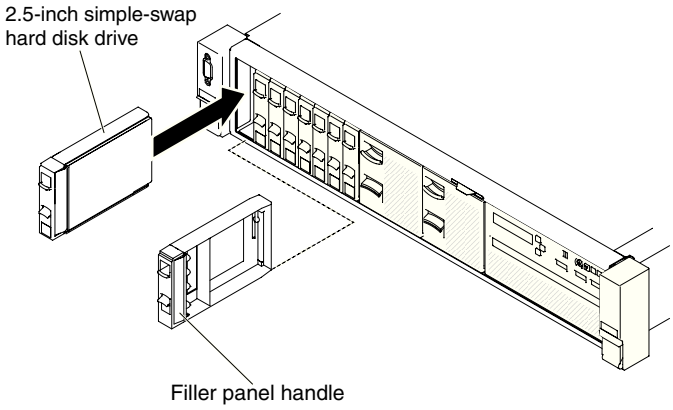


*Figure 83. 2.5-inch simple-swap hard disk drive installation*

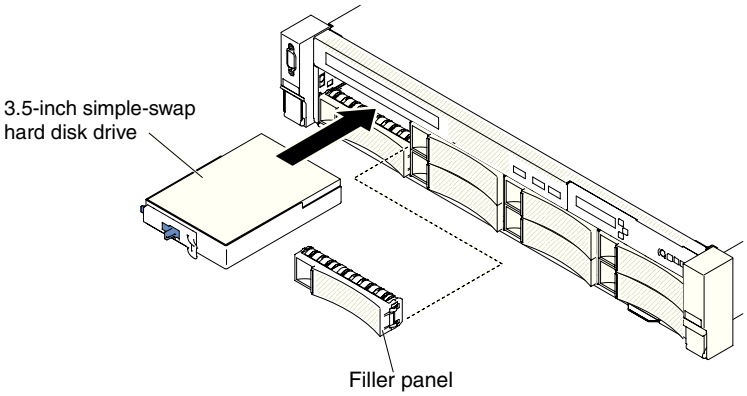


*Figure 84. 3.5-inch simple-swap hard disk drive installation*

6. Reinstall the drive bay filler panel that you removed earlier, if needed.
7. If you are installing additional simple-swap hard disk drives, do so now.
8. Turn on the peripheral devices and the server.

## Removing the optical drive cable

Use this information to remove the optical drive cable.

### About this task

To remove the optical cable, complete the following steps:

### Procedure

1. Read the safety information that begins on “Safety” on page vii and “Installation guidelines” on page 283.
2. Turn off the server and peripheral devices and disconnect the power cords.
3. Remove the top cover (see “Removing the top cover” on page 146).
4. Remove the fan cage assembly (see “Removing the fan cage assembly” on page 172).
5. Pull the connector toward the front of the server to remove the optical drive cable from the connector on the system board.

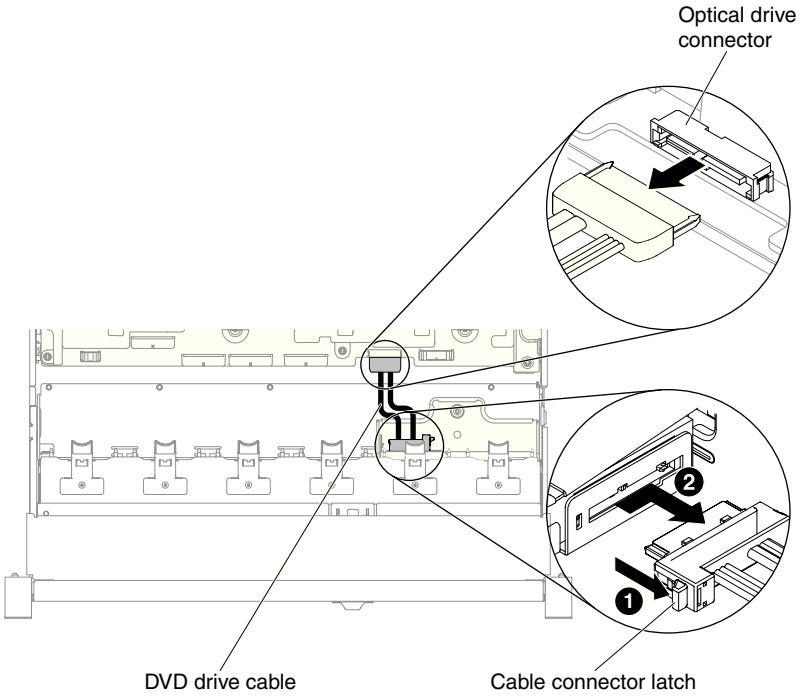


*Figure 85. Optical drive cable connection*

6. From the rear of the optical drive cage, **1** press and hold the connector latch (on the left of the cable connector). At the same time, **2** grasp the cable connector and slide it to the right. Remove the optical drive cable from the connector on the rear of the optical drive cage.

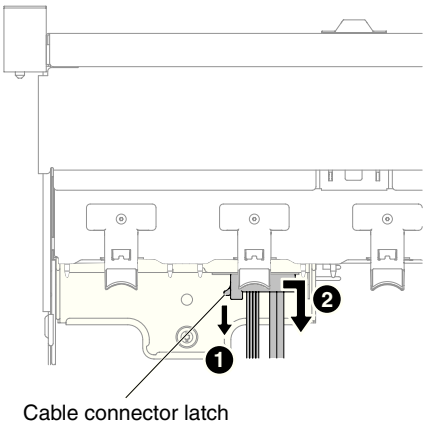


*Figure 86. Optical drive cable latch*

7. If you are instructed to return the optical drive cable, follow all packaging instructions, and use any packaging materials for shipping that are supplied to you.

## Replacing the optical drive cable

Use this information to install the optical drive cable.

### About this task

To install the optical drive cable, complete the following steps:

### Procedure

1. Read the safety information that begins on “Safety” on page vii and “Installation guidelines” on page 283.
2. Turn off the server and peripheral devices and disconnect the power cords and all external cables.
3. Remove the top cover (see “Removing the top cover” on page 146).
4. Remove the fan cage assembly (see “Removing the fan cage assembly” on page 172).
5. Align the cable connector with the slot on the rear of the optical drive cage. **1** Press and hold the connector latch; then, **2** push the cable connector into the optical drive cage connector and slide it to the left until it is firmly seated.

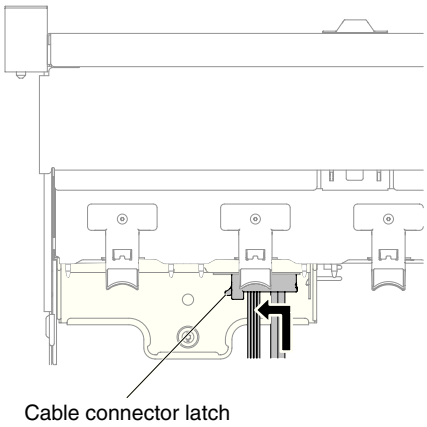


*Figure 87. Optical drive cable latch*

The following illustration shows cable routing for the optical cable:

**Attention:** Follow the optical drive cable routing as the illustration shows. Make sure that the cable is not pinched and does not cover any connectors or obstruct any components on the system board.

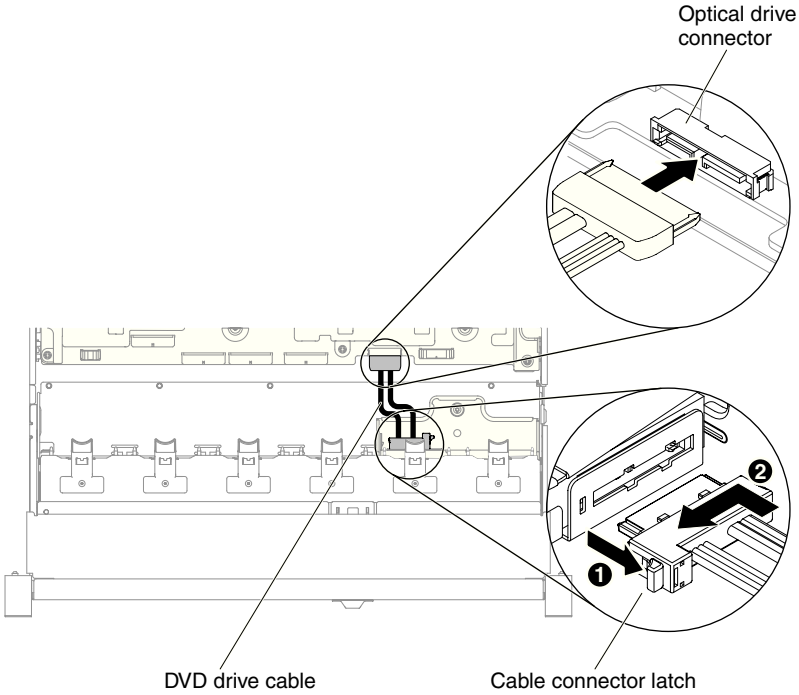


*Figure 88. Optical drive cable routing*

6. Replace the fan cage assembly (see "Replacing the fan cage assembly" on page 173).
7. Replace the top cover (see "Replacing the top cover" on page 147).
8. Slide the server into the rack.
9. Reconnect the power cords and any cables that you removed.
10. Turn on the peripheral devices and the server.

## Removing an optical drive

Use this information to remove an optical drive.

### About this task

You can go to "Front view" on page 19 to see the locations of an optical drive on the server.

To remove an optical drive, complete the following steps:

### Procedure

1. Read the safety information that begins on "Safety" on page vii and "Installation guidelines" on page 283.
2. Turn off the server and peripheral devices and disconnect all power cords.
3. Remove the server top cover (see "Removing the top cover" on page 146).
4. **1** Press and hold the release tab to the right as you **2** push the drive from the rear to slide it out of the bay.

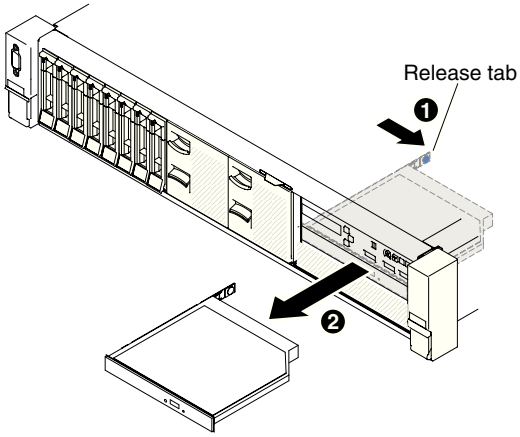


*Figure 89. Optical drive removal*

5. Slide the drive retention clip from the side of the drive. Save the clip to use when you install the replacement drive or replace the optical drive filler panel.

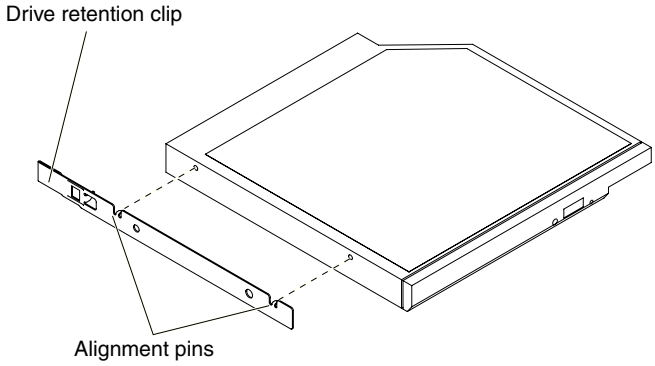


*Figure 90. Optical drive retention clip removal*

6. Attach the drive retention clip to the side of the optical drive filler panel that you removed in step 4 on page 164.

7. Slide the optical drive filler panel into the optical drive bay until the optical drive filler panel clicks into place.
8. If you are instructed to return the optical drive, follow all packaging instructions, and use any packaging materials for shipping that are supplied to you.

## Replacing an optical drive

Use this information to install an optical drive.

### About this task

The following notes describe the type of drives that the server supports and other information that you must consider when you install a drive. For a list of supported drives, see http://www.ibm.com/systems/info/x86servers/serverproven/compat/us/.

- You can go to "Front view" on page 19 to see the locations of an optical drive on the server.
- Locate the documentation that comes with the drive and follow those instructions in addition to the instructions in this chapter.
- Make sure that you have all the cables and other equipment that are specified in the documentation that comes with the drive.
- The server supports one ultra-slim SATA optical drive.

To install an optional optical drive, complete the following steps:

### Procedure

1. Read the safety information that begins on "Safety" on page vii and "Installation guidelines" on page 283.
2. Turn off the server and peripheral devices and disconnect the power cords and all external cables.

   **Note:** When you disconnect the power source from the server, you lose the ability to view the LEDs because the LEDs are not lit when the power source is removed. Before you disconnect the power source, make a note of which LEDs are lit, including the LEDs that are lit on the operation information panel, and LEDs inside the server on the system board.
3. Remove the top cover (see "Removing the top cover" on page 146).
4. Remove the optical drive filler panel if it is installed. Locate the blue release tab on the rear of the optical drive filler panel; then, while you press the tab, push the optical drive filler panel out of the drive bay.
5. Remove the retention clip from the side of the optical drive filler panel. Save the optical drive filler panel for future use.

   **Note:** If you are installing an optical drive that contains a laser, observe the following safety precautions.

   **Statement 3**

**CAUTION:**
**When laser products (such as CD-ROMs, optical drives, fiber optic devices, or transmitters) are installed, note the following:**

- **Do not remove the covers. Removing the covers of the laser product could result in exposure to hazardous laser radiation. There are no serviceable parts inside the device.**
- **Use of controls or adjustments or performance of procedures other than those specified herein might result in hazardous radiation exposure.**

**DANGER**

**Some laser products contain an embedded Class 3A or Class 3B laser diode. Note the following.**

**Laser radiation when open. Do not stare into the beam, do not view directly with optical instruments, and avoid direct exposure to the beam.**

Class 1 Laser Product
Laser Klasse 1
Laser Klass 1
Luokan 1 Laserlaite
Appareil À Laser de Classe 1

6. Touch the static-protective package that contains the new optical drive to any unpainted metal surface on the server; then, remove the optical drive from the package and place it on a static-protective surface.
7. Follow the instructions that come with the drive to set any jumpers or switches.
8. Attach the drive retention clip that you removed from the optical drive filler panel to the side of the new optical drive.

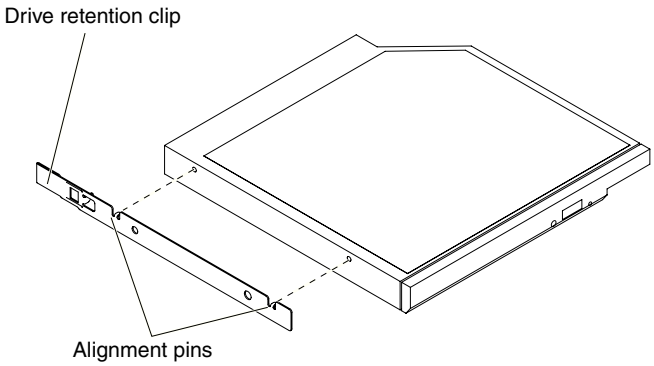


*Figure 91. Optical drive retention clip installation*

9. Align the optical drive in the drive bay and slide the optical drive into the optical drive bay until the optical drive clicks into place.

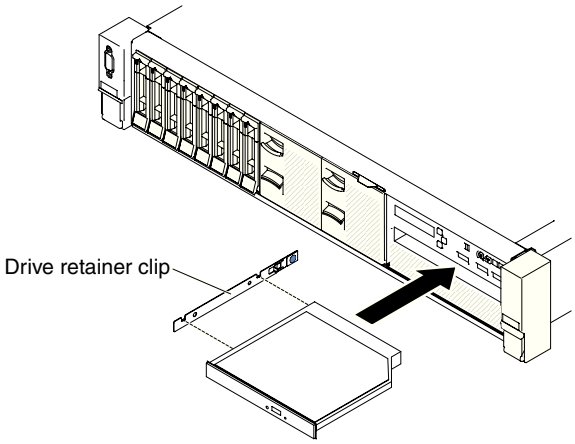


*Figure 92. Optical drive installation*

10. Connect the optical drive cable (see "Replacing the optical drive cable" on page 161).
11. Reconnect the power cords and any cables that you removed.
12. Turn on the peripheral devices and the server.

## Removing a memory module

Use this information to remove a memory module.

### About this task

To remove a dual inline memory module (DIMM), complete the following steps:

### Procedure

1. Read the safety information that begins on "Safety" on page vii and "Installation guidelines" on page 283.
2. Turn off the server and peripheral devices and disconnect all power cords.
3. Remove the top cover (see "Removing the top cover" on page 146).
4. Remove the air baffle (see "Removing the air baffle" on page 148).
5. Carefully open the retaining clips on each end of the DIMM connector and remove the DIMM.

   **Attention:** To avoid breaking the retaining clips or damaging the DIMM connectors, open and close the clips gently.

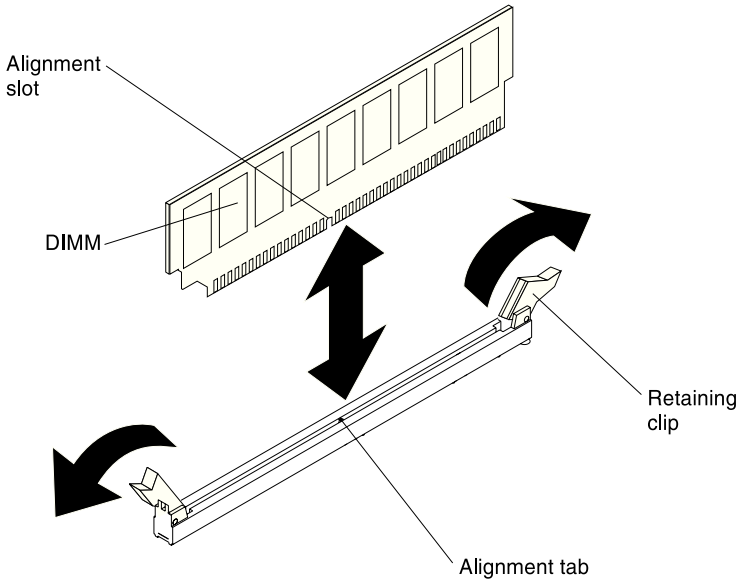


*Figure 93. DIMM removal*

6. If you are instructed to return the DIMM, follow all packaging instructions, and use any packaging materials for shipping that are supplied to you.

## Installing a memory module

The following notes describe the types of DIMMs that the server supports and other information that you must consider when you install DIMMs.

- When you install or remove DIMMs, the server configuration information changes. When you restart the server, the system displays a message that indicates that the memory configuration has changed.
- The server supports only industry-standard double-data-rate 4 (DDR4), 1600, 1866, or 2133 MHz, PC4-12800, PC4-14900, or PC4-17000 registered or load deduction, synchronous dynamic random-access memory (SDRAM) dual inline memory modules (DIMMs) with error correcting code (ECC). See http://www.ibm.com/systems/info/x86servers/serverproven/compat/us/ for a list of supported memory modules for the server.
  - The specifications of a DDR4 DIMM are on a label on the DIMM, in the following format.

    *ggggg eRxff* PC4*v-wwwwwm-aa-bb-ccd*

    where:

    - *ggggg* is the total capacity of the DIMM (for example, 1GB, 2GB, or 4GB)
    - *eR* is the number of ranks

      1R = single-rank

      2R = dual-rank

      4R = quad-rank
    - *xff* is the device organization (bit width)

      x4 = x4 organization (4 DQ lines per SDRAM)

      x8 = x8 organization

      x16 = x16 organization
    - *v* is the SDRAM and support component supply voltage (VDD)
      - Blank = 1.2 V specified
    - *wwwww* is the DIMM bandwidth, in MBps

12800 = 12.80 GBps (DDR4-1600 SDRAMs, 8-byte primary data bus)
14900 = 14.93 GBps (DDR4-1866 SDRAMs, 8-byte primary data bus)
17000 = 17.00 GBps (DDR4-2133 SDRAMs, 8-byte primary data bus)

- *m* is the DIMM type
  L = Load Reduction DIMM (LRDIMM)
  R = Registered DIMM (RDIMM)
- *aa* is the CAS latency, in clocks at maximum operating frequency
- *bb* is the JEDEC SPD Revision Encoding and Additions level
- *cc* is the reference design file for the design of the DIMM
- *d* is the revision number of the reference design of the DIMM

**Note:** To determine the type of a DIMM, see the label on the DIMM. The information on the label is in the format xxxxx nRxxx PC4v-xxxxxx-xx-xx-xxx. The numeral in the sixth numerical position indicates whether the DIMM is single-rank (n=1), dual-rank (n=2), or quad-rank (n=4).

- The following rules apply to DDR4 RDIMM speed as it relates to the number of RDIMMs in a channel:
  – When you install 1 RDIMM per channel, the memory runs at 2133 MHz
  – When you install 2 RDIMMs per channel, the memory runs at 1866 MHz
  – When you install 3 RDIMMs per channel, the memory runs at 1600 MHz
  – All channels in a server run at the fastest common frequency
  – Do not install registered and load reduction DIMMs in the same server
- The following rules apply to DDR4 RDIMM speed as it relates to the number of LRDIMMs in a channel:
  – When you install 1 LRDIMM per channel, the memory runs at 2133MHz
  – When you install 2 LRDIMMs per channel, the memory runs at 2133 MHz
  – When you install 3 LRDIMMs per channel, the memory runs at 1600 MHz
- The maximum memory speed is determined by the combination of the microprocessor, DIMM speed, DIMM type, Operating Modes in UEFI settings, and the number of DIMMs installed in each channel.
- The server supports a maximum of 24 single-rank, dual-rank RDIMMs or 24 quad-rank LRIMMs.
- The following table shows an example of the maximum amount of memory that you can install using ranked DIMMs:

*Table 10. Maximum memory installation using ranked DIMMs*

| Number of DIMMs | DIMM type | DIMM size | Total memory |
|---|---|---|---|
| 24 | Single-rank RDIMMs | 4 GB | 96 GB |
| 24 | Dual-rank RDIMMs | 8 GB | 192 GB |
| 24 | Dual-rank RDIMMs | 16 GB | 384 GB |
| 24 | Quad-rank LRDIMMs | 32 GB | 768 GB |
| 24 | Quad-rank LRDIMMs | 64 GB | 1536 GB |

- The RDIMM options that are available for the server are 4 GB, 8 GB, and 16 GB. The server supports a minimum of 4 GB and a maximum of 384 GB of system memory using RDIMMs.

- The LRDIMM option that is available for the server is 32 GB and 64 GB. The server supports a minimum of 32 GB and a maximum of 1536 GB of system memory using LRDIMMs.

  **Note:** The amount of usable memory is reduced depending on the system configuration. A certain amount of memory must be reserved for system resources. To view the total amount of installed memory and the amount of configured memory, run the Setup utility. For additional information, see "Configuring the server" on page 44.
- A minimum of one DIMM must be installed for each microprocessor. For example, you must install a minimum of two DIMMs if the server has two microprocessors installed. However, to improve system performance, install a minimum of four DIMMs for each microprocessor.
- DIMMs in the server must be the same type (RDIMM or LRDIMM) to ensure that the server will operate correctly.

**Notes:**

1. You can install DIMMs for microprocessor 2 as soon as you install microprocessor 2; you do not have to wait until all of the DIMM slots for microprocessor 1 are filled.
2. DIMM slots 13-24 are reserved for microprocessor 2; thus, DIMM slots 13-24 are enabled when microprocessor 2 is installed.

The following illustration shows the location of the DIMM connectors on the system board.

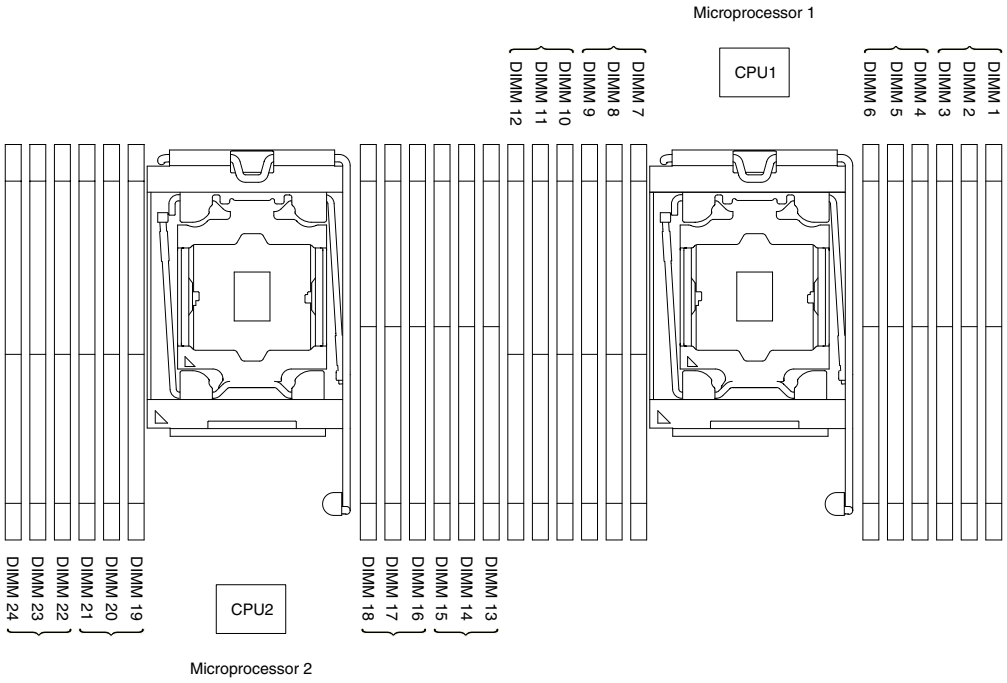


*Figure 94. DIMM connectors location*

**DIMM installation sequence:**

Depending on the server model, the server may come with a minimum of one 4 GB DIMM installed in slot 1. When you install additional DIMMs, install them in the order shown in the following table to optimize system performance.

In general, all four channels on the memory interface for each microprocessor can be populated in any order and have no matching requirements.

*Table 11. Normal mode DIMM installation sequence*

| Number of installed microprocessor | DIMM connector population sequence |
|---|---|
| One microprocessor installed | 1, 4, 9, 12, 2, 5, 8, 11, 3, 6, 7, 10 |
| Two microprocessors installed | 1, 13, 4, 16, 9, 21, 12, 24, 2, 14, 5, 17, 8, 20, 11, 23, 3, 15, 6, 18, 7, 19, 10, 22 |

For optimal performance:

Make sure all four memory channels of each microprocessor are populated. Each memory channels should be populated with the same type and amount of memory per channel. Each microprocessor socket should be populated with the same type and amount of memory per socket. 1DPC (one DIMM per channel) or 2DPC (two DIMM per channel) memory configuration are recommended. Unless there is a need for memory capacity over memory frequency, 3DPC (three DIMMs per channel) configuration is not recommended since 3DPC configuration forces the memory subsystem to run at a lower frequency (1600 MHz).

Please refer to the Understanding and Optimizing Memory Performance for Intel Xeon Processor E5-2600 v3 Series in IBM Flex System, System x, and BladeCenter Platforms white paper for the detail.

**Replacing a memory module:**

Use this information to replace a memory module.

**Procedure**

1. Read the safety information that begins on “Safety” on page vii and “Installation guidelines” on page 283.
2. Turn off the server and peripheral devices and disconnect the power cords and all external cables, if necessary.
3. Remove the top cover (see “Removing the top cover” on page 146).
4. Remove the air baffle (see “Removing the air baffle” on page 148).
5. Carefully open the retaining clips on each end of the DIMM connector and remove the DIMM.

   **Attention:** To avoid breaking the retaining clips or damaging the DIMM connectors, open and close the clips gently.

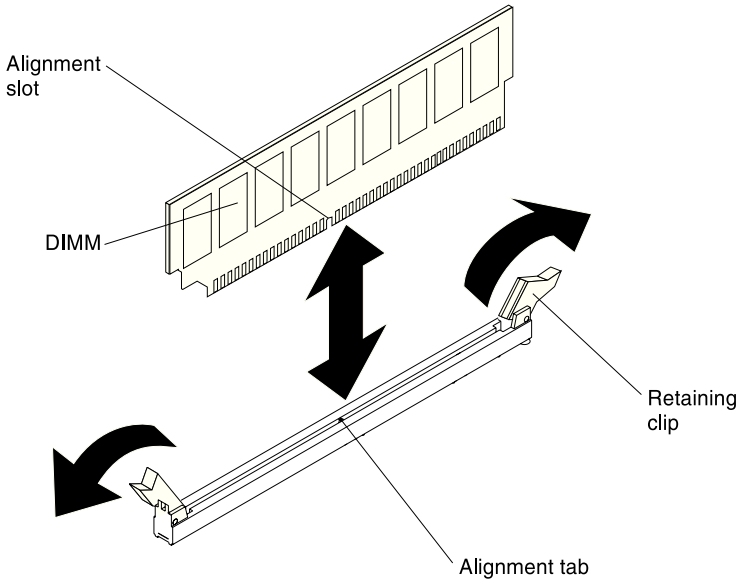


*Figure 95. DIMM installation*

6. Touch the static-protective package that contains the DIMM to any unpainted metal surface on the outside of the server. Then, remove the DIMM from the package.
7. Turn the DIMM so that the alignment slot align correctly with the alignment tab.
8. Insert the DIMM into the connector by aligning the edges of the DIMM with the slots at the ends of the DIMM connector (see System-board optional-device connectors for the locations of the DIMM connectors).
9. Firmly press the DIMM straight down into the connector by applying pressure on both ends of the DIMM simultaneously. The retaining clips snap into the locked position when the DIMM is firmly seated in the connector.

   **Note:** If there is a gap between the DIMM and the retaining clips, the DIMM has not been correctly inserted; open the retaining clips, remove the DIMM, and then reinsert it.
10. Reconnect the power cords and any cables that you removed.
11. Replace the air baffle (see "Replacing the air baffle" on page 149).

    **Note:** Close all the retaining clips even for slots without DIMMs installed before replacing the air baffle.
12. Replace the top cover (see "Replacing the top cover" on page 147).
13. Turn on the peripheral devices and the server.

## Removing the fan cage assembly

Use this information to remove the fan cage assembly.

### About this task

To replace some components or to create working room, you might have to remove the fan cage assembly.

**Note:** To remove or install a fan, it is not necessary to remove the fan cage. See "Removing a hot-swap fan" on page 174 and "Replacing a hot-swap fan" on page 175.

To remove the fan cage assembly, complete the following steps:

### Procedure

1. Read the safety information that begins on "Safety" on page vii and "Installation guidelines" on page 283.
2. Turn off the server and peripheral devices and disconnect the power cords and all external cables.
3. Remove the top cover (see "Removing the top cover" on page 146).
4. **1** Lift the fan cage assembly release latches and rotate the release latches up until the fan cage assembly disengages from the chassis; **2** then, lift the fan cage assembly out of the server.

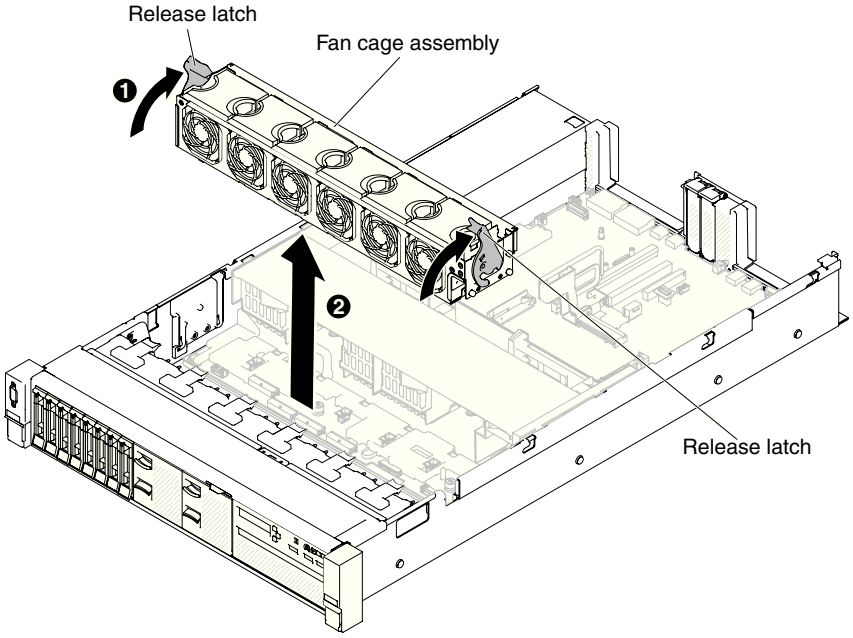


*Figure 96. Fan cage assembly removal*

5. If you are instructed to return the fan cage assembly, follow all of the packaging instructions, and use any packaging materials for shipping that are supplied to you.

## Replacing the fan cage assembly

Use this information to replace the fan cage assembly.

### About this task

To install the fan cage assembly, complete the following steps:

### Procedure

1. Read the safety information that begins on “Safety” on page vii and “Installation guidelines” on page 283.
2. Turn off the server and peripheral devices and disconnect all power cords.
3. Remove the top cover (see “Removing the top cover” on page 146).
4. **1** Align the pins on the fan cage assembly with the slots on both sides of the chassis and lower it into the server.
5. **2** Rotate the fan cage assembly release latches down until the release latches are in the locked position and make sure the assembly is correctly seated into place.

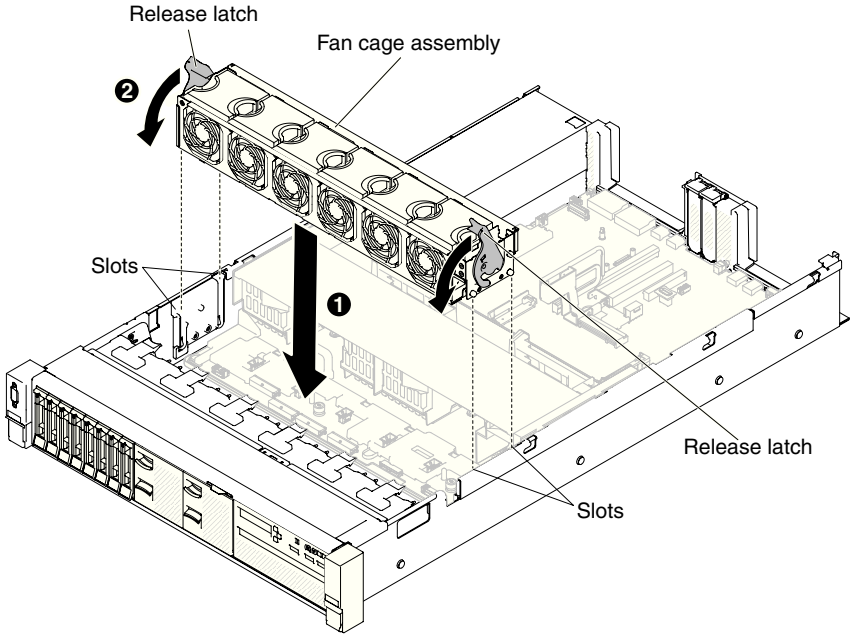


*Figure 97. Fan cage assembly installation*

6. Replace the fans, if needed (see “Replacing a hot-swap fan” on page 175).
7. Replace the top cover (see “Replacing the top cover” on page 147).
8. Slide the server into the rack.
9. Reconnect the power cords and any cables that you removed.
10. Turn on the peripheral devices and the server.

## Removing a hot-swap fan

Use this information to remove a hot-swap fan.

### About this task

**Attention:** To ensure proper server operation, replace a failed hot-swap fan within 30 seconds.

To remove a hot-swap-fan, complete the following steps:

### Procedure

1. Read the safety information that begins on "Safety" on page vii and "Installation guidelines" on page 283.
2. Remove the top cover (see "Removing the top cover" on page 146). The LED on the system board near the connector for the failing dual-motor hot-swap fan will be lit.

   **Attention:** To ensure proper system cooling, do not remove the top cover for more than 30 minutes during this procedure.
3. **1** Pull the fan latch to the left to release the fan from the fan connector and **2** pull the fan out of the fan cage.

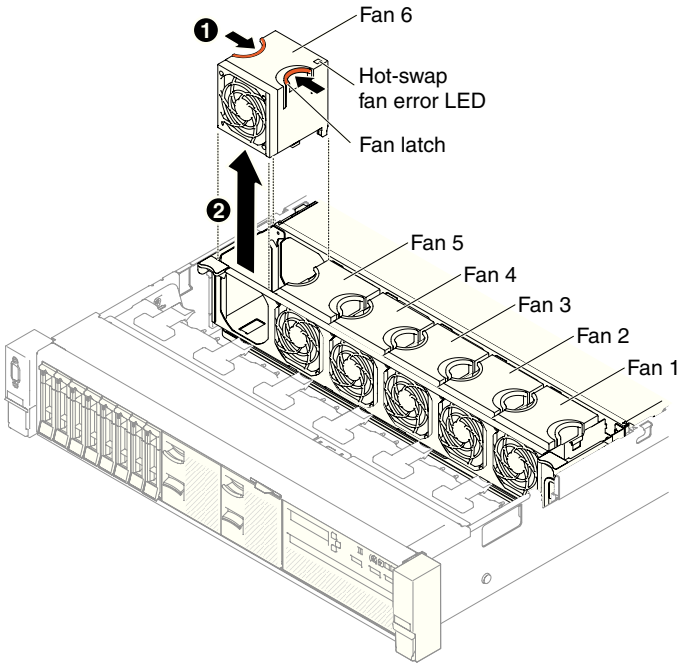


*Figure 98. Fan removal*

   **Attention:** To ensure proper operation, replace a failed hot-swap fan within 30 seconds.
4. If you are instructed to return the fan, follow all of the packaging instructions, and use any packaging materials for shipping that are supplied to you.

## Replacing a hot-swap fan

Use this information to replace a hot-swap fan.

### About this task

For proper cooling, the server requires that all four dual-motor hot-swap fans be installed at all times.

**Attention:** To ensure proper operation, replace a failed hot-swap fan within 30 seconds.

To replace a hot-swap fan, complete the following steps:

### Procedure

1. Read the safety information that begins on "Safety" on page vii and "Installation guidelines" on page 283.
2. Remove the top cover (see "Removing the top cover" on page 146).
3. Touch the static-protective package that contains the new fan to any unpainted metal surface on the server. Then, remove the new fan from the package.
4. Orient the fan over the fan slot in the fan cage so that the fan connector aligns with the connector on the system board.
5. Insert the fan into the fan slot in the fan cage and press it down until it is seated correctly in the slot.

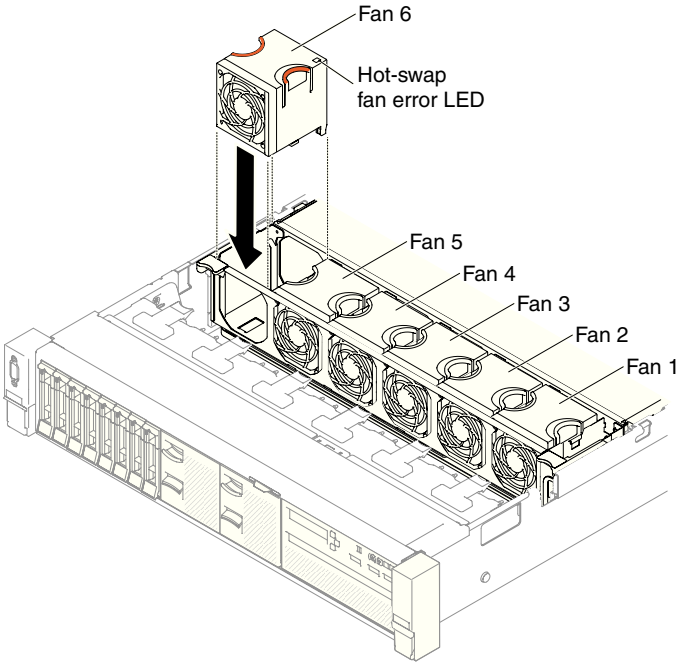


*Figure 99. Fan installation*

**Note:** Make sure that the newly-installed fan aligns horizontally with other correctly-seated fans for proper installation.

6. Replace the top cover (see "Replacing the top cover" on page 147).
7. Slide the server into the rack.

## Removing the media cage

Use this information to remove the media cage.

### About this task

To remove the media cage, complete the following steps:

### Procedure

1. Read the safety information that begins on “Safety” on page vii and “Installation guidelines” on page 283.
2. Turn off the server and peripheral devices and disconnect the power cords and all external cables, if necessary.
3. Remove the top cover (see “Removing the top cover” on page 146).
4. Disconnect the front USB, DVD drive and operator information panel/LCD panel cables from the system board. Please remember the relevant cable routing.

   **Note:** To disconnect the operator information/LCD panel cable, press evenly on the connector first; then, pull the cable out.

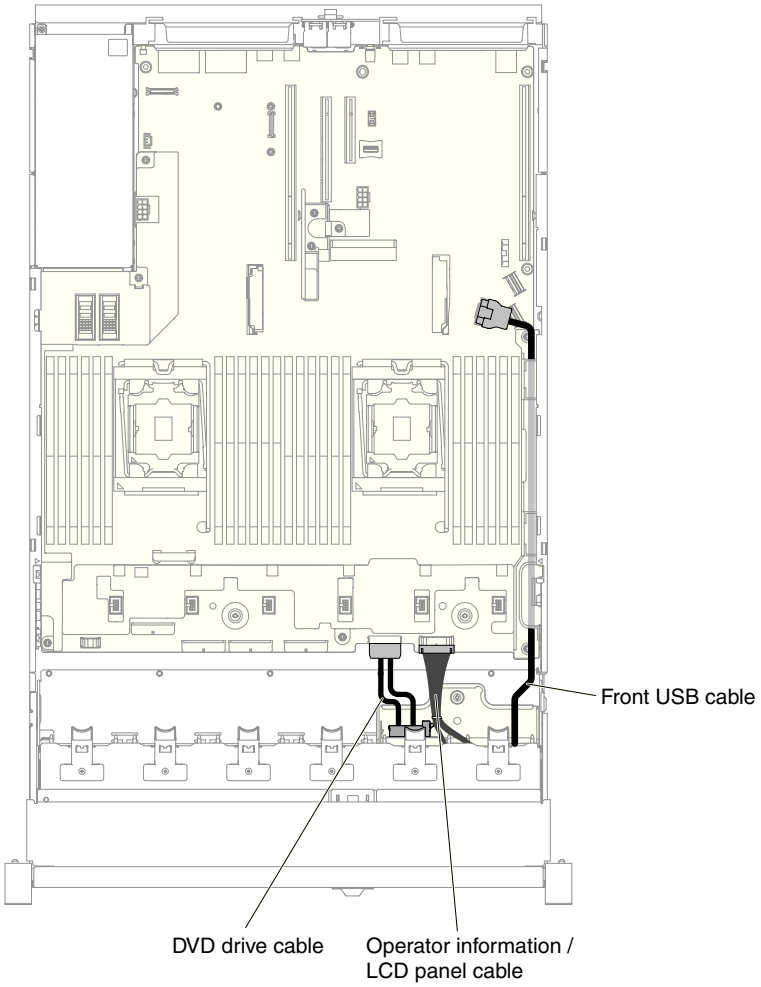


*Figure 100. Cable routing*

5. Loosen the thumbscrew that is used to secure the media cage onto the server.

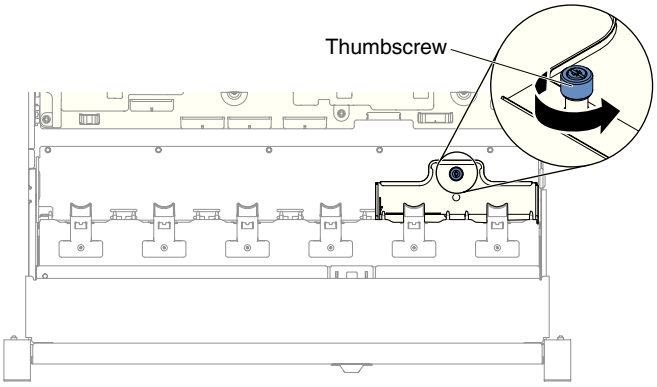


*Figure 101. Thumbscrew*

6. Carefully push the media cage out of the server and set it aside.

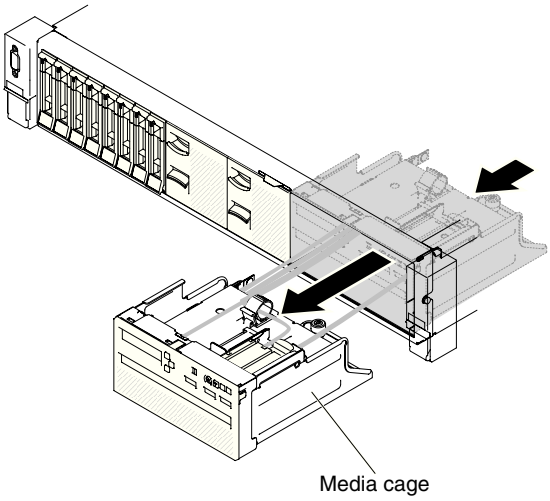


*Figure 102. Media cage removal*

7. If you are instructed to return the media cage, follow all of the packaging instructions, and use any packaging materials for shipping that are supplied to you.

## Replacing the media cage

Use this information to replace the media cage.

### About this task

To install the media cage, complete the following steps:

### Procedure

1. Read the safety information that begins on “Safety” on page vii and “Installation guidelines” on page 283.
2. Turn off the server and peripheral devices and disconnect all power cords.
3. Remove the top cover (see “Removing the top cover” on page 146).
4. Carefully slide the media cage into the server.

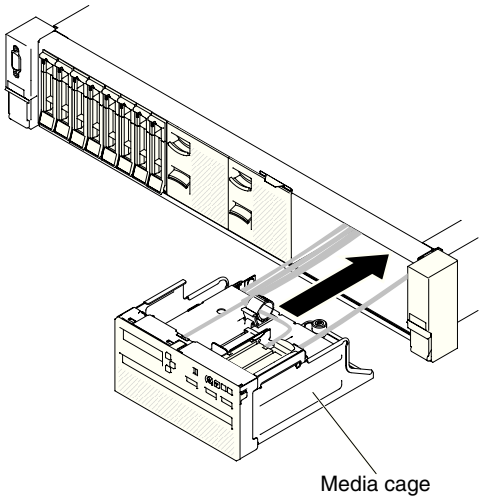


*Figure 103. Media cage installation*

5. Tighten the thumbscrew to secure the media cage onto the server.

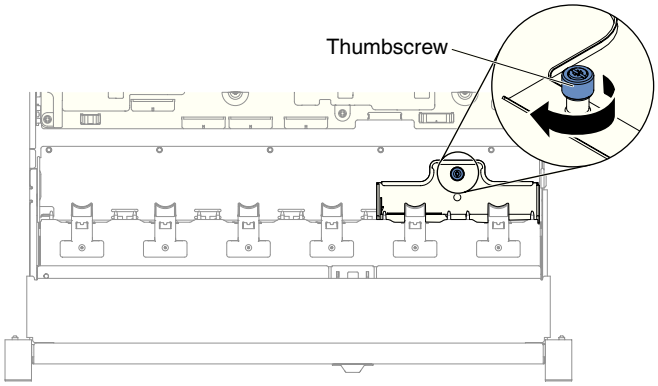


*Figure 104. Thumbscrew*

6. Reconnect the USB, CD/DVD and operator information/LCD panel cables to the system board first; then, route the cables as the following illustration. Remember to insert the cables into the cable clip for proper routing.

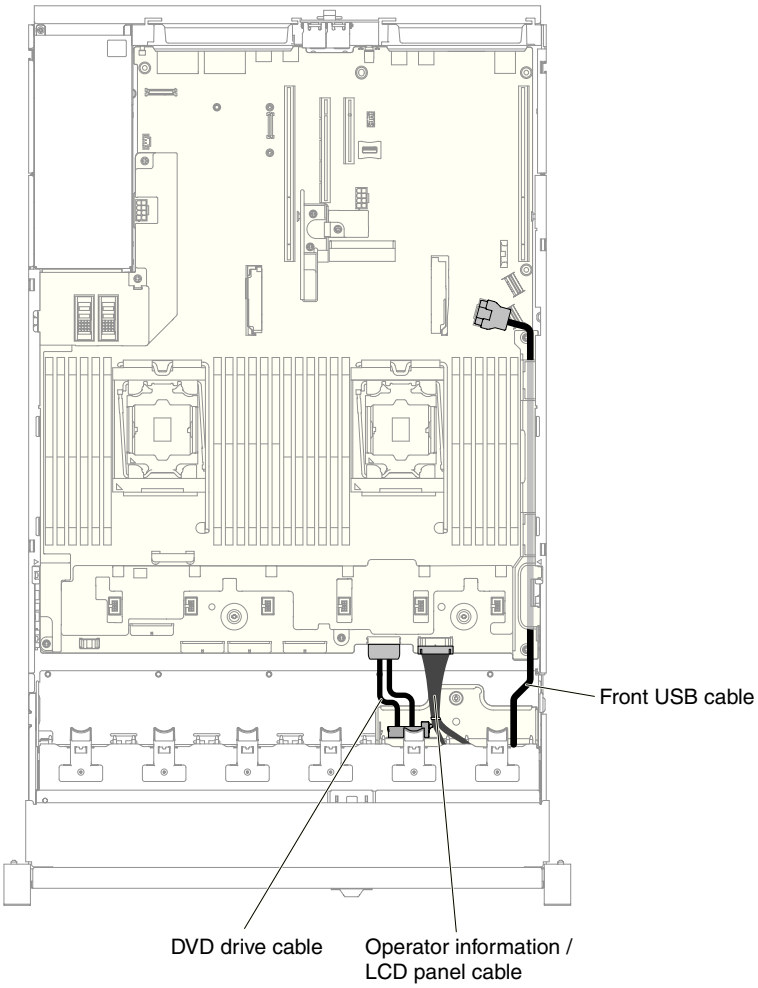


*Figure 105. Cable routing*

7. Replace the top cover (see "Replacing the top cover" on page 147).
8. Slide the server into the rack.
9. Reconnect the power cords and any cables that you removed.
10. Turn on the peripheral devices and the server.

## Removing a riser-card assembly

Use this information to remove a riser-card assembly.

### About this task

See http://www.ibm.com/systems/info/x86servers/serverproven/compat/us/ for a list of riser-card assemblies that you can use with the server.

To remove a riser-card assembly, complete the following steps:

### Procedure

1. Read the safety information that begins on page "Safety" on page vii and "Installation guidelines" on page 283.
2. Turn off the server and peripheral devices, and disconnect the power cord and all external cables.
3. Remove the top cover (see "Removing the top cover" on page 146).
4. Grasp the blue touch-points on the front and the rear side of the riser-card assembly; then, lift it up to remove it from the server. Place the riser-card assembly on a flat, static-protective surface.
   - For half-length and low profile adapters

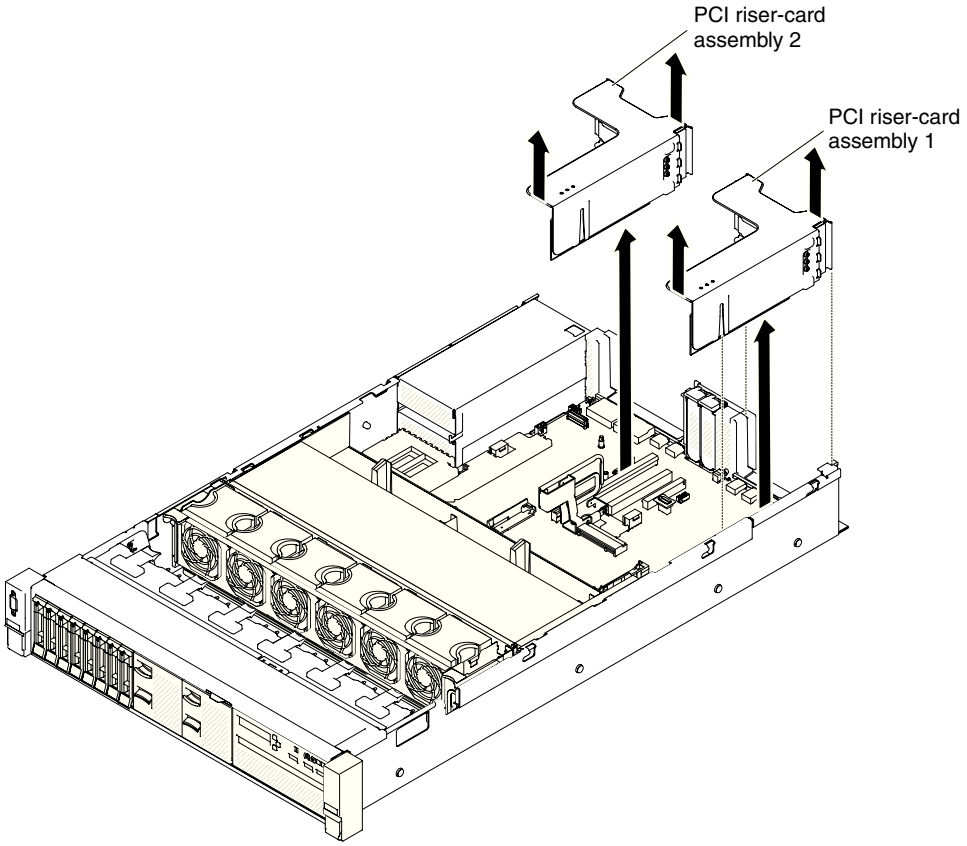


*Figure 106. Riser-card assembly removal - half-length and low profile adapters*

   - For full-height, full-length adapters

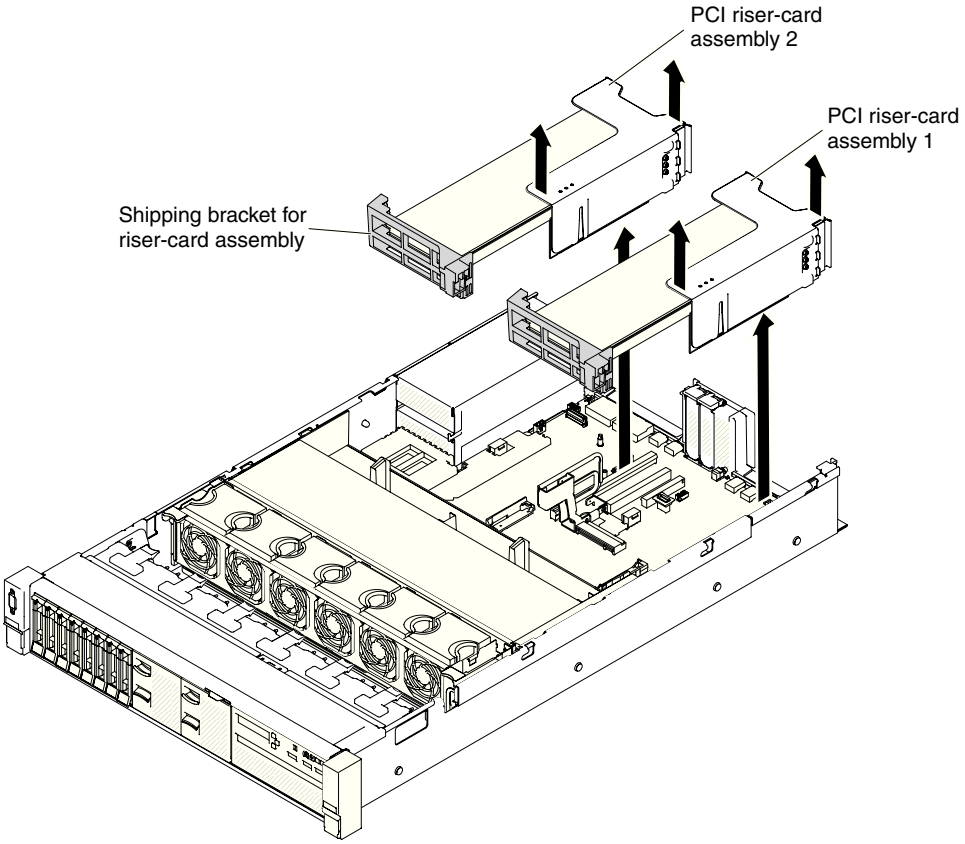


*Figure 107. Riser-card assembly removal - full-height, full-length adapters*

5. If you are instructed to return the riser-card assembly, follow all of the packaging instructions, and use any packaging materials for shipping that are supplied to you.

## Replacing a riser-card assembly

Use this information to replace a riser-card assembly.

### About this task

The server provides two riser-card slots on the system board. The following information indicates the riser-card slots:

- PCI riser slot 1 (the farthest slot from the power supplies). You must install a riser-card assembly in slot 1 with microprocessor 1.
- PCI riser slot 2 (the closest slot to the power supplies). You must install a riser-card assembly in slot 2 with microprocessor 2.
- PCI riser-card brackets must be installed even if you do not install an adapter.

To install a riser-card assembly, complete the following steps:

### Procedure

1. Read the safety information that begins on “Safety” on page vii and “Installation guidelines” on page 283.
2. Turn off the server and peripheral devices and disconnect all power cords.
3. Remove the top cover (see “Removing the top cover” on page 146).

4. Reinstall any adapters and reconnect any internal cables you might have removed in other procedures (see “Replacing an adapter” on page 190 and “Internal cable routing and connectors” on page 131).
5. Align the riser-card assembly with the selected PCI connector on the system board and align it with the slots on the chassis; then, lower it into the server and press down firmly until the riser-card assembly is seated correctly in the connector on the system board.
   - For half-length and low profile adapters

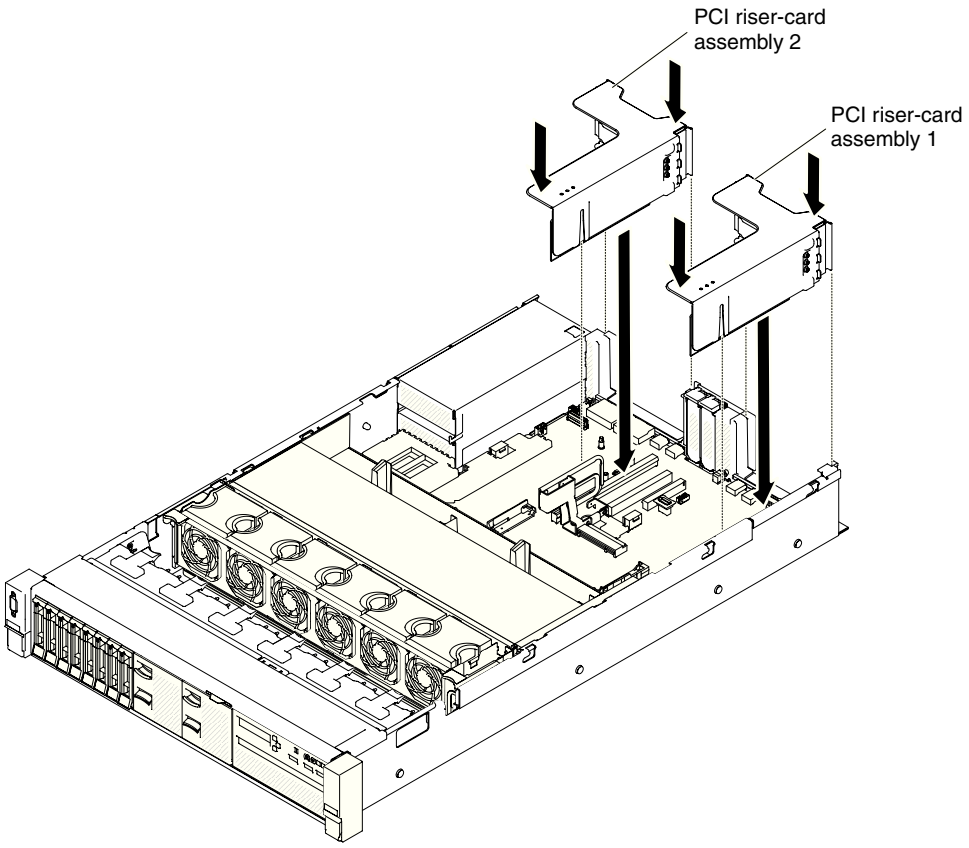


*Figure 108. Riser-card assembly installation - half-length and low profile adapters*

   - For full-height, full-length adapters

     **Note:** Shipping brackets are only included in the server that is pre-configured with full-height, full-length adapters

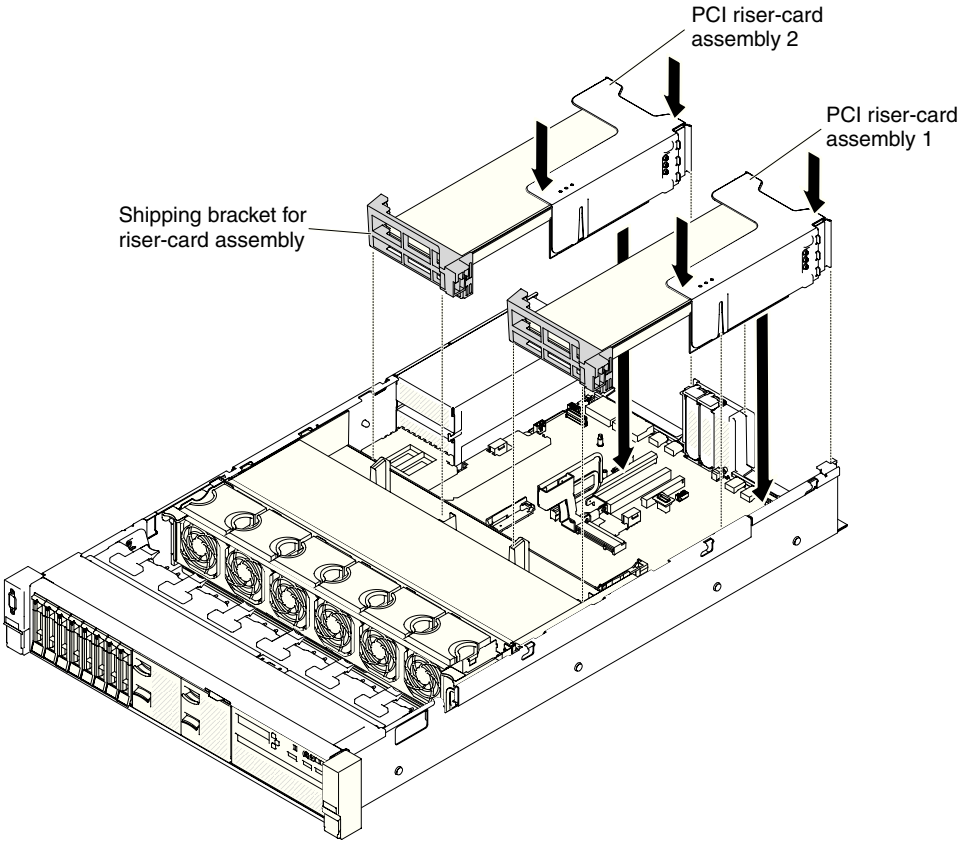


*Figure 109. Riser-card assembly installation - full-height, full-length adapters*

6. Replace the top cover (see "Replacing the top cover" on page 147).
7. Slide the server into the rack.
8. Reconnect the power cords and any cables that you removed.
9. Turn on the peripheral devices and the server.

## Removing the dedicated slotless RAID controller

Use this information to remove the dedicated slotless RAID controller.

### About this task

The dedicated slotless RAID controller can be installed in the dedicated connector on the system board (see "System-board internal connectors" on page 29 for the location of the connectors).

To remove the dedicated slotless RAID controller, complete the following steps:

### Procedure

1. Read the safety information that begins on "Safety" on page vii and "Installation guidelines" on page 283.
2. Turn off the server and peripheral devices and disconnect the power cords and all external cables, if necessary.
3. Remove the top cover (see "Removing the top cover" on page 146).
4. Disconnect the signal cables from the connectors on the controller and note their locations.

5. **1** Press the retention tabs away from the controller; then, slightly lift up the rear of the controller, and **2** pull it out of the connector on the system board.

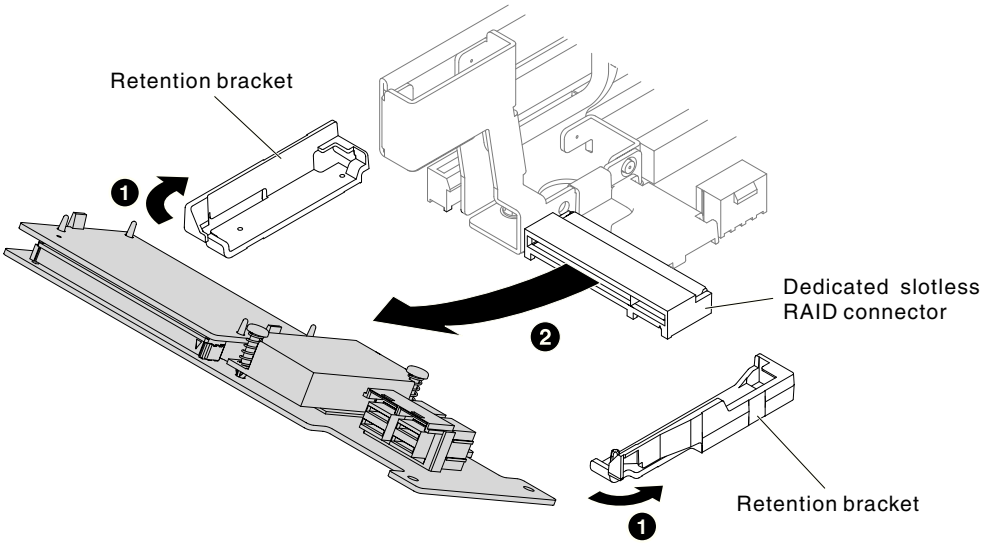


*Figure 110. Dedicated slotless RAID controller removal*

6. If you are instructed to return the dedicated slotless RAID controller, follow all of the packaging instructions, and use any packaging materials for shipping that are supplied to you.

## Replacing the dedicated slotless RAID controller

Use this information to replace the dedicated slotless RAID controller.

### About this task

The dedicated slotless RAID controller can be installed in the dedicated connector on the system board (see "System-board internal connectors" on page 29 for the location of the connectors).

To replace the dedicated slotless RAID controller, complete the following steps:

### Procedure

1. Read the safety information that begins on "Safety" on page vii and "Installation guidelines" on page 283.
2. Turn off the server and peripheral devices and disconnect the power cords and all external cables, if necessary.
3. Remove the top cover (see "Removing the top cover" on page 146).
4. If you are installing a new or replacement controller, touch the static-protective package that contains the new controller to any unpainted metal surface on the server. Then, remove the new controller from the package.
5. Align the controller so that the keys align correctly with the connector on the system board.
6. Insert the controller into the RAID connector on the system board until it is firmly seated. The retention brackets secure the controller in place when the controller is firmly seated into the connector.

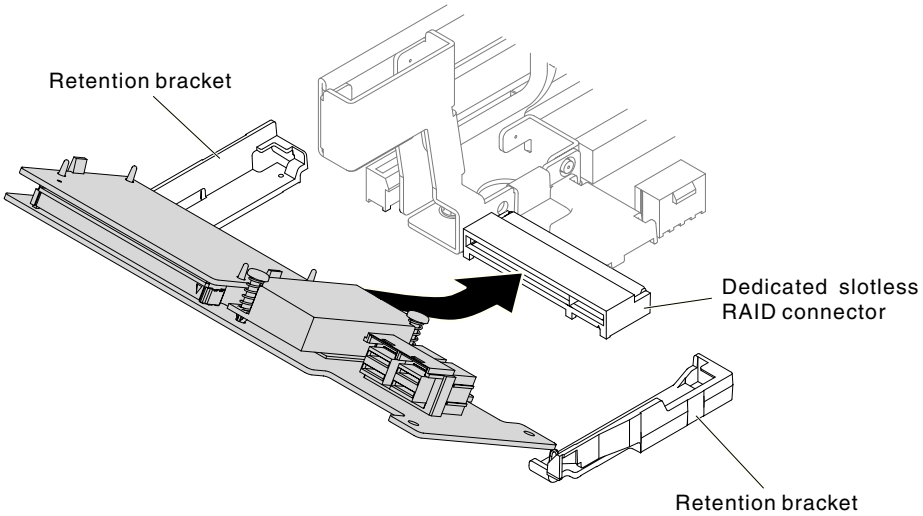


*Figure 111. Dedicated slotless RAID controller installation*

7. Route the backplane signal cables. (See "2.5-inch hard disk drive cable connection" on page 133 and "3.5-inch hard disk drive cable connection" on page 142).
8. Connect the signal cables to the controller.
9. Reconnect any cables that you removed.
10. Replace the top cover (see "Replacing the top cover" on page 147).
11. Slide the server into the rack.
12. Reconnect the power cords and any cables that you removed.

## Removing an adapter

Use this information to remove an adapter.

**Removing an adapter in a riser-card assembly:**

Use this information to remove an adapter.

**About this task**

This topic describes removing an adapter from a expansion slot in a riser-card assembly. These instructions apply to PCI adapters such as video graphic adapters and network adapters.

The following illustration shows the locations of the adapter expansion slots from the rear of the server.

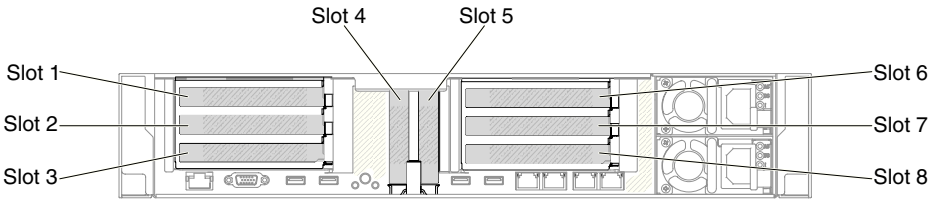


*Figure 112. PCI riser-card adapter expansion slot locations*

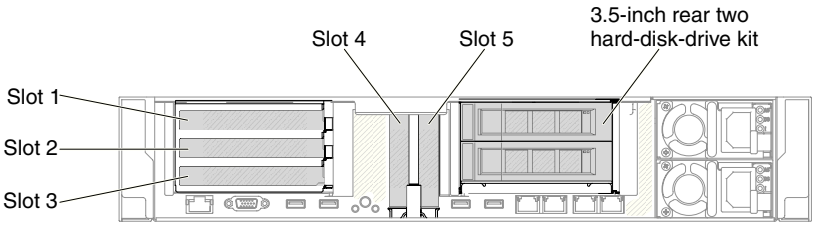


*Figure 113. PCI riser-card adapter expansion slot locations*

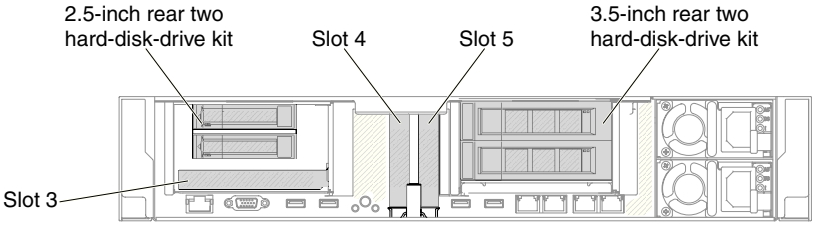


*Figure 114. PCI riser-card adapter expansion slot locations*

The following table describes the maximal card dimension supported in each slot.

*Table 12. The maximal card dimension supported in each slot*

| Riser-card assembly | Slot number | The maximal card dimension supported |
|---|---|---|
| **Riser-card assembly 1** | 1 | Full height, up to full length |
| | 2 | Full height, up to full length |
| | 3 | Full height, half length |
| | 4 | Low-profile |
| | 5 | Low-profile |
| **Riser-card assembly 2** | 6 | Full height, up to full length |
| | 7 | Full height, up to full length |
| | 8 | Full height, half length |

**Note:** If you are replacing a high power graphics adapter, you might need to disconnect the internal power cable from the system board before removing the adapter.

To remove an adapter, complete the following steps:

**Procedure**

1. Read the safety information that begins on “Safety” on page vii and “Installation guidelines” on page 283.
2. Turn off the server and peripheral devices and disconnect all power cords; then, remove the top cover (see “Removing the top cover” on page 146).
3. Press down on the left and right side latches and slide the server out of the rack enclosure until both slide rails lock; then, remove the top cover (see “Removing the top cover” on page 146).
4. Remove the riser-card assembly that contains the adapter (see Removing a riser-card assembly).

- If you are removing an adapter from PCI expansion slot 1, 2, or 3, remove riser-card assembly 1.
- If you are removing an adapter from PCI expansion slot 6, 7 or 8, remove riser-card assembly 2.

5. Disconnect any cables from the adapter (make note of the cable routing, in case you reinstall the adapter later).
6. If you are removing a full-height, full-length adapter, pull the shipping bracket out of the riser-card assembly.

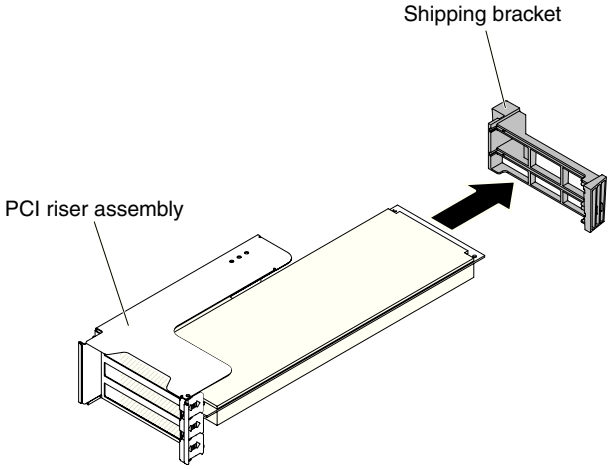


*Figure 115. Full-height, full-length adapter*

7. **1** Slide the retention bracket; then, **2** rotate it to the open position.
8. Remove the screws if present. These screws can be fastened to the side of the riser-card assembly for storage if needed.

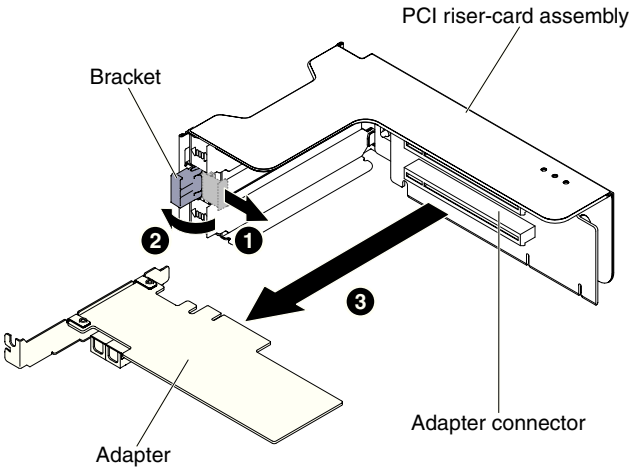


*Figure 116. Adapter removal*

9. Carefully grasp the adapter by its top edge or upper corners, and pull the adapter from the PCI expansion slot.
10. If you are instructed to return the adapter, follow all packaging instructions, and use any packaging materials for shipping that are supplied to you.

**Removing an adapter in PCI expansion slot 4 or slot 5:**

Use this information to remove an adapter in PCI expansion slot 4 or slot 5.

**About this task**

To remove an adapter in PCI expansion slot 4 or slot 5, complete the following steps:

**Procedure**

1. Read the safety information that begins on "Safety" on page vii and "Installation guidelines" on page 283.
2. Turn off the server and peripheral devices and disconnect all power cords; then, remove the top cover (see "Removing the top cover" on page 146).
3. Press down on the left and right side latches and slide the server out of the rack enclosure until both slide rails lock; then, remove the top cover (see "Removing the top cover" on page 146).
4. Disconnect any cables from the adapter (make note of the cable routing, in case you reinstall the adapter later).
5. Rotate the bracket to the open position.
6. Remove the screws if present.
7. Carefully grasp the adapter by its top edge or upper corners, and pull the adapter out of the connector.

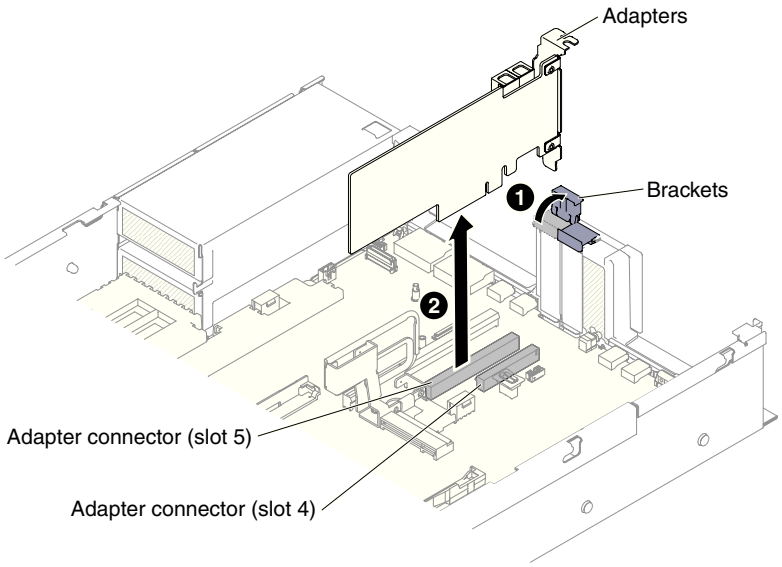


*Figure 117. Adapter removal*

8. If you are instructed to return the adapter, follow all packaging instructions, and use any packaging materials for shipping that are supplied to you.

**Removing an adapter in the rear two hard-disk-drive kit:**

Use this information to remove an adapter in the rear two hard-disk-drive kit.

**About this task**

To remove an adapter in the rear two hard-disk-drive kit, complete the following steps:

**Procedure**

1. Read the safety information that begins on "Safety" on page vii and "Installation guidelines" on page 283.
2. Turn off the server and peripheral devices and disconnect all power cords; then, remove the top cover (see "Removing the top cover" on page 146).
3. Press down on the left and right side latches and slide the server out of the rack enclosure until both slide rails lock; then, remove the top cover (see "Removing the top cover" on page 146).
4. Remove the rear two hard-disk-drive kit that contains the adapter (see "Removing the rear two hard-disk-drive kit" on page 200).
   - If you are removing an adapter from PCI expansion slot 3, remove rear two hard-disk-drive kit 1.
   - If you are removing an adapter from PCI expansion slot 8, remove rear two hard-disk-drive kit 2.
5. Disconnect any cables from the adapter (make note of the cable routing, in case you reinstall the adapter later).
6. **1** Slide the retention bracket; then, **2** rotate it to the open position.

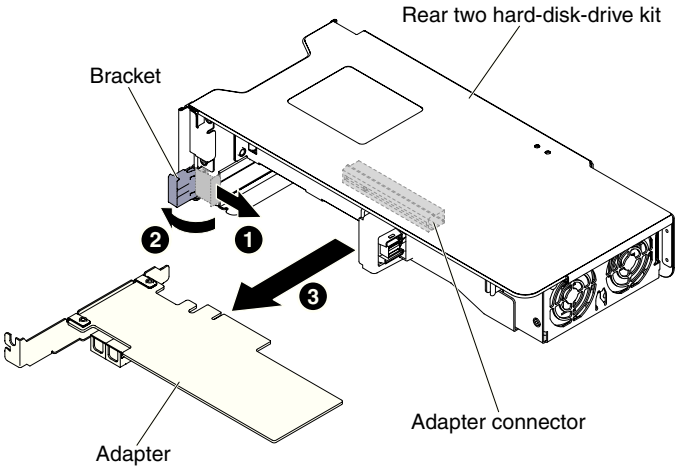


*Figure 118. Adapter removal*

7. Remove the screws if present. These screws can be fastened to the side of the riser-card assembly for storage if needed.
8. **3** Carefully grasp the adapter by its top edge or upper corners, and pull the adapter out of the rear two hard-disk-drive kit.
9. If you are instructed to return the adapter, follow all packaging instructions, and use any packaging materials for shipping that are supplied to you.

## Replacing an adapter

Use this information to replace an adapter.

**Replacing an adapter in a riser-card assembly:**

Use this section to replace an adapter in a riser-card assembly.

**About this task**

The following illustration shows the locations of the adapter expansion slots from the rear of the server.

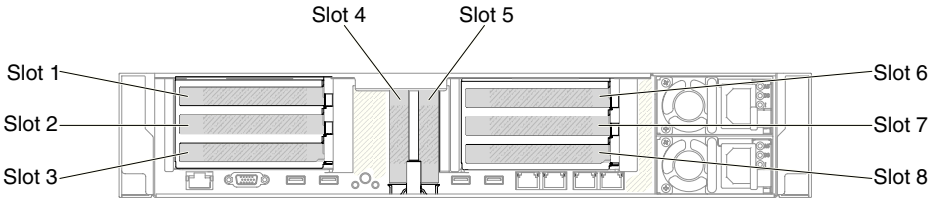


*Figure 119. PCI riser-card adapter expansion slot locations*

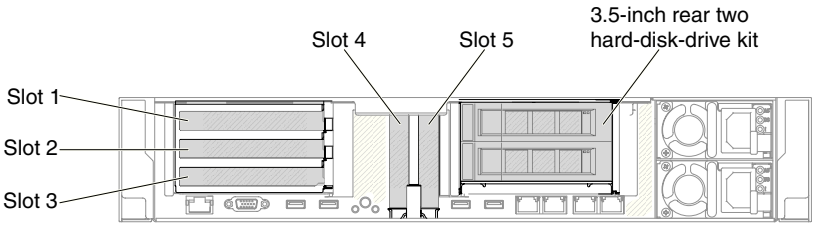


*Figure 120. PCI riser-card adapter expansion slot locations*

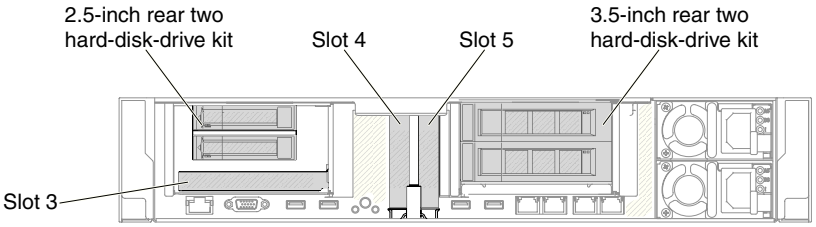


*Figure 121. PCI riser-card adapter expansion slot locations*

The following table describes the maximal card dimension supported in each slot.

*Table 13. The maximal card dimension supported in each slot*

| Riser-card assembly | Slot number | The maximal card dimension supported |
|---|---|---|
| **Riser-card assembly 1** | 1 | Full height, up to full length |
| | 2 | Full height, up to full length |
| | 3 | Full height, half length |
| | 4 | Low-profile |
| | 5 | Low-profile |

*Table 13. The maximal card dimension supported in each slot (continued)*

| Riser-card assembly | Slot number | The maximal card dimension supported |
|---|---|---|
| **Riser-card assembly 2** | 6 | Full height, up to full length |
| | 7 | Full height, up to full length |
| | 8 | Full height, half length |

The following notes describe the types of adapters that the server supports and other information that you must consider when you install an adapter:

- Locate the documentation that comes with the adapter and follow those instructions in addition to the instructions in this section.
- The server provides two internal SAS connectors and two SAS/SATA RAID riser-card slots on the system board. See System-board optional-device connectors for the location of the internal SAS/SATA RAID connector and riser-card slots. You can replace the IBM ServeRAID SAS/SATA adapter with an optional IBM ServeRAID SAS/SATA adapter in the slot. For configuration information, see the ServeRAID documentation at http://www.ibm.com/supportportal/.
- Do not set the maximum digital video adapter resolution above 1600 x 1200 at 75 Hz for an LCD monitor. This is the highest resolution that is supported for any add-on video adapter that you install in the server.
- Read the following table before installing memory modules when any Quadro adapters is installed.

*Table 14. NVIDIA Quadro video adapter configurations*

| Description | Supported maximum total memory size |
|---|---|
| Grid K1 adapter | 1 TB |
| Grid K2 adapter | 1 TB |
| Tesla K40 adapter | 1 TB |

- Do not install the following adapters in the slot 3 and the slot 8.

*Table 15. Non-supported adapters in the slot 3 and the slot 8*

| Adapter description | Option part number | FRU part number |
|---|---|---|
| N2215 SAS/SATA HBA for IBM System x | 47C8675 | 47C8676 |
| N2215 SAS/SATA HBA for IBM System x | 00AE912 | 00AE914 |
| ServeRAID M5225-2GB SAS/SATA Controller for IBM System x | 00AE938 | 00AE939 |
| Emulex Dual Port 10GbE SFP+ VFA IIIr for IBM System x | 00D8540 | 00D8543 |
| Mellanox ConnectX-3 40GbE/ FOR IB VPI Adapter for IBM System x | 00D9550 | 00D9552 |
| Broadcom NetXtreme 2x10GbE Base T Adapter for IBM System x | 44T1370 | 00E2714 |

*Table 15. Non-supported adapters in the slot 3 and the slot 8 (continued)*

| Adapter description | Option part number | FRU part number |
|---|---|---|
| Qlogic 8200 Dual PORT 10GbE SFP+ Adapter for IBM System x | 90Y4600 | 90Y4605 |
| Broadcom NetXtrme Dual Port 10GbE SPG+ Adapter for IBM System x | 94Y5180 | 94Y5182 |
| Mellanox ConnectX-3 10GbE Adapter for IBM System x | 00D9690 | 00D9692 |
| Intel x520 Dual Port 10GbE SFP+ Adapter for IBM System x | 49Y7960 | 49Y7962 |
| Emulex VFA5 2x10GbE SFP+ Adapter for IBM System x | 00JY830 | 00JY833 |

- Any high-definition video-out connector or stereo connector on any add-on video adapter is not supported
- When you install any PCI adapter, the power cords must be disconnected from the power source before you remove the PCI Express riser-card assembly. Otherwise, the active power management event signal will be disabled by the system-board logic, and the Wake on LAN feature might not work. However, after the server is powered-on locally, the active power manager active power management event signal will be enabled by the system-board logic.
- **Attention:**
  1. Do not install over 3 ServeRAID M1215 SAS/SATA controllers in one system.
  2. Do not install the NVIDIA Grid Kx/Mxx, the NVIDIA Quadro Kxxxx or the NVIDIA Tesla Kxx adapter options in systems containing 1TB of system memory or more. If these options are installed in systems with 1TB of memory or more, it might cause undetected data corruption and system instability. These options are only supported in systems containing less than 1TB of memory. For more information, see RETAIN tip H213010 at http://www.ibm.com/support/entry/myportal/docdisplay?lndocid=migr-5096047.

To replace an adapter, complete the following steps:

**Procedure**

1. Read the safety information that begins on "Safety" on page vii and "Installation guidelines" on page 283.
2. Turn off the server and peripheral devices and disconnect the power cords and all external cables.
3. Remove the server top cover (see "Removing the top cover" on page 146).
4. Determine which expansion slot you will use for the adapter. If you are installing an adapter in PCI expansion slot 1, 2, or 3, remove riser-card assembly 1; if you are installing an adapter in expansion slot 6, 7, or 8, remove riser-card assembly 2. See Removing a riser-card assembly
5. **1** Slide the retention bracket; then, **2** rotate it to the open position.
6. Slide the expansion-slot cover out of the riser-card assembly expansion slot.
7. Align the adapter with the PCI connector on the riser card and press the adapter firmly into the PCI connector on the riser card.

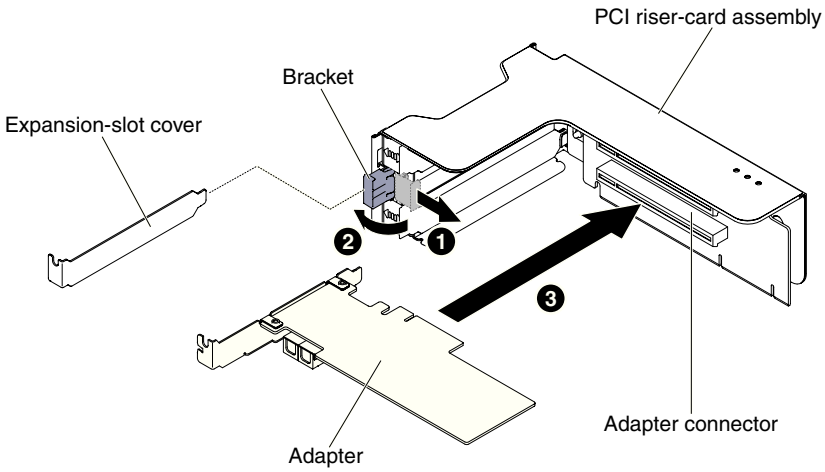


*Figure 122. Adapter installation*

8. Rotate the retention latch to the close position.

   **Note:** Fasten the screw on the retention latch to secure the adapter.
9. If you are installing a full-height, full-length adapter, insert the shipping brackets.

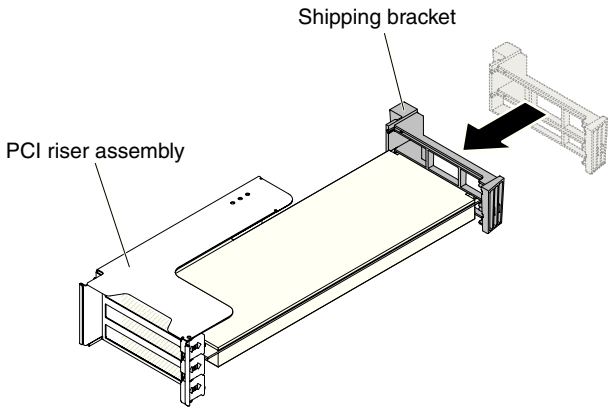


*Figure 123. Full-height, full-length adapter*

10. Connect any required cables to the adapter.

    **Attention:**

    - When you route cables, do not block any connectors or the ventilated space around any of the fans.
    - Make sure that cables are not routed on top of components that are under the riser-card assembly.
    - Make sure that cables are not pinched by the server components.
11. Align the riser-card assembly with the selected PCI connector on the system board and align it with the slots on the chassis; then, lower it into the server and press down firmly until the riser-card assembly is seated correctly in the connector on the system board.
    - For half-length and low profile adapters

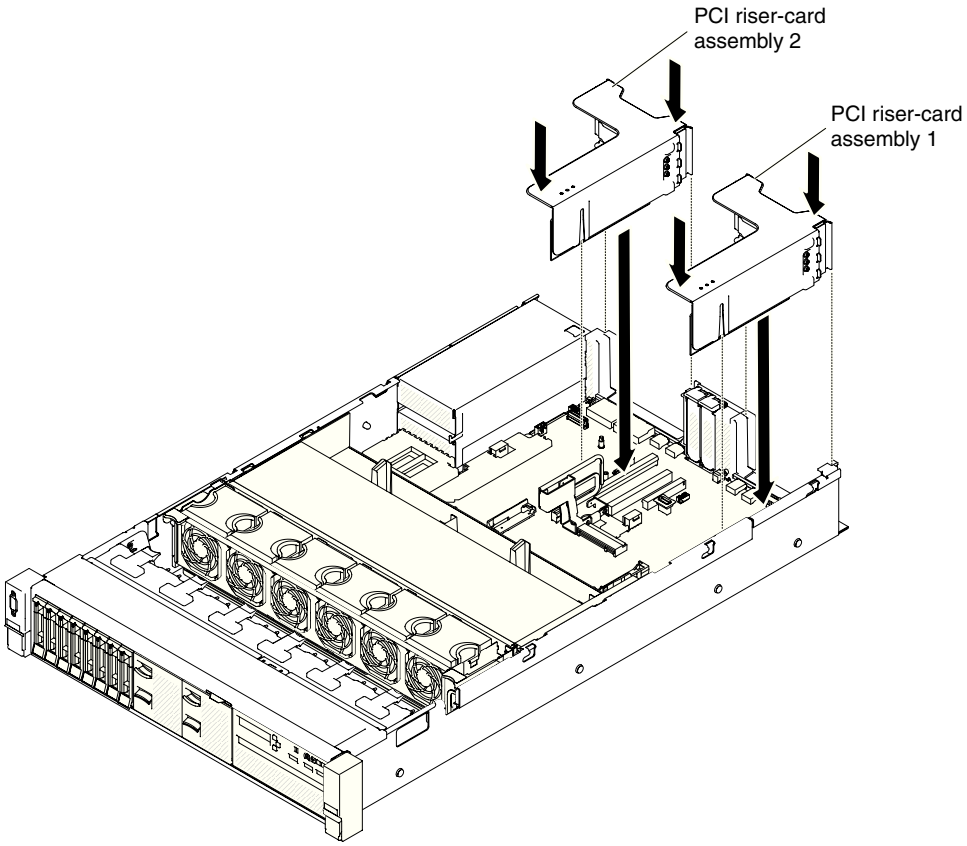


*Figure 124. Riser-card assembly installation - half-length and low profile adapters*

- For full-height, full-length adapters

  **Note:** Shipping brackets are only included in the server that is pre-configured with full-height, full-length adapters

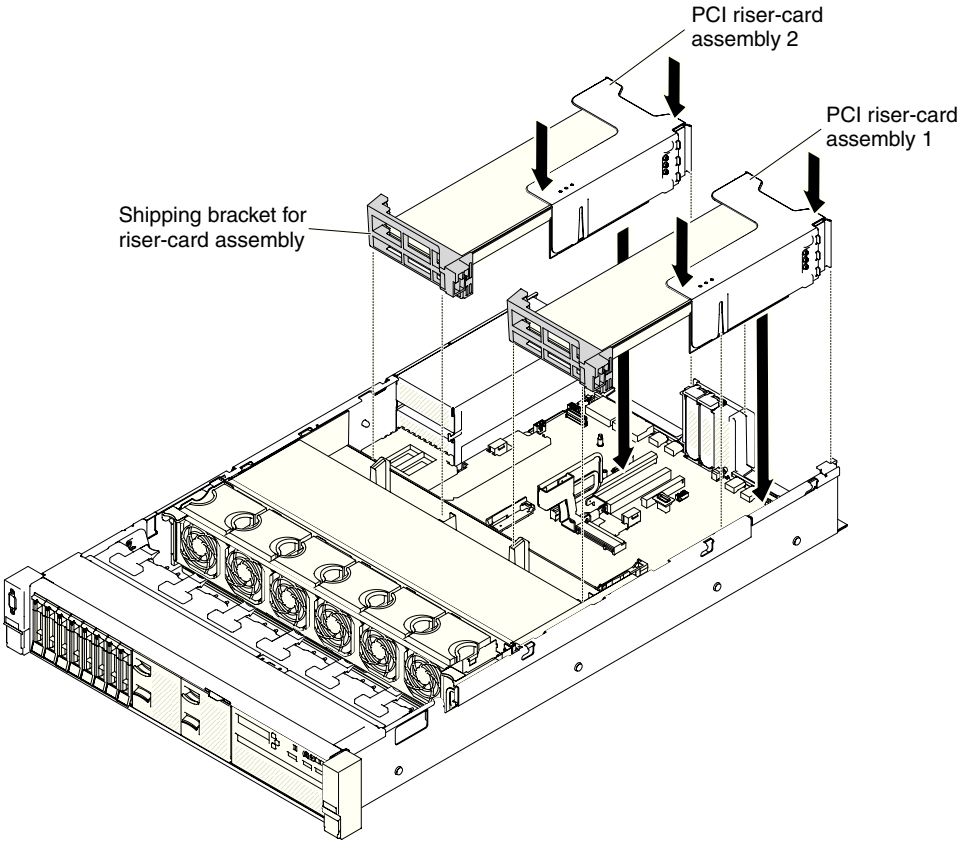


*Figure 125. Riser-card assembly installation - full-height, full-length adapters*

12. Perform any configuration tasks that are required for the adapter.
13. Reinstall the top cover (see "Replacing the top cover" on page 147).
14. Slide the server into the rack.
15. Reconnect the power cords and any cables that you removed.
16. Turn on the peripheral devices and the server.

**Replacing an adapter in PCI expansion slot 4 or slot 5:**

Use this section to replace an adapter in PCI expansion slot 4 or slot 5.

**About this task**

To replace an adapter, complete the following steps:

**Procedure**

1. Read the safety information that begins on "Safety" on page vii and "Installation guidelines" on page 283.
2. Turn off the server and peripheral devices and disconnect the power cords and all external cables.
3. Remove the server top cover (see "Removing the top cover" on page 146).
4. **1** Rotate the bracket to the open position.
5. Slide the expansion-slot cover out of the server.

6. **2** Align the adapter with the PCI connector on the system board and press the adapter firmly into the PCI connector on the system board.

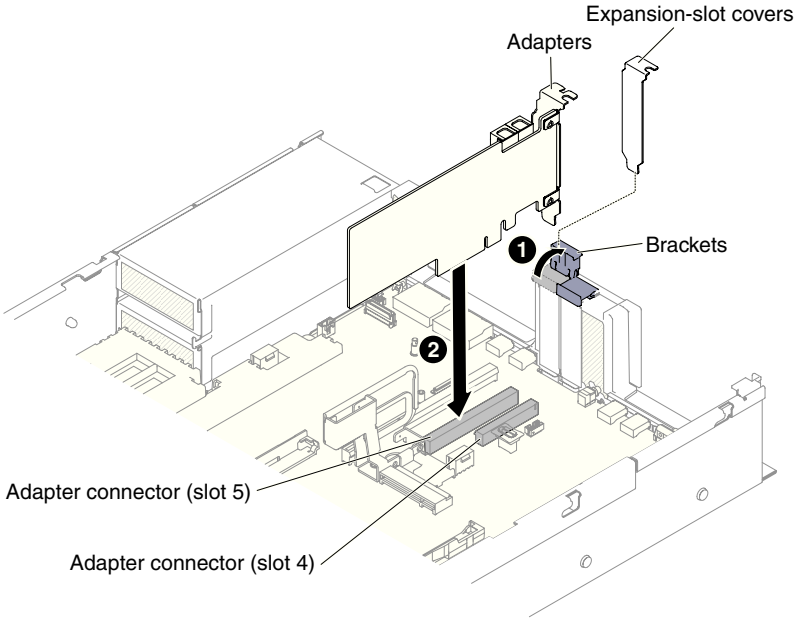


*Figure 126. Adapter installation*

7. Rotate the retention bracket to the close position.
8. Connect any required cables to the adapter.

   **Attention:**

   - When you route cables, do not block any connectors or the ventilated space around any of the fans.
   - Make sure that cables are not routed on top of components that are under the riser-card assembly.
   - Make sure that cables are not pinched by the server components.
9. Perform any configuration tasks that are required for the adapter.
10. Reinstall the top cover (see "Replacing the top cover" on page 147).
11. Slide the server into the rack.
12. Reconnect the power cords and any cables that you removed.
13. Turn on the peripheral devices and the server.

**Replacing an adapter in the rear two hard-disk-drive kit:**

Use this information to replace an adapter in the rear two hard-disk-drive kit.

**About this task**

To install an adapter, complete the following steps:

**Procedure**

1. Read the safety information that begins on "Safety" on page vii and "Installation guidelines" on page 283.
2. Turn off the server and peripheral devices and disconnect the power cords and all external cables.
3. Remove the server top cover (see "Removing the top cover" on page 146).
4. Remove the rear two hard-disk-drive kit (see "Removing the rear two hard-disk-drive kit" on page 200).
5. **1** Slide the retention bracket; then, **2** rotate it to the open position.
6. Align the adapter with the slot on the rear two hard-disk-drive kit.
7. **3** Press the adapter firmly into the slot on the rear two hard-disk-drive kit.

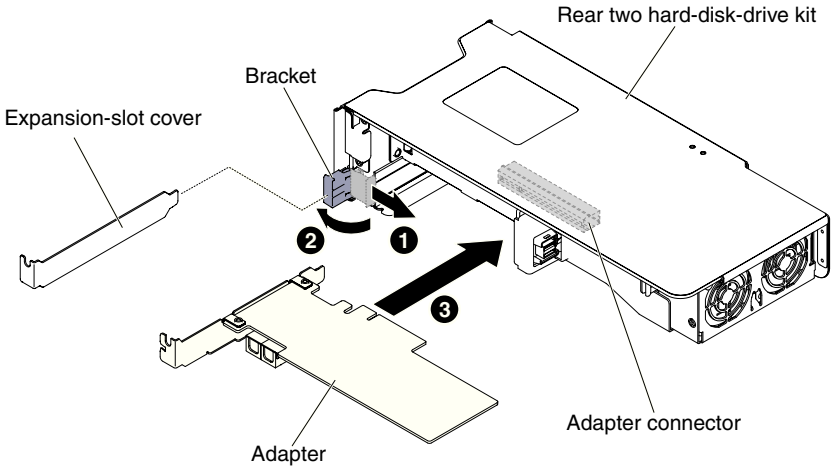


*Figure 127. Adapter installation*

8. Connect any required cables to the adapter.

   **Attention:**

   - When you route cables, do not block any connectors or the ventilated space around any of the fans.
   - Make sure that cables are not routed on top of components under the rear two hard-disk-drive kit.
   - Make sure that cables are not pinched by the server components.
9. Perform any configuration tasks that are required for the adapter.
10. Replace the rear two hard-disk-drive kit in the server (see "Replacing the rear two hard-disk-drive kit" on page 202).
11. Reinstall the top cover (see "Replacing the top cover" on page 147).
12. Slide the server into the rack.
13. Reconnect the power cords and any cables that you removed.
14. Turn on the peripheral devices and the server.

## Removing a RAID adapter battery/flash power module

Use this information to remove a RAID adapter battery/flash power module.

### About this task

If a RAID adapter battery / flash power module is installed near the fan cage and you need to replace it, complete the following steps:

### Procedure

1. Read the safety information that begins on "Safety" on page vii and "Installation guidelines" on page 283.
2. Turn off the server and peripheral devices and disconnect all power cords.
3. Remove the top cover (see "Removing the top cover" on page 146).
4. Disconnect the battery/flash power module cable from the RAID adapter battery/flash power module connector.
5. If the flash power modules are located behind the full-height, full-length adapters, you need to remove the riser-card assemblies first. See "Removing an adapter in a riser-card assembly" on page 185.
6. **1** Press the release tab and **2** grasp the battery/flash power module out of the holder.

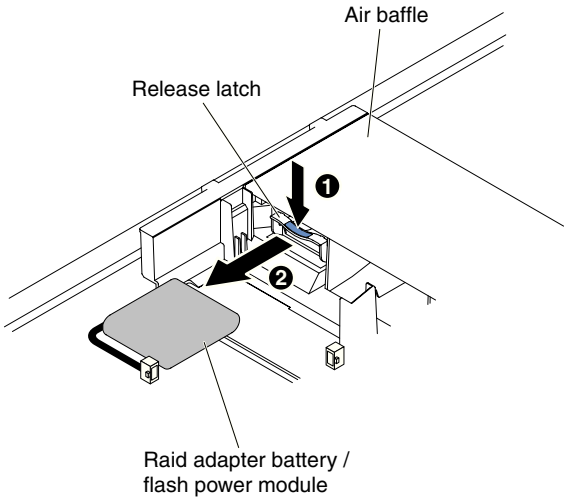


*Figure 128. RAID adapter battery/flash power module removal*

7. If you are instructed to return the RAID adapter battery/flash power module, follow all packaging instructions, and use any packaging materials for shipping that are supplied to you.

## Replacing a RAID adapter battery/flash power module

Use this information to replace a RAID adapter battery/flash power module.

### About this task

To install a RAID adapter battery/flash power module in the server, complete the following steps:

### Procedure

1. Read the safety information that begins on "Safety" on page vii and "Installation guidelines" on page 283.
2. Turn off the server and peripheral devices and disconnect all power cords and external devices.
3. Remove the top cover (see "Removing the top cover" on page 146).
4. Install the ServeRAID adapter on the system board (see "Replacing an adapter" on page 190) or install the ServeRAID adapter on the riser card and install the riser-card assembly in the server (see "Replacing an adapter" on page 190).
5. If the flash power modules are located behind the full-height, full-length adapters, remove the two shipping brackets first.

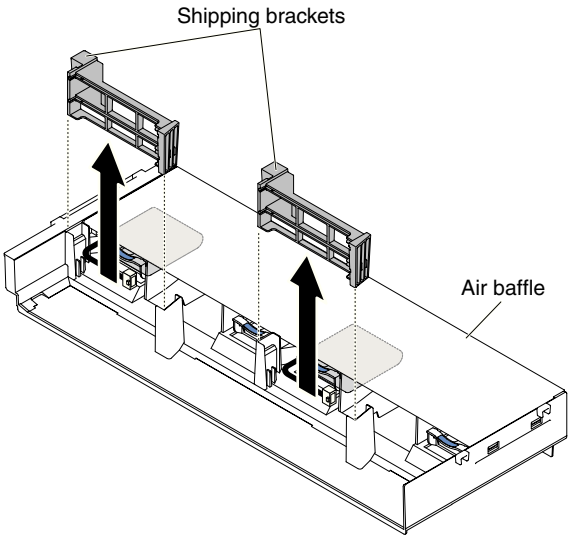


*Figure 129. Shipping bracket removal*

6. Align the battery/flash power module with the slot and push the battery into the battery/flash power module holder and make sure that the holder retains the battery/flash power module securely.

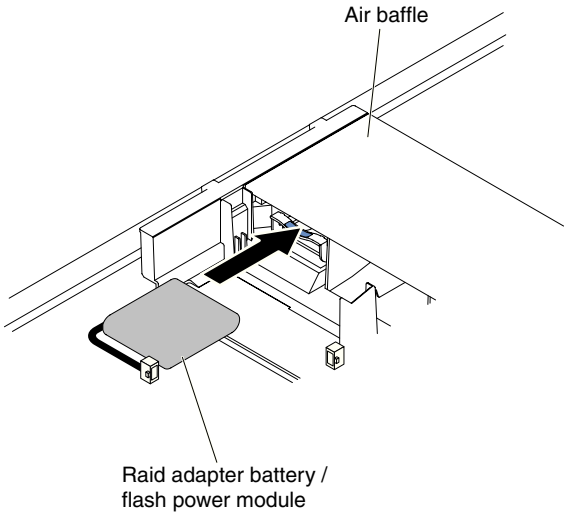


*Figure 130. RAID adapter battery/flash power module installation*

7. Connect the battery/flash power module cable to the RAID adapter battery/flash power module connector.

   **Attention:** Make sure that the cable is not pinched and does not cover any connectors or obstruct any components on the system board.
8. Reinstall the riser-card assemblies if you have remove them. See "Replacing an adapter in a riser-card assembly" on page 190.

   **Attention:**

   a. Make sure that the cable is not pinched and does not cover any connectors or obstruct any components on the system board.
   b. Make sure the wire cables are routed in the proper locations without blocking the retention brackets installation.
9. Reinstall the top cover (see "Replacing the top cover" on page 147).
10. Slide the server into the rack.
11. Reconnect the power cords and all external cables, and turn on the server and peripheral devices.

## Removing the rear two hard-disk-drive kit

Use this information to remove the rear two hard-disk-drive kit.

### About this task

See http://www.ibm.com/systems/info/x86servers/serverproven/compat/us/ for a list of hard disk drives that you can use with the server.

To remove the rear two hard-disk-drive kit, complete the following steps:

### Procedure

1. Read the safety information that begins on page "Safety" on page vii and "Installation guidelines" on page 283.
2. Turn off the server and peripheral devices, and disconnect the power cord and all external cables.
3. Remove the top cover (see "Removing the top cover" on page 146).
4. Grasp the kit at the front and the rear edge and lift it up to remove from the server. Place the kit on a flat, static-protective surface.

- 2.5-inch rear two hard-disk-drive kit removal

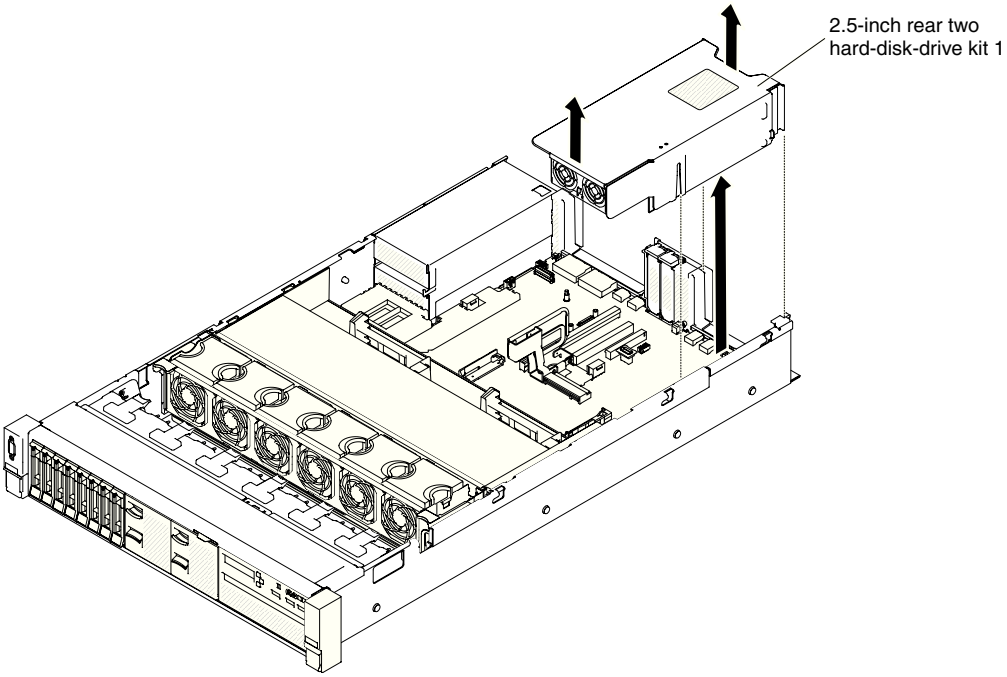


*Figure 131. 2.5-inch rear two hard-disk-drive kit removal*

- 3.5-inch rear two hard-disk-drive kit removal

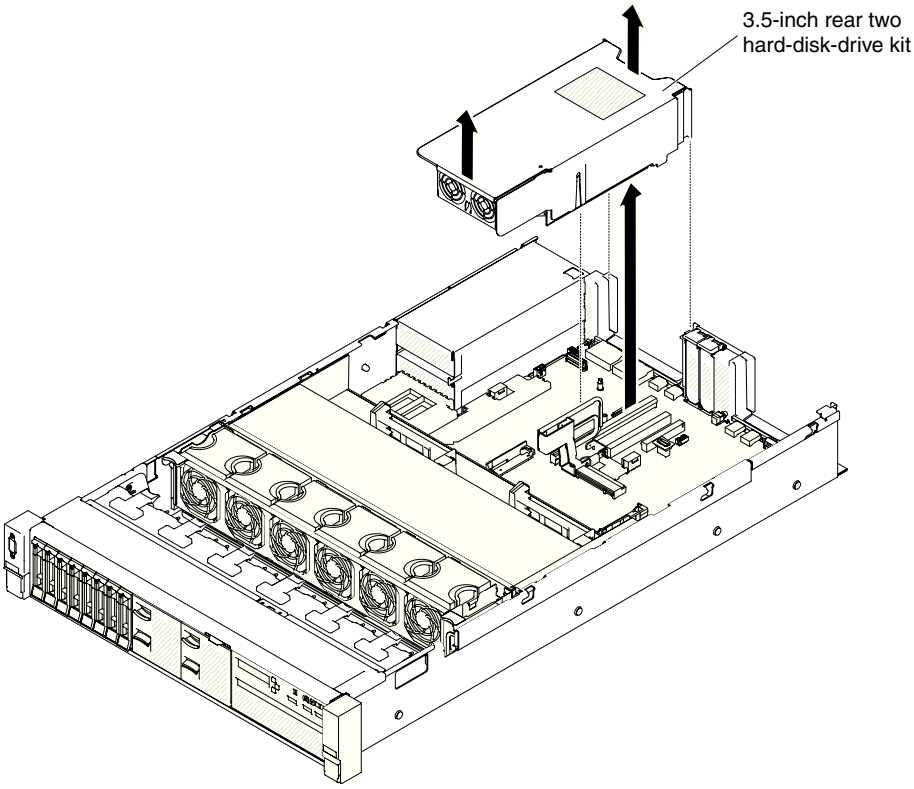


*Figure 132. 3.5-inch rear two hard-disk-drive kit removal*

## Replacing the rear two hard-disk-drive kit

Use this information to replace the rear two hard-disk-drive kit on the system board.

### About this task

**Note:** Please refer to the following rules before you install the rear two hard-disk-drive kit.

- 2.5-inch hot-swap hard disk drive model
  - Supports one 2.5-inch rear two hard-disk-drive kit
- 3.5-inch hot-swap hard disk drive model
  - Supports one 2.5-inch rear two hard-disk-drive kit, or
  - Supports two 2.5-inch rear two hard-disk-drive kits, or
  - Supports one 2.5-inch rear two hard-disk-drive kit and one 3.5-inch rear two hard-disk-drive kit

To install the rear two hard-disk-drive kit, complete the following steps:

### Procedure

1. Read the safety information that begins on "Safety" on page vii and "Installation guidelines" on page 283.
2. Turn off the server and peripheral devices and disconnect all power cords.
3. Remove the top cover (see "Removing the top cover" on page 146).
4. Align the rear two hard-disk-drive kit with the connector on the system board and align it with the slots on the chassis; then, lower it into the server and press down firmly until the rear two hard-disk-drive kit is seated correctly in the connector on the system board
   - 2.5-inch rear two hard-disk-drive kit installation

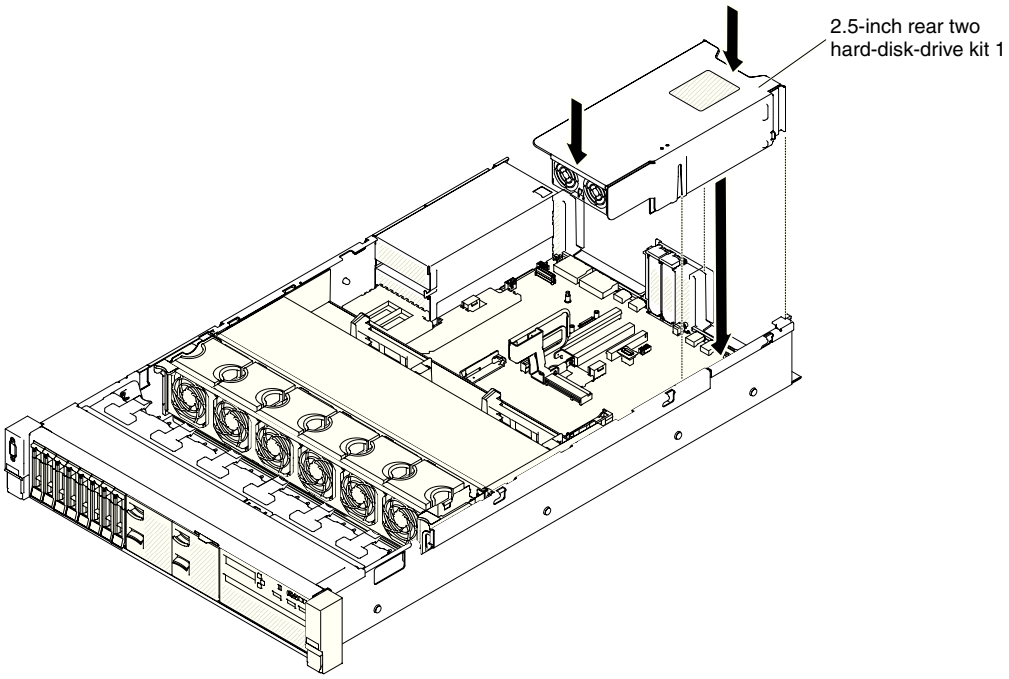


*Figure 133. 2.5-inch rear two hard-disk-drive kit installation*

- 3.5-inch rear two hard-disk-drive kit installation

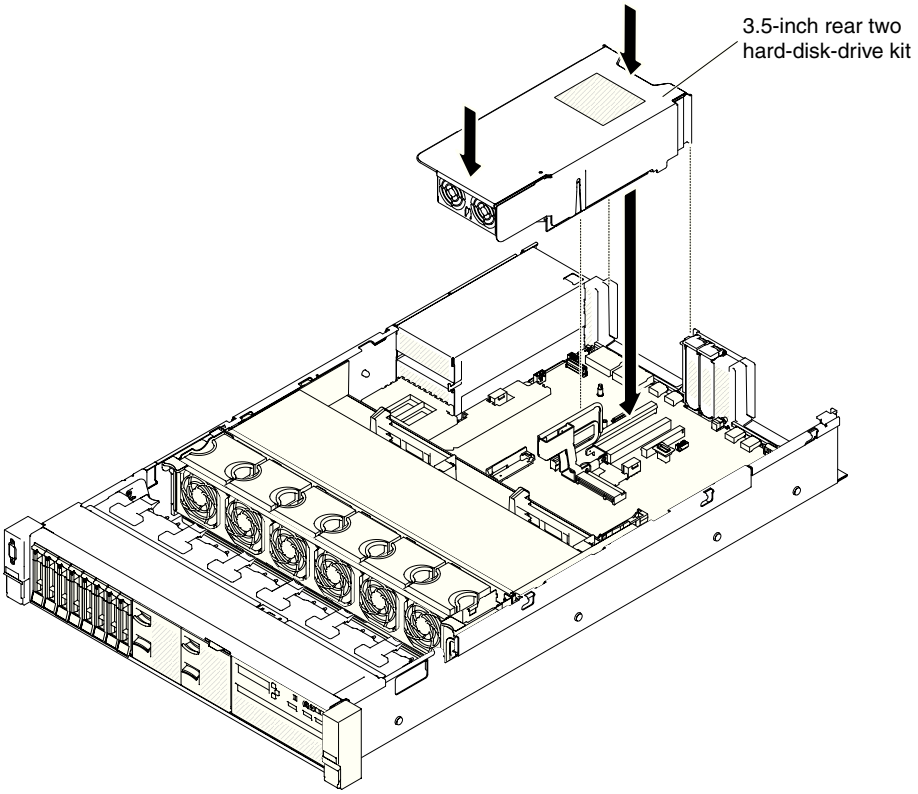


*Figure 134. 3.5-inch rear two hard-disk-drive kit installation*

5. Connect the Mini-SAS HD cable from the rear hard drive backplane to the RAID card.
   - For 2.5-inch rear two hard-disk-drive kit

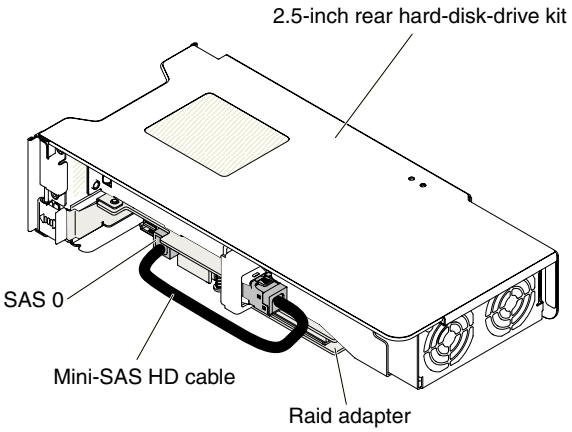


*Figure 135. 2.5-inch rear two hard-disk-drive kit cable routing*

   - For 3.5-inch rear two hard-disk-drive kit, there are two possible cable routing configurations:
     - Connect to the RAID card on the slot 5 from the rear hard drive backplane.

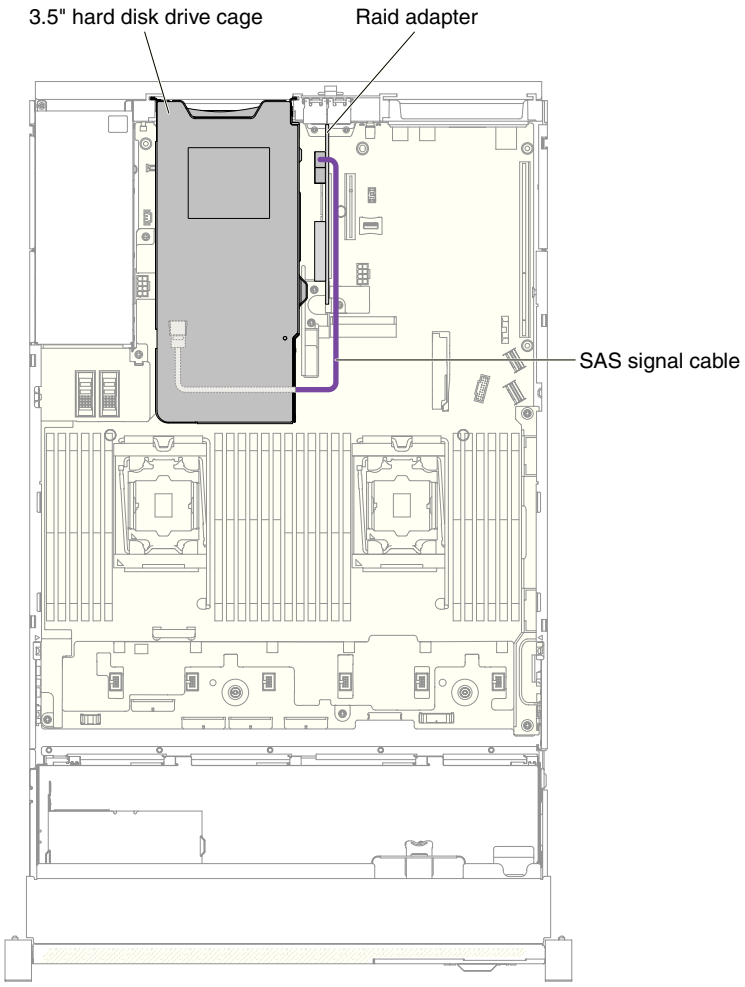


*Figure 136. 3.5-inch rear two hard-disk-drive kit cable routing*

– Connect to the 3.5-inch HDD hot-swap backplane with 12 HDDs from the rear hard drive backplane

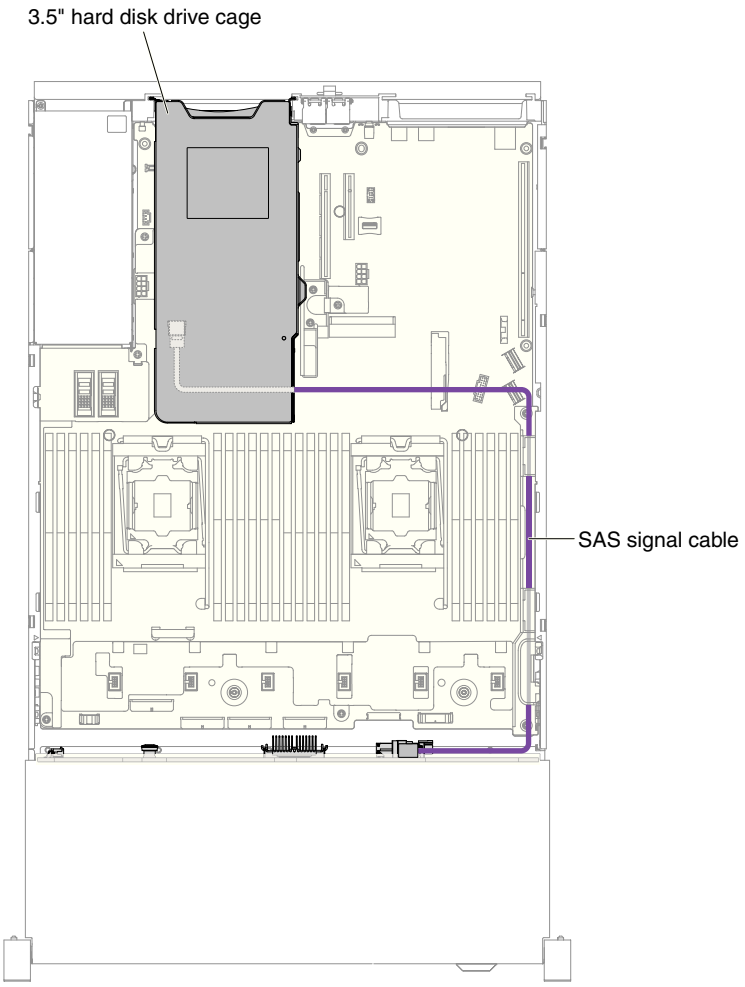


*Figure 137. 3.5-inch rear two hard-disk-drive kit cable routing*

6. Press down the HDD kit firmly until the HDD kit is fully seated in the connector on the system board.
7. Replace the top cover (see "Replacing the top cover" on page 147).
8. Slide the server into the rack.
9. Reconnect the power cords and any cables that you removed.
10. Turn on the peripheral devices and the server.

## Removing an EIA assembly

Use the following instructions to remove an EIA assembly for 2.5-inch and 3.5-inch models.

**2.5-inch model:** There are the right EIA assembly and the left EIA assembly on the server, use the following steps to remove them.

**For the right EIA assembly**

1. Read the safety information that begins on "Safety" on page vii and "Installation guidelines" on page 283.
2. Turn off the server and peripheral devices, and disconnect the power cord and all external cables.
3. Remove the cover (see "Removing the top cover" on page 146).
4. Remove the fan cage assembly (see "Removing the fan cage assembly" on page 172).
5. Disconnect the front USB/operator information panel cables form the connector mounted on the chassis side.

   **Note:** Disengage all latches, release tabs or locks on cable connectors when you disconnect all cables from the system board. Failing to release them before removing the cables will damage the cable sockets on the system board. The cable sockets on the system board are fragile. Any damage to the cable sockets may require replacing the system board.

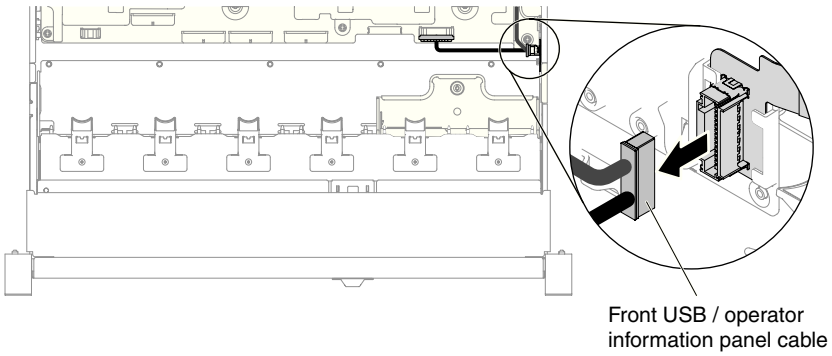


*Figure 138. Front USB/operator information panel cable removal*

6. Loosen screws and remove them.

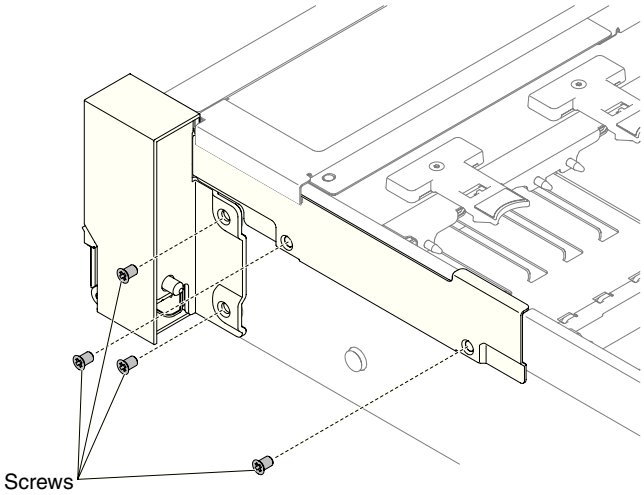


*Figure 139. Screw removal*

7. Tilt the cable cover and remove it from the server.

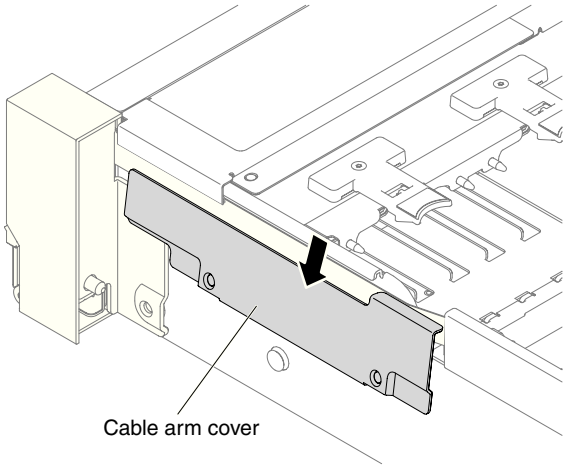


*Figure 140. Cable cover removal*

8. Grasp the EIA assembly and pull it slightly forward to remove it from the server.

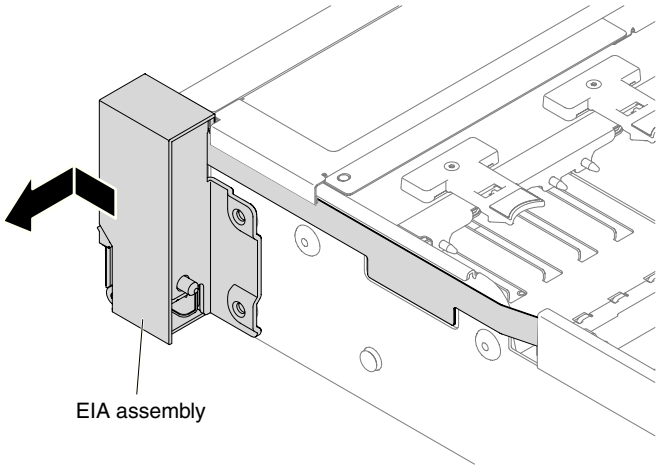


*Figure 141. EIA assembly removal*

9. Position the EIA assembly as shown in the following illustration; then, remove the assembly out of the server.

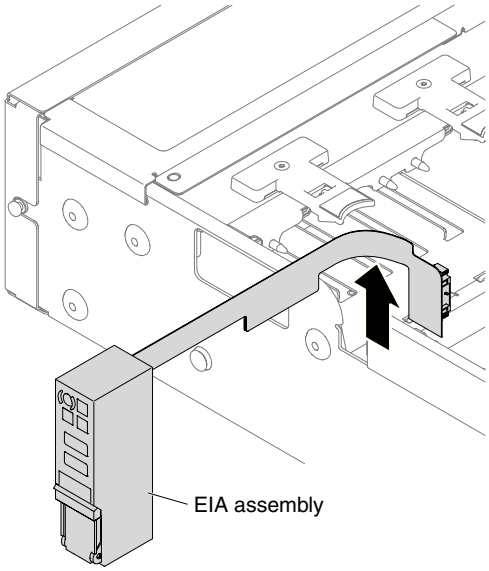


*Figure 142. EIA assembly removal*

10. If you are instructed to return the EIA assembly, follow all packaging instructions, and use any packaging materials for shipping that are supplied to you.

**For the left EIA assembly**

1. Read the safety information that begins on "Safety" on page vii and "Installation guidelines" on page 283.
2. Turn off the server and peripheral devices, and disconnect the power cord and all external cables.
3. Remove the cover (see "Removing the top cover" on page 146).
4. Remove the fan cage assembly (see "Removing the fan cage assembly" on page 172).
5. Disconnect the front video cable from the system board.

**Note:** Disengage all latches, release tabs or locks on cable connectors when you disconnect all cables from the system board. Failing to release them before removing the cables will damage the cable sockets on the system board. The cable sockets on the system board are fragile. Any damage to the cable sockets may require replacing the system board.

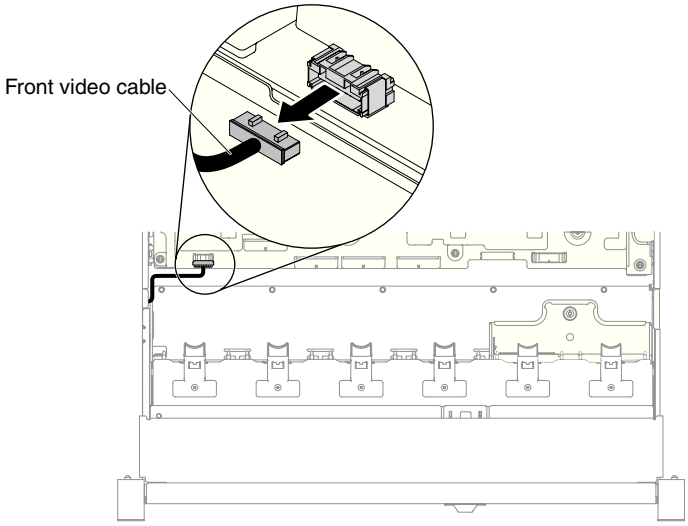


*Figure 143. Front video cable removal*

6. Loosen screws and remove them.

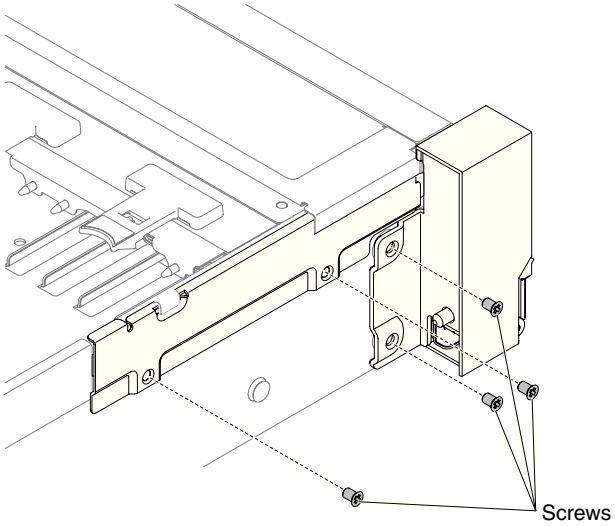


*Figure 144. Screw removal*

7. Tilt the cable cover and remove it from the server.

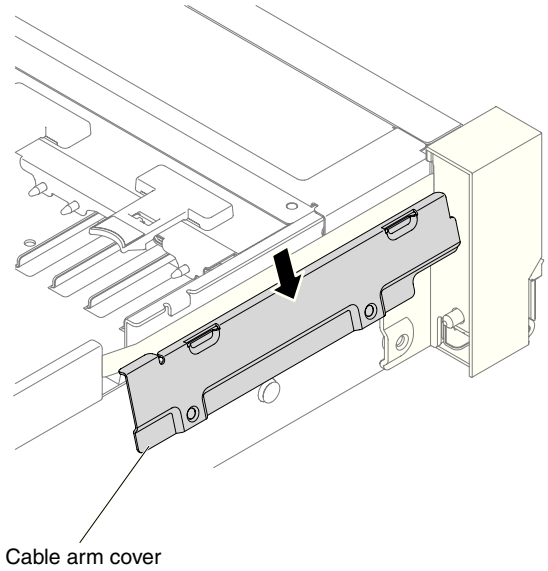


*Figure 145. Cable cover removal*

8. Grasp the EIA assembly and pull it slightly forward to remove it from the server.

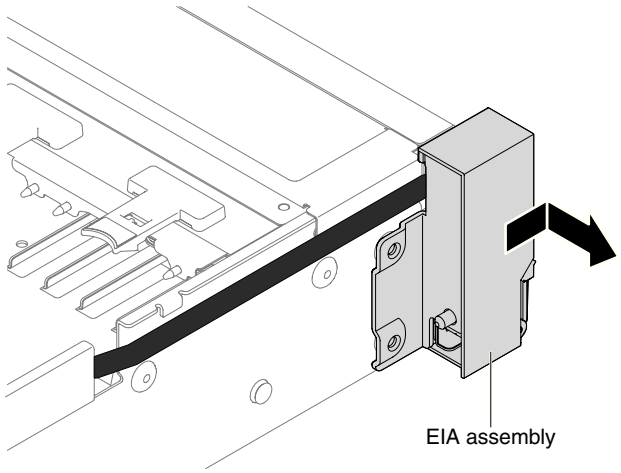


*Figure 146. EIA assembly removal*

9. If you are instructed to return the EIA assembly, follow all packaging instructions, and use any packaging materials for shipping that are supplied to you.

**3.5-inch model:** There are the right EIA assembly and the left EIA assembly on the server, use the following steps to remove them.

**For the right EIA assembly**

1. Read the safety information that begins on "Safety" on page vii and "Installation guidelines" on page 283.
2. Turn off the server and peripheral devices, and disconnect the power cord and all external cables.
3. Remove the top cover (see "Removing the top cover" on page 146).
4. Remove the fan cage assembly (see "Removing the fan cage assembly" on page 172).
5. Disconnect the front USB/operator information panel cables from the connector mounted on the chassis side wall.

   **Note:** Disengage all latches, release tabs or locks on cable connectors when you disconnect all cables from the system board. Failing to release them before removing the cables will damage the cable sockets on the system board. The cable sockets on the system board are fragile. Any damage to the cable sockets may require replacing the system board.

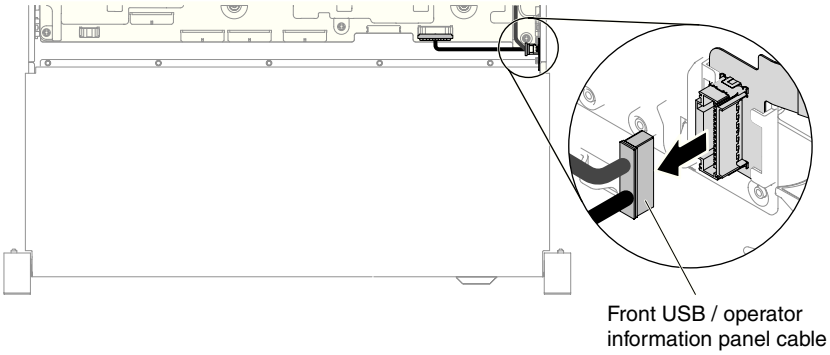


*Figure 147. Front USB/operator information panel cable removal*

6. Loosen screws and remove them.

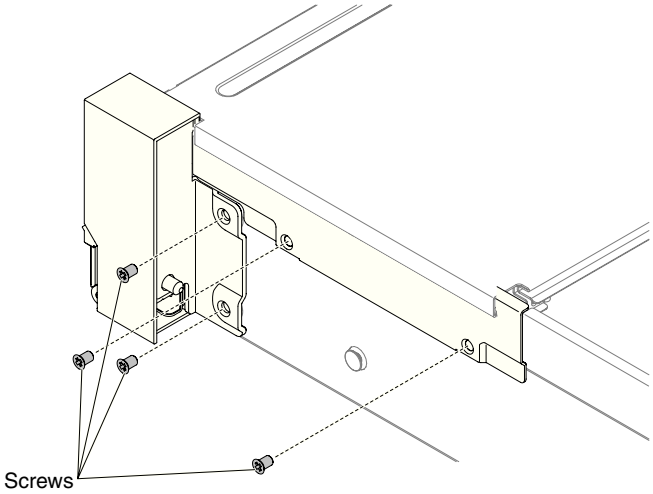


*Figure 148. Screw removal*

7. To remove the cable cover, angle the cable cover as shown in the following illustration and slide the cable cover slightly towards the rear side of the server to remove it from the server.

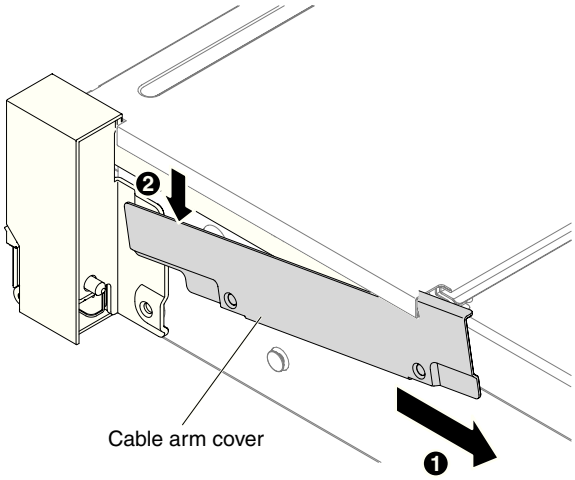


*Figure 149. Cable cover removal*

8. Grasp the EIA assembly and pull it slightly forward to remove it from the server.

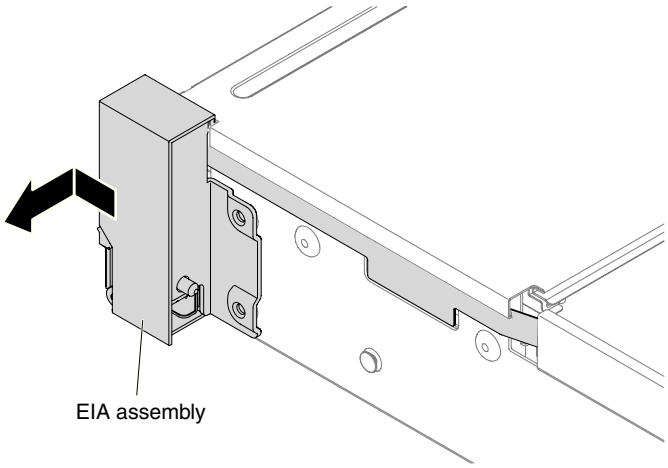


*Figure 150. EIA assembly removal*

9. Position the EIA assembly as shown in the following illustration; then, remove the assembly out of the server.

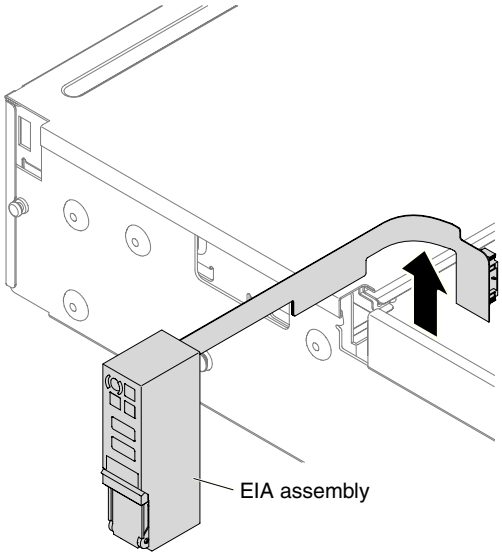


*Figure 151. Cable removal*

10. If you are instructed to return the EIA assembly, follow all packaging instructions, and use any packaging materials for shipping that are supplied to you.

**For the left EIA assembly**

1. Read the safety information that begins on "Safety" on page vii and "Installation guidelines" on page 283.
2. Turn off the server and peripheral devices, and disconnect the power cord and all external cables.
3. Remove the top cover (see "Removing the top cover" on page 146).
4. Remove the fan cage assembly (see "Removing the fan cage assembly" on page 172).
5. Disconnect the front video cable form the system board.

   **Note:** Disengage all latches, release tabs or locks on cable connectors when you disconnect all cables from the system board. Failing to release them before removing the cables will damage the cable sockets on the system board. The cable sockets on the system board are fragile. Any damage to the cable sockets may require replacing the system board.

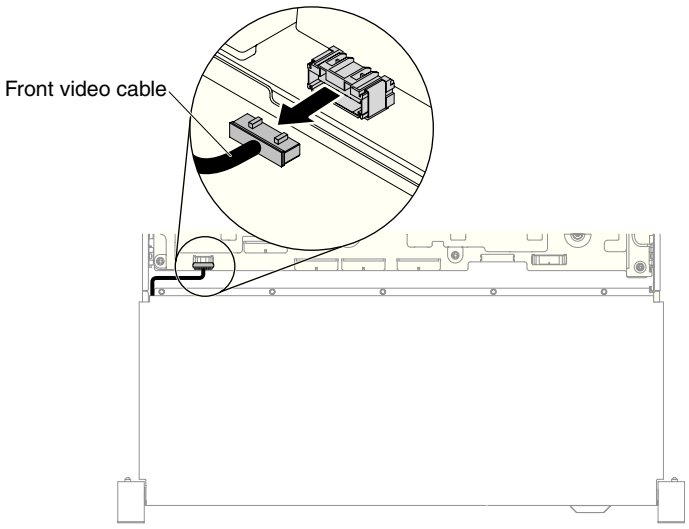


*Figure 152. Front video cable removal*

6. Loosen screws and remove them.

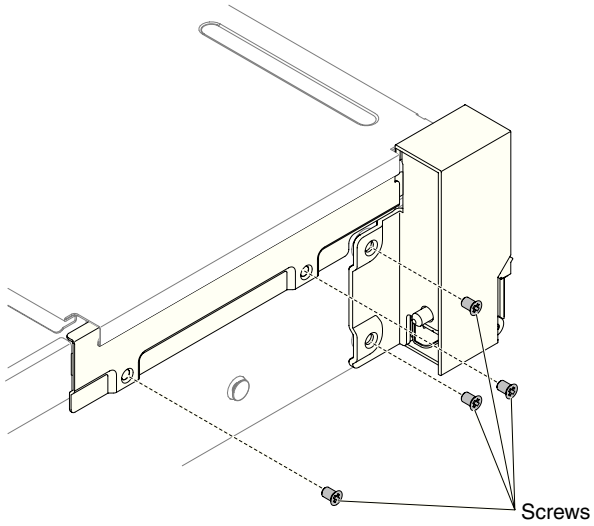


*Figure 153. Screw removal*

7. Tilt the cable cover and remove it from the server.

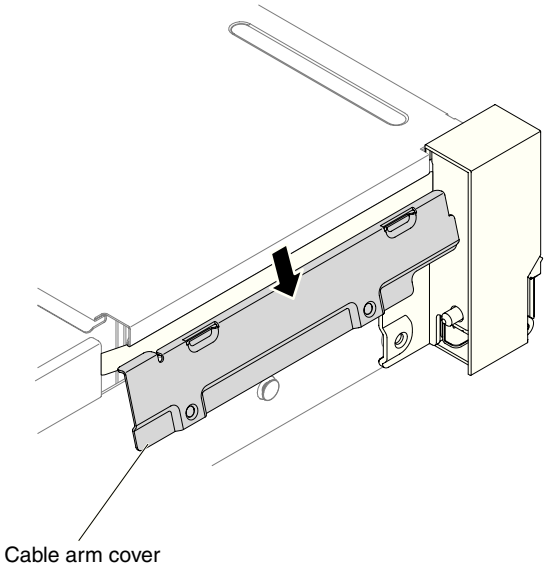


*Figure 154. Cable cover removal*

8. Grasp the EIA assembly and pull it slightly to remove it from the server.

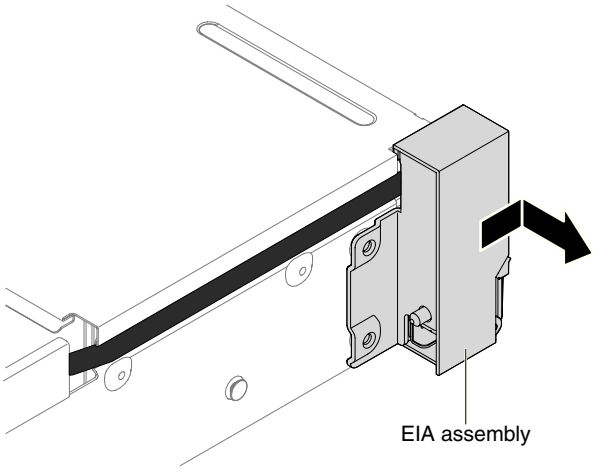


*Figure 155. EIA assembly removal*

9. If you are instructed to return the EIA assembly, follow all packaging instructions, and use any packaging materials for shipping that are supplied to you.

## Replacing an EIA assembly

Use the following instructions to replace an EIA assembly for 2.5-inch and 3.5-inch models.

**2.5-inch model:** There are the right EIA assembly and the left EIA assembly on the server, use the following steps to replace them.

**For the right EIA assembly**

1. Read the safety information that begins on "Safety" on page vii and "Installation guidelines" on page 283.
2. Turn off the server and peripheral devices, and disconnect the power cord and all external cables.
3. Remove the top cover (see "Removing the top cover" on page 146).
4. Remove the fan cage (see "Removing the fan cage assembly" on page 172).
5. Insert the cable connector into the cable connector holder.

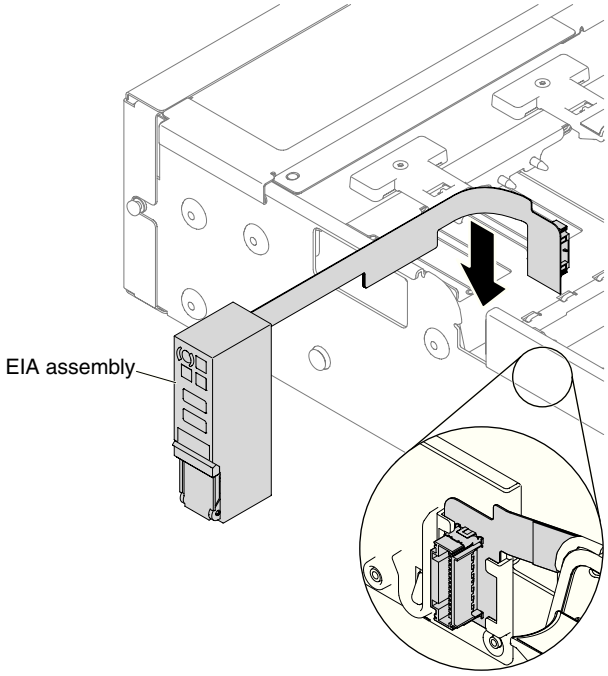


*Figure 156. Cable connector installation*

6. Align the EIA assembly with the alignment pin.

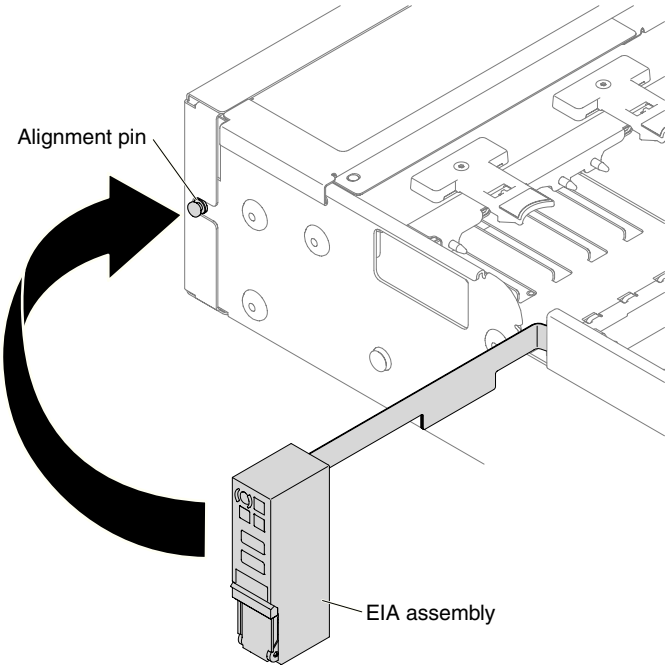


*Figure 157. EIA assembly alignment*

7. Push the EIA assembly slightly toward the rear of the server to fix the EIA assembly on the server.

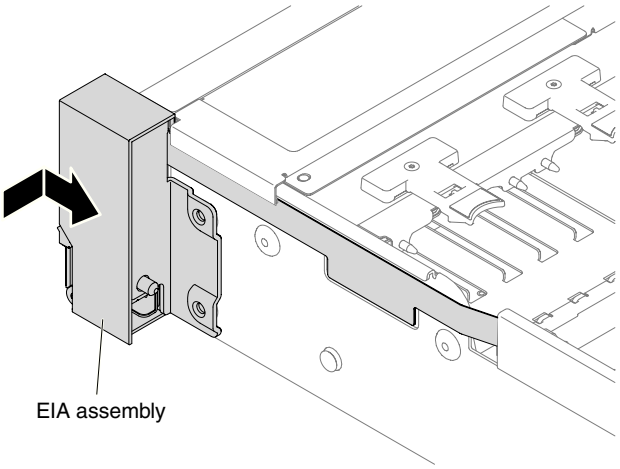


*Figure 158. EIA assembly installation*

8. Tilt and install the cable cover.

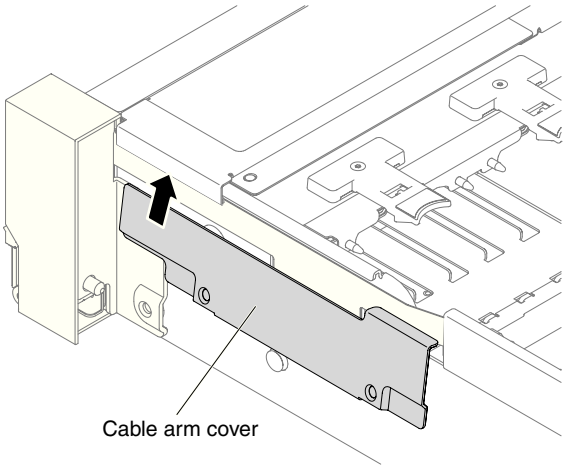


*Figure 159. Cable cover installation*

9. Fasten screws.

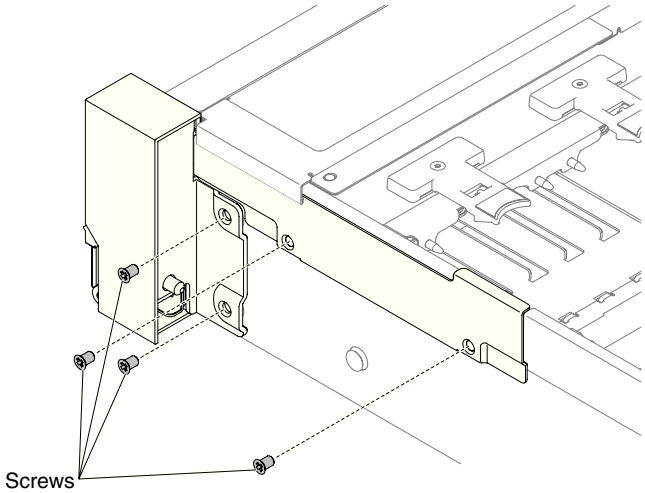


*Figure 160. Screw installation*

10. Connect the front USB/operator information panel cables to the system board and the connector mounted on the chassis side wall.

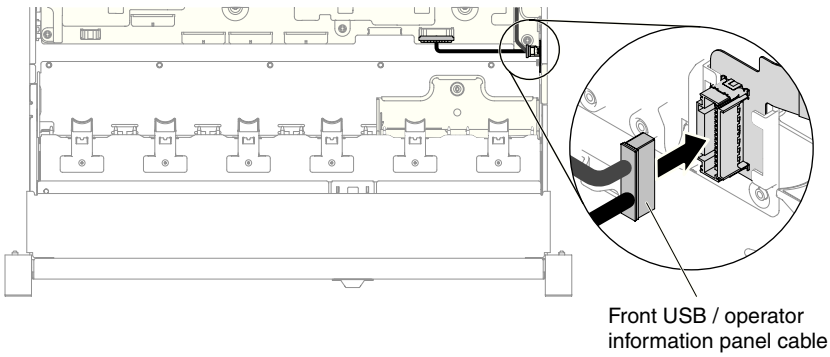


*Figure 161. Cable connection*

11. Replace the fan cage assembly (see “Replacing the fan cage assembly” on page 173).
12. Replace the top cover (see “Replacing the top cover” on page 147).
13. Slide the server into the rack.
14. Reconnect the power cords and any cables that you removed.
15. Turn on the peripheral devices and the server.

**For the left EIA assembly**

1. Read the safety information that begins on “Safety” on page vii and “Installation guidelines” on page 283.
2. Turn off the server and peripheral devices, and disconnect the power cord and all external cables.
3. Remove the top cover (see “Removing the top cover” on page 146).
4. Remove the fan cage assembly (see “Removing the fan cage assembly” on page 172).
5. Route the cable into the slot.

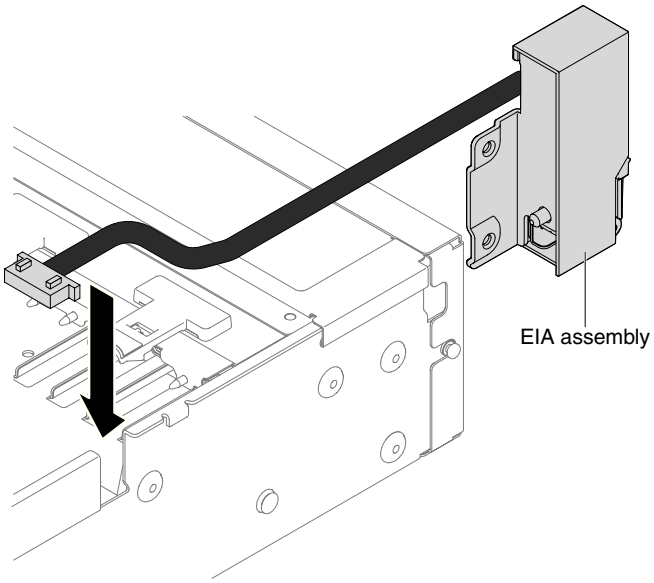


*Figure 162. Cable routing*

6. Align the EIA assembly with the alignment pin and push it slightly toward the rear of the server fix the EIA assembly on the server.

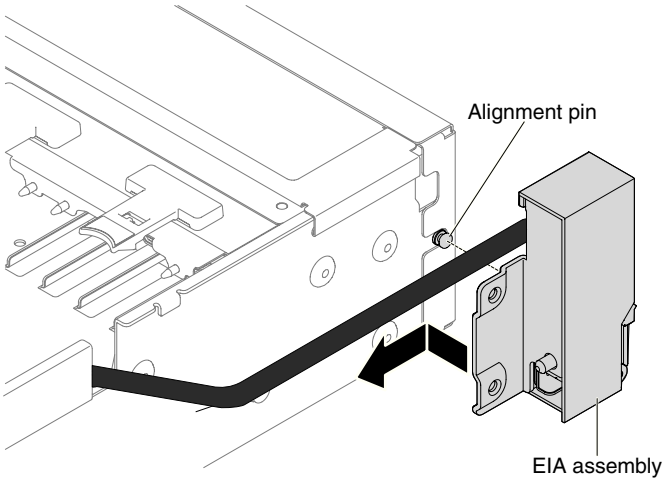


*Figure 163. EIA assembly alignment*

7. Tilt and install the cable cover.

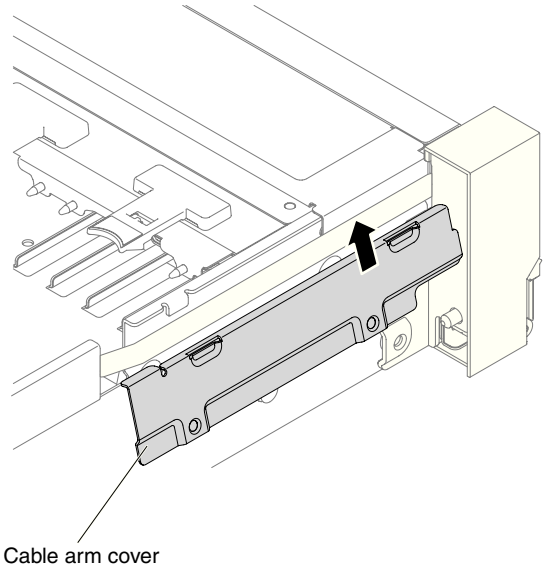


*Figure 164. Cable cover installation*

8. Fasten screws.

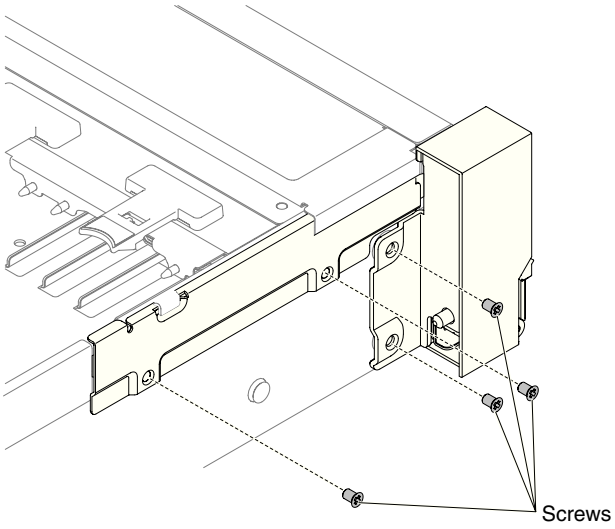


*Figure 165. Screw installation*

9. Connect the front video cable to the system board.

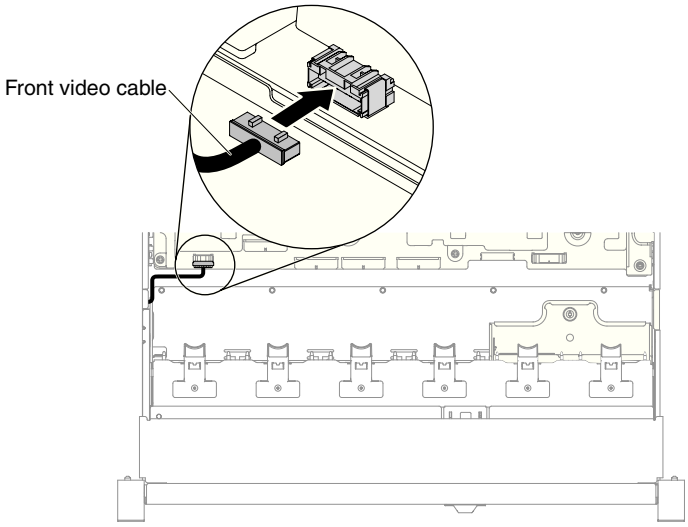


*Figure 166. Cable connection*

10. Replace the fan cage assembly (see "Replacing the fan cage assembly" on page 173).
11. Replace the top cover (see "Replacing the top cover" on page 147).
12. Slide the server into the rack.
13. Reconnect the power cords and any cables that you removed.
14. Turn on the peripheral devices and the server.

**3.5-inch model:** There are the right EIA assembly and the left EIA assembly on the server, use the following steps to replace them.

**For the right EIA assembly**

1. Read the safety information that begins on “Safety” on page vii and “Installation guidelines” on page 283.
2. Turn off the server and peripheral devices, and disconnect the power cord and all external cables.
3. Remove the cover (see “Removing the top cover” on page 146).
4. Remove the fan cage (see “Removing the fan cage assembly” on page 172).
5. Insert the cable connector into the cable connector holder.

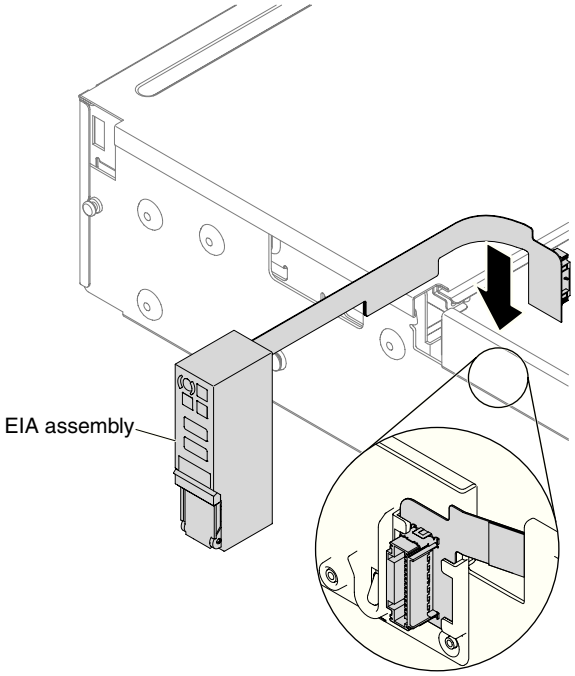


*Figure 167. Cable connector installation*

6. Align the EIA assembly with the alignment pin.

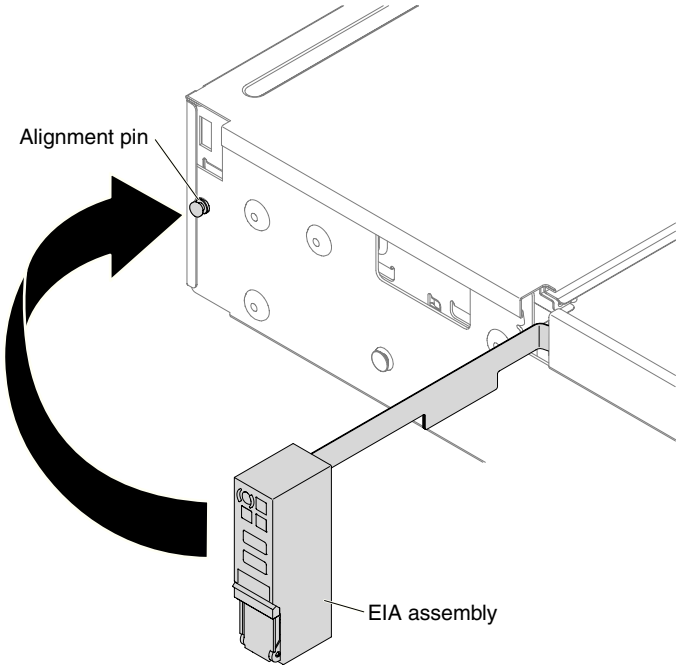


*Figure 168. EIA assembly alignment*

7. Push the EIA assembly slightly toward the rear of the server to fix the EIA assembly on the server.

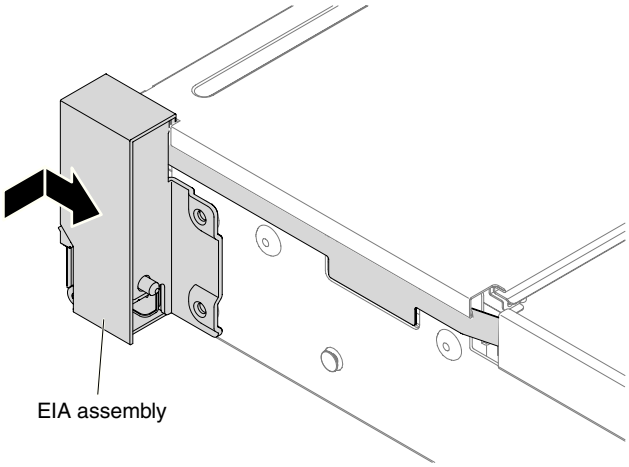


*Figure 169. EIA assembly installation*

8. Angle the cable cover as shown in the following illustration and slide the cable arm towards the front of the server.

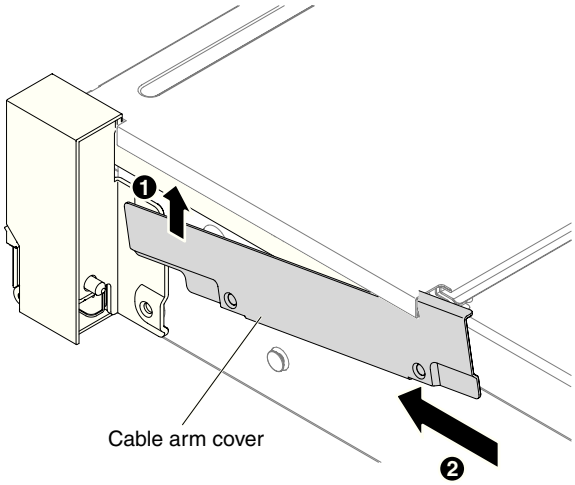


*Figure 170. Cable cover installation*

9. Fasten screws.

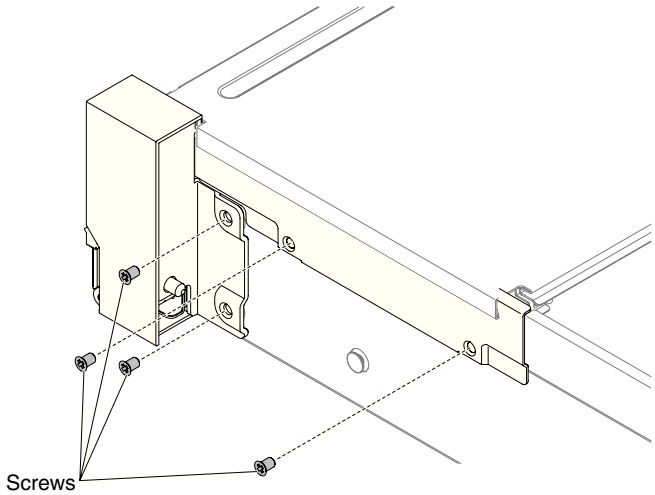


*Figure 171. Screw installation*

10. Connect the front USB/operator information panel cables to the system board and the connector mounted on the chassis side wall.

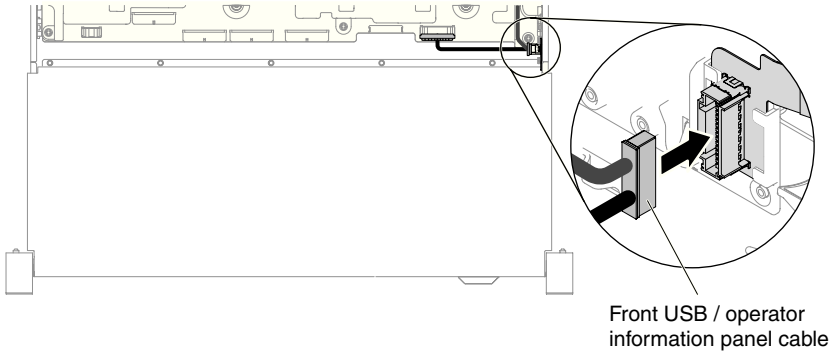


*Figure 172. Cable connection*

11. Replace the fan cage assembly (see “Replacing the fan cage assembly” on page 173).
12. Replace the top cover (see “Replacing the top cover” on page 147).
13. Slide the server into the rack.
14. Reconnect the power cords and any cables that you removed.
15. Turn on the peripheral devices and the server.

**For the left EIA assembly**

1. Read the safety information that begins on “Safety” on page vii and “Installation guidelines” on page 283.
2. Turn off the server and peripheral devices, and disconnect the power cord and all external cables.
3. Remove the top cover (see “Removing the top cover” on page 146).
4. Remove the fan cage assembly (see “Removing the fan cage assembly” on page 172).
5. Route the cable into the slot.

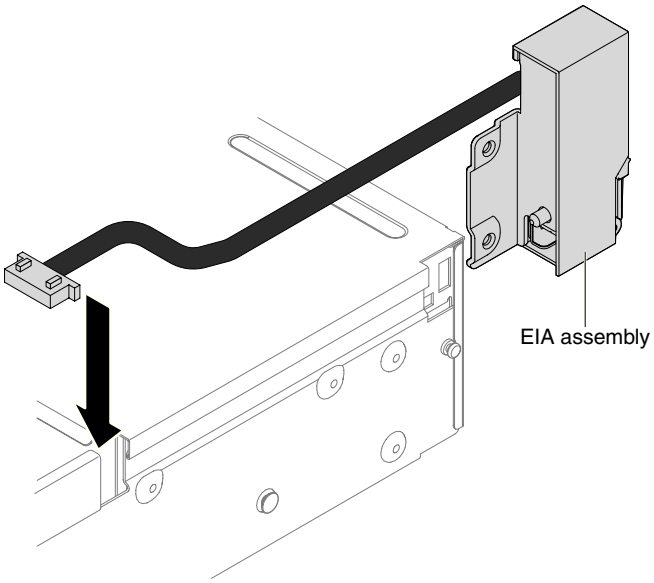


*Figure 173. Cable routing*

6. Align the EIA assembly with the alignment pin and push it slightly toward the rear of the server to fix the EIA assembly on the server.

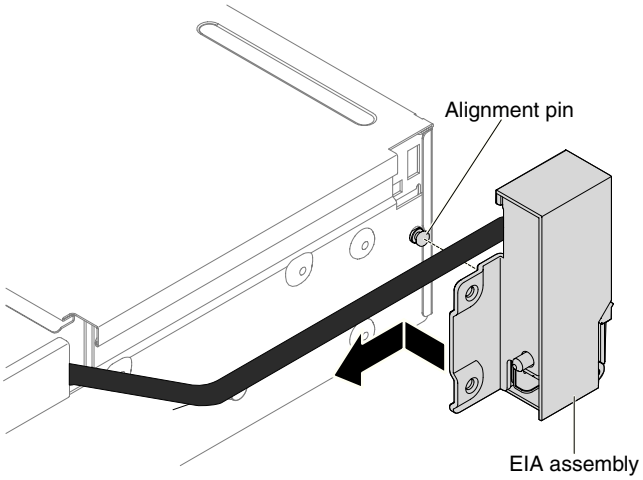


*Figure 174. EIA assembly alignment*

7. Tilt and install the cable cover.

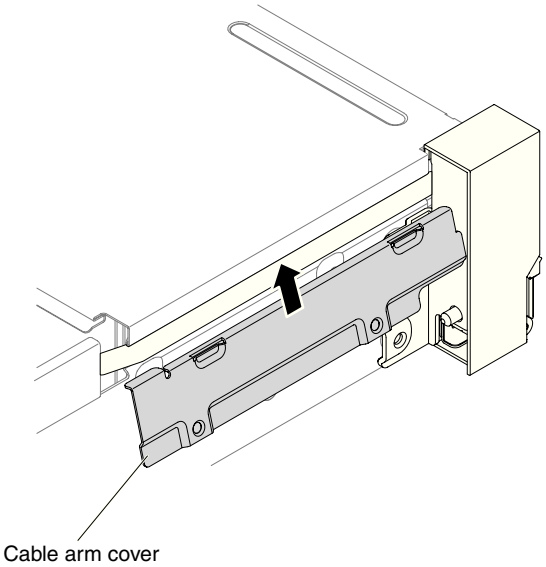


*Figure 175. Cable cover installation*

8. Fasten screws.

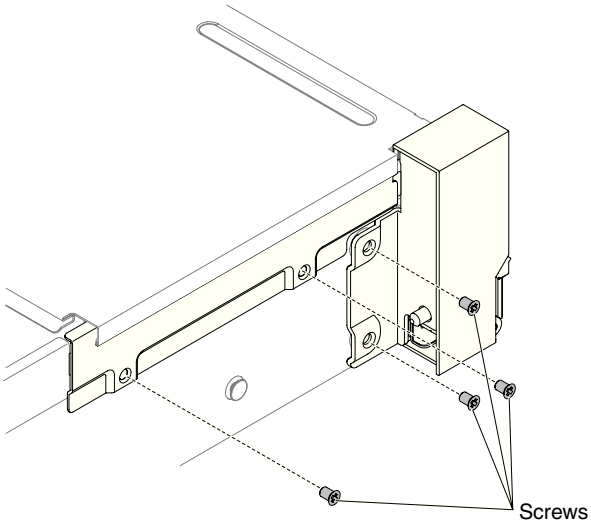


*Figure 176. Screw installation*

9. Connect the front video cable to the system board.

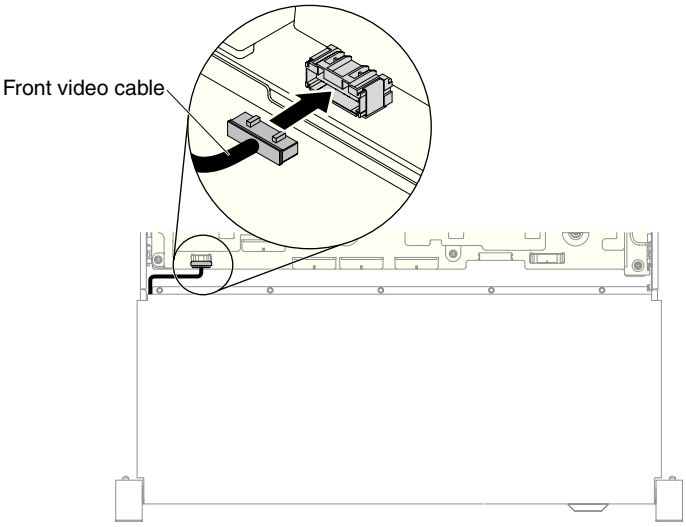


*Figure 177. Cable connection*

10. Replace the fan cage assembly (see "Replacing the fan cage assembly" on page 173).
11. Replace the top cover (see "Replacing the top cover" on page 147).
12. Slide the server into the rack.
13. Reconnect the power cords and any cables that you removed.
14. Turn on the peripheral devices and the server.

## Removing a power supply

Use this information to remove a hot-swap ac power supply.

### About this task

When you remove or install a hot-swap power supply, observe the following precautions.

**Statement 5**

**CAUTION:**
**The power control button on the device and the power switch on the power supply do not turn off the electrical current supplied to the device. The device also might have more than one power cord. To remove all electrical current from the device, ensure that all power cords are disconnected from the power source.**

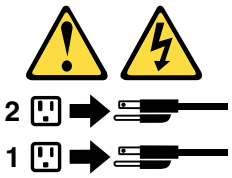


**Statement 8**

**CAUTION:**
**Never remove the cover on a power supply or any part that has the following label attached.**

**Hazardous voltage, current, and energy levels are present inside any component that has this label attached. There are no serviceable parts inside these components. If you suspect a problem with one of these parts, contact a service technician.**

To remove a hot-swap ac power supply, complete the following steps:

### Procedure

1. Read the safety information that begins on “Safety” on page vii and “Installation guidelines” on page 283.

2. If only one power supply is installed, turn off the server and peripheral devices and disconnect all power cords.
3. If the server is in a rack, at the back of the server, pull back the cable management arm to gain access to the rear of the server and the power supply.
4. Press and hold the release tab to the left. Grasp the handle and pull the power supply out of the server.

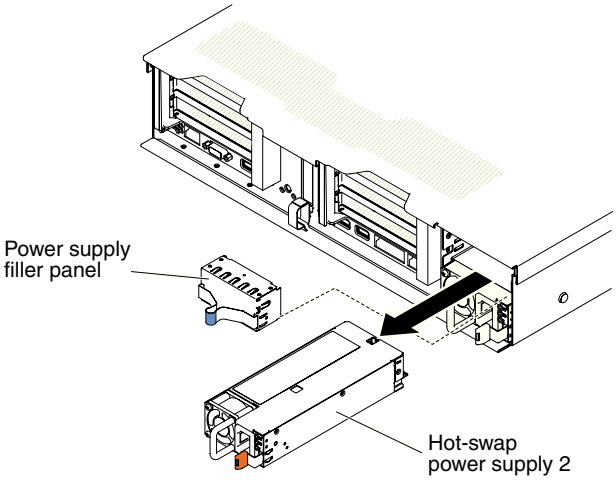


*Figure 178. Power supply removal*

5. If you are instructed to return the power supply, follow all packaging instructions, and use any packaging materials for shipping that are supplied to you.

## Replacing a power supply

Use this information to replace a hot-swap ac power supply.

### About this task

The following notes describe the type of power supply that the server supports and other information that you must consider when you install a power supply:

- Before you install an additional power supply or replace a power supply with one of a different wattage, you may use the IBM Power Configurator utility to determine current system power consumption. For more information and to download the utility, go to http://www.ibm.com/systems/bladecenter/resources/powerconfig.html.
- The server comes with one hot-swap 12-volt output power supply that connects to power supply bay 1. The input voltage is 100-127 V ac or 200-240 V ac auto-sensing.
- Power supplies in the server must be with the same power rating or wattage, and the same 80-plus efficiency level to ensure that the server will operate correctly. For example, you cannot mix 550-watt and 750-watt power supplies in the server. Moreover, you cannot mix 750-watt Platinum and 750-watt Titanium supplies in the server.
- Power supply 1 is the default/primary power supply. If power supply 1 fails, you must replace the power supply with the same wattage and the same 80-plus efficiency level immediately.
- You can order an optional power supply for redundancy.

- These power supplies are designed for parallel operation. In the event of a power-supply failure, the redundant power supply continues to power the system. The server supports a maximum of two power supplies.

**Statement 5**

**CAUTION:**
**The power control button on the device and the power switch on the power supply do not turn off the electrical current supplied to the device. The device also might have more than one power cord. To remove all electrical current from the device, ensure that all power cords are disconnected from the power source.**

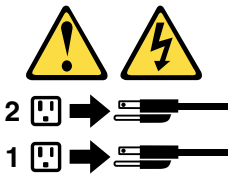


**Statement 8**

**CAUTION:**
**Never remove the cover on a power supply or any part that has the following label attached.**

**Hazardous voltage, current, and energy levels are present inside any component that has this label attached. There are no serviceable parts inside these components. If you suspect a problem with one of these parts, contact a service technician.**

To install a power supply, complete the following steps:

## Procedure

1. Read the safety information that begins on "Safety" on page vii and "Installation guidelines" on page 283.
2. Touch the static-protective package that contains the hot-swap power supply to any unpainted metal surface on the server; then, remove the power supply from the package and place it on a static-protective surface.

3. If you are installing a hot-swap power supply into an empty bay, remove the power-supply filler from the power-supply bay.

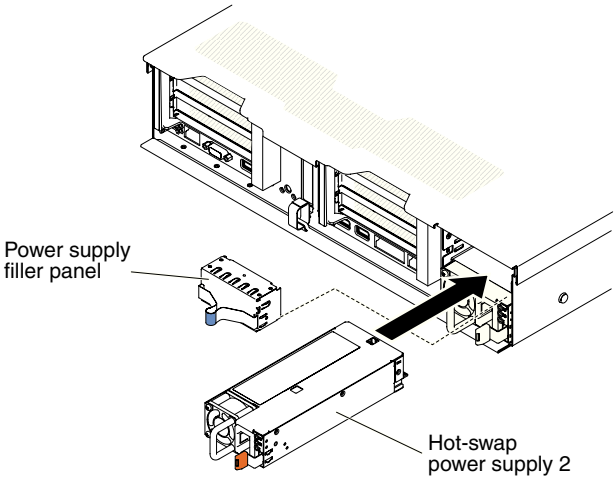


*Figure 179. Power supply installation*

4. Grasp the handle on the rear of the power supply and slide the power supply forward into the power-supply bay until it clicks. Make sure that the power supply connects firmly into the power-supply connector.

   **Attention:** Do not mix two power supplies with different rating, wattage and efficiency in the server, it is not supported.

5. Connect the power cord for the new power supply to the power-cord connector on the power supply. The following illustration shows the power-cord connectors on the back of the server.

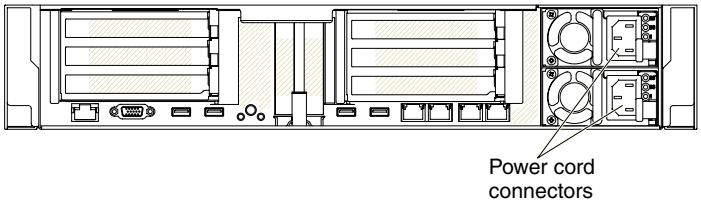


6. Route the power cord through the cable hook-and-loop on the rear of the server, to prevent the power cord from being accidentally pulled out when you slide the server in and out of the rack.
7. Connect the other end of the power cord to a properly grounded electrical outlet.
8. Make sure that the ac power LED and the dc power LED on the ac power supply are lit, indicating that the power supply is operating correctly. The two green LEDs are to the right of the power-cord connector.
9. If you are adding a power supply to the server, attach the redundant power information label that comes with this option on the server cover near the power supplies.

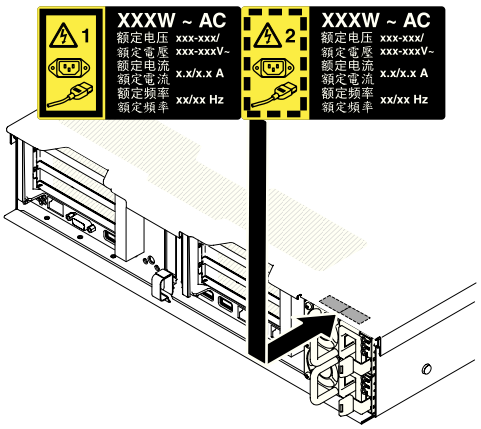


*Figure 180. Attaching the redundant power information label*

## Removing the 2.5-inch simple-swap backplate assembly/hot-swap hard disk drive backplane

Use this information to remove the 2.5-inch simple-swap backplate assembly/hot-swap hard disk drive backplane.

### About this task

To remove the 2.5-inch simple-swap backplate assembly/hot-swap hard disk drive backplane, complete the following steps:

### Procedure

1. Read the safety information that begins on “Safety” on page vii and “Installation guidelines” on page 283.
2. Turn off the server and peripheral devices and disconnect the power cords and all external cables, if necessary.
3. Remove the top cover (see “Removing the top cover” on page 146).
4. Pull the hard disk drives or fillers out of the server slightly to disengage them from the backplate assembly/backplane. See “Removing a hot-swap hard disk drive” on page 154and “Removing a simple-swap hard disk drive” on page 157 for details.
5. To obtain more working room, remove the fan cage assembly (see “Removing the fan cage assembly” on page 172).
6. Lift the two front release latches and rotate the backplate assembly/backplane toward the rear of the server to remove the backplate assembly/backplane.

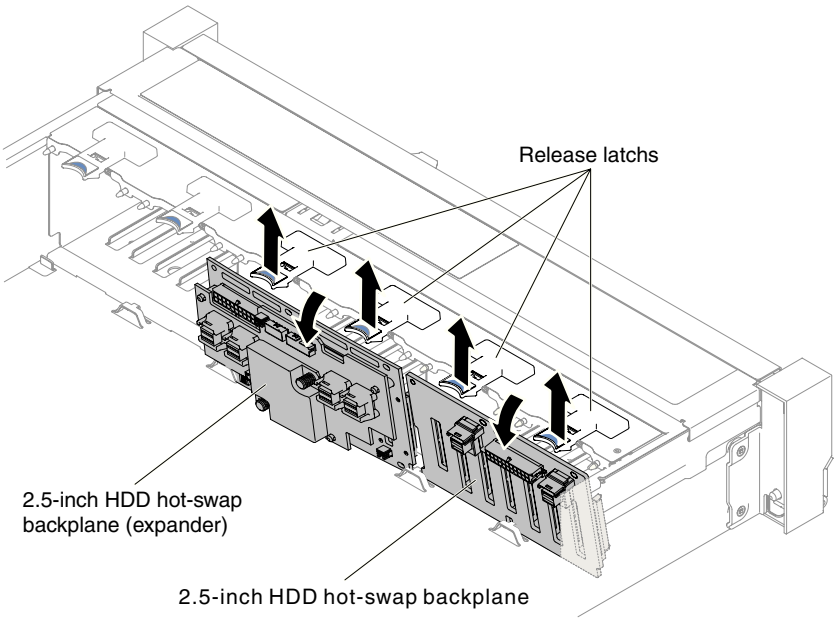


*Figure 181. 2.5-inch simple-swap backplate assembly/hot-swap hard disk drive backplane removal*

7. Disconnect all cables from the hard disk drive backplane and the system board.

   **Note:** Disengage all latches, release tabs or locks on cable connectors when you disconnect all cables from the system board. Failing to release them before removing the cables will damage the cable sockets on the system board. The cable sockets on the system board are fragile. Any damage to the cable sockets may require replacing the system board.
8. If you are instructed to return the hard disk drive backplate assembly/backplane, follow all packaging instructions, and use any packaging materials for shipping that are supplied to you.

## Replacing the 2.5-inch simple-swap backplate assembly/hot-swap hard disk drive backplane

Use this information to replace the 2.5-inch simple-swap backplate assembly/hot-swap hard disk drive backplane.

### About this task

To install the 2.5-inch simple-swap backplate assembly/hot-swap hard disk drive backplane, complete the following steps:

### Procedure

1. Read the safety information that begins on “Safety” on page vii and “Installation guidelines” on page 283.
2. Turn off the server, and disconnect all power cords and external cables.
3. Remove the top cover (see “Removing the top cover” on page 146).
4. Pull the hard disk drives or fillers out of the server slightly to disengage them from the backplate assembly/backplane. See “Removing a hot-swap hard disk drive” on page 154 and “Removing a simple-swap hard disk drive” on page 157 for details.

5. Remove the fan cage assembly (see “Removing the fan cage assembly” on page 172).
6. Insert the backplate assembly/backplane tabs into slots on the bottom of the cage and push the backplate assembly/backplane forward into the release latch (on top of the backplate assembly/backplane cage) until the backplate assembly/backplane is locked in place.

   **Note:** You can connect the cables to the drive backplate assembly/backplane before installing the backplate assembly/backplane onto the cage or you can connect the cables after you install the backplate assembly/backplane, if that is easier for you.

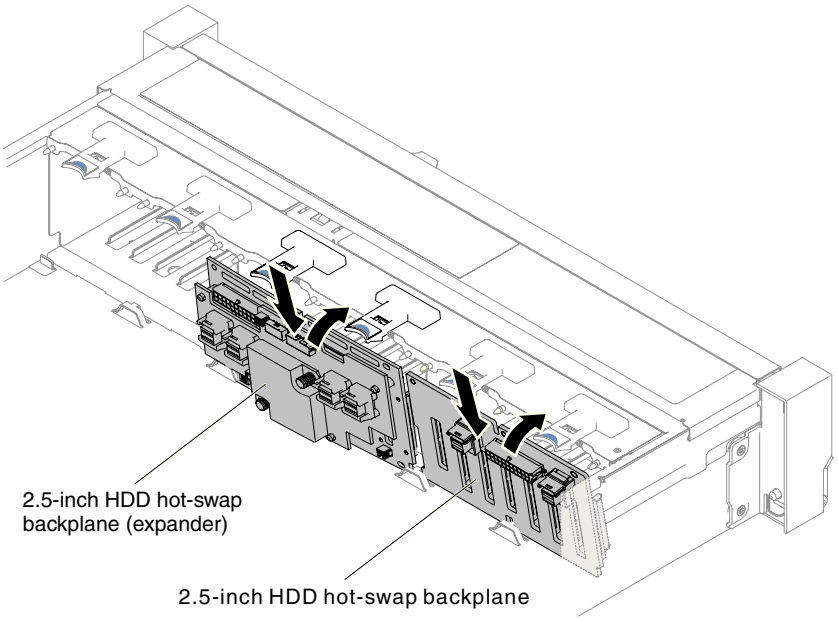


*Figure 182. 2.5-inch simple-swap backplate assembly/hot-swap hard disk drive backplane installation*

7. Connect the SAS signal and power/configuration cables to the backplate assembly/backplane and the system board. See 2.5-inch hard disk drive cable connection for details.
8. Replace the fan cage and fans if you removed them (see “Replacing the fan cage assembly” on page 173 and “Replacing a hot-swap fan” on page 175).
9. Reinstall the hard disk drives (see “Replacing a hot-swap hard disk drive” on page 155).
10. Install the top cover (see “Replacing the top cover” on page 147).
11. Slide the server into the rack.
12. Reconnect the power cords and any cables that you removed.
13. Turn on the peripheral devices and the server.

## Removing the 3.5-inch simple-swap backplate assembly/hot-swap hard disk drive backplane

Use this information to remove the 3.5-inch simple-swap backplate assembly/hot-swap hard disk drive backplane.

### About this task

To remove the 3.5-inch simple-swap backplate assembly/hot-swap hard disk drive backplane, complete the following steps:

### Procedure

1. Read the safety information that begins on "Safety" on page vii and "Installation guidelines" on page 283.
2. Turn off the server and peripheral devices and disconnect all power cords.
3. Remove the top cover (see "Removing the top cover" on page 146).
4. Pull the hard disk drives or fillers out of the server slightly to disengage them from the backplate assembly/backplane. See "Removing a hot-swap hard disk drive" on page 154and "Removing a simple-swap hard disk drive" on page 157 for details.
5. To obtain more working room, remove the fan cage assembly (see "Removing the fan cage assembly" on page 172).
6. Disconnect the SAS signal and power/configuration cables from the system board.

   **Note:** Disengage all latches, release tabs or locks on cable connectors when you disconnect all cables from the system board. Failing to release them before removing the cables will damage the cable sockets on the system board. The cable sockets on the system board are fragile. Any damage to the cable sockets may require replacing the system board.
7. Pull the two plungers while you push the backplate assembly to the left to disengage the assembly.
   - For eight 3.5-inch simple-swap backplate assembly/hot-swap hard disk drive backplane

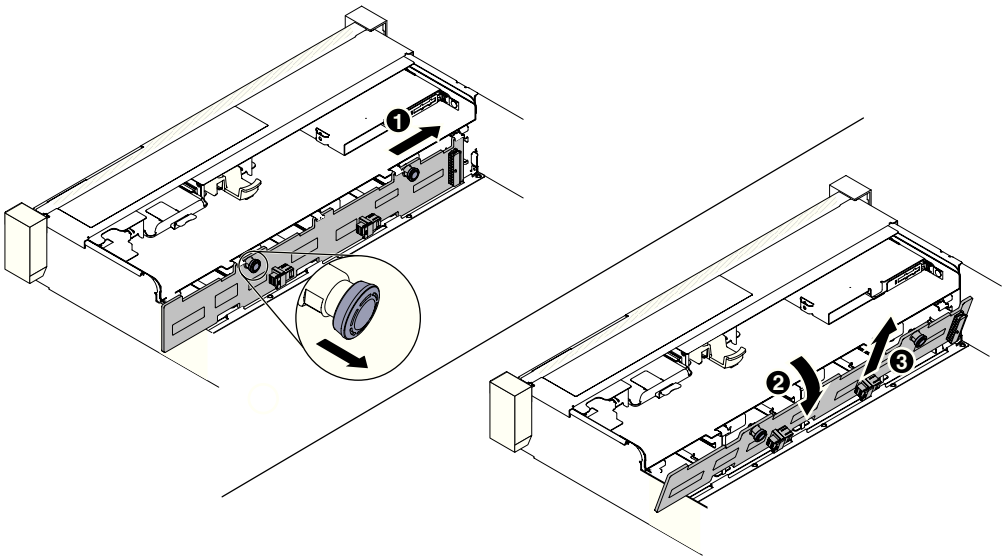

*Figure 183. 3.5-inch simple-swap backplate assembly/hot-swap hard disk drive backplane removal*

- For twelve 3.5-inch hot-swap hard disk drive backplane

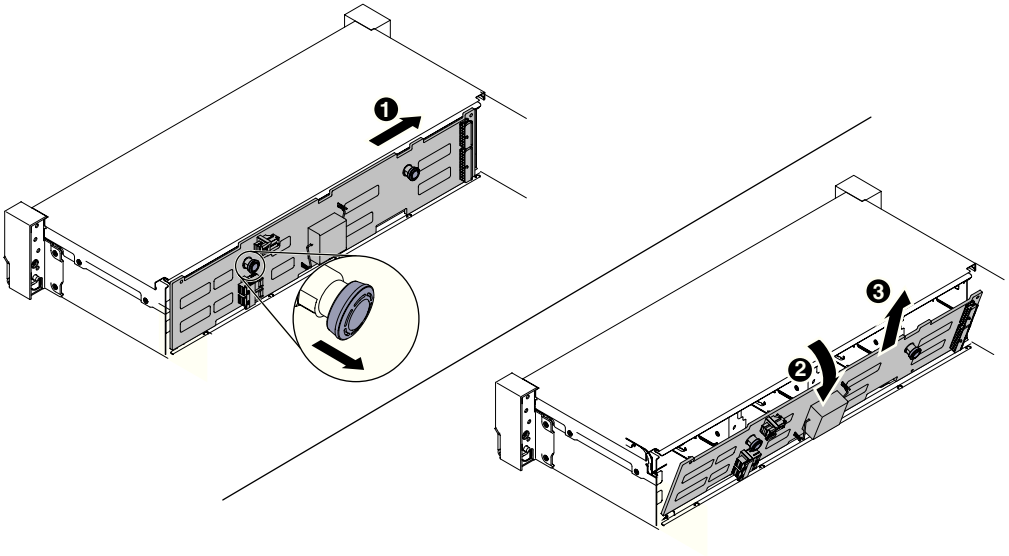

*Figure 184. 3.5-inch hot-swap hard disk drive backplane removal*

8. Rotate the backplate assembly/backplane toward the rear of the server and lift the backplate assembly/backplane up to remove it from the server.
9. If you are instructed to return the hard disk drive backplate assembly/backplane, follow all packaging instructions, and use any packaging materials for shipping that are supplied to you.

## Replacing the 3.5-inch simple-swap backplate assembly/hot-swap hard disk drive backplane

Use this information to replace the 3.5-inch simple-swap backplate assembly/hot-swap hard disk drive backplane.

### About this task

To install the 3.5-inch simple-swap backplate assembly/hot-swap hard disk drive backplane, complete the following steps:

### Procedure

1. Read the safety information that begins on "Safety" on page vii and "Installation guidelines" on page 283.
2. Turn off the server, and disconnect all power cords and external cables.
3. Remove the top cover (see "Removing the top cover" on page 146).
4. Pull the hard disk drives or fillers out of the server slightly to disengage them from the backplate assembly/backplane. See "Removing a hot-swap hard disk drive" on page 154and "Removing a simple-swap hard disk drive" on page 157 for details.
5. Remove the fan cage assembly (see "Removing the fan cage assembly" on page 172).
6. **1** Insert the backplate assembly/backplane tabs into slots on the bottom of the drive cage at an angle; then, **2** rotate the backplate assembly/backplane toward the front the server.

   **Note:** You can connect the cables to the drive backplate assembly/backplane before installing the backplate assembly/backplane onto the cage or you can connect the cables after you install the backplate assembly/backplane, if that is easier for you.
7. **3** Push the backplate assembly/backplane to the left to engage the assembly into place.
   - For eight 3.5-inch simple-swap backplate assembly/hot-swap hard disk drive backplane

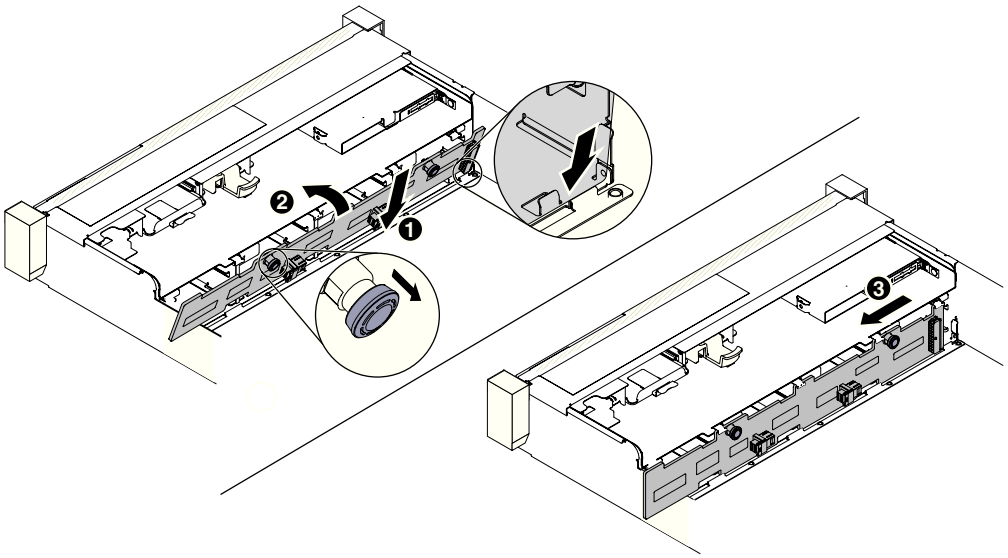

*Figure 185. Eight 3.5-inch simple-swap backplate assembly/hot-swap hard disk drive backplane*

- For twelve 3.5-inch hot-swap hard disk drive backplane

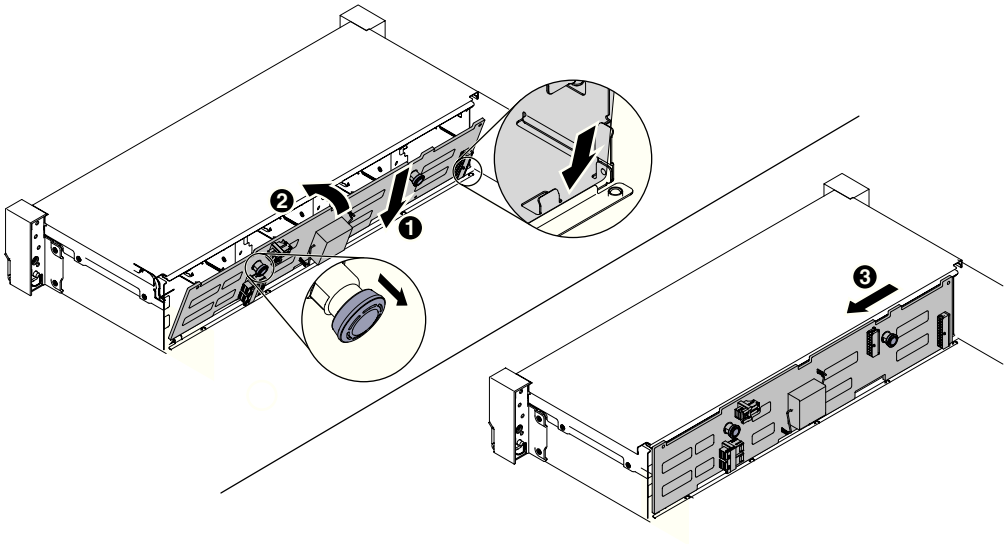

*Figure 186. 3.5-inch hot-swap hard disk drive backplane installation*

8. Connect the signal and power-configuration cables to the backplane and the system board. See 3.5-inch hard disk drive cable connection for more information.
9. Reinstall the hard disk drives and filler panels (see "Replacing a simple-swap hard disk drive" on page 158).
10. Replace the fan cage assembly and fans if you removed them (see "Replacing the fan cage assembly" on page 173 and "Replacing a hot-swap fan" on page 175).
11. Install the top cover (see "Replacing the top cover" on page 147).
12. Slide the server into the rack.
13. Reconnect the power cords and any cables that you removed.

14. Turn on the peripheral devices and the server.

## Removing a USB embedded hypervisor flash device

Use this information to remove a USB embedded hypervisor flash device.

### About this task

To remove a USB hypervisor flash device, complete the following steps:

### Procedure

1. Read the safety information that begins on “Safety” on page vii and “Installation guidelines” on page 283.
2. Turn off the server and peripheral devices and disconnect the power cords.
3. Remove the top cover (see “Removing the top cover” on page 146).
4. Remove the flash device:

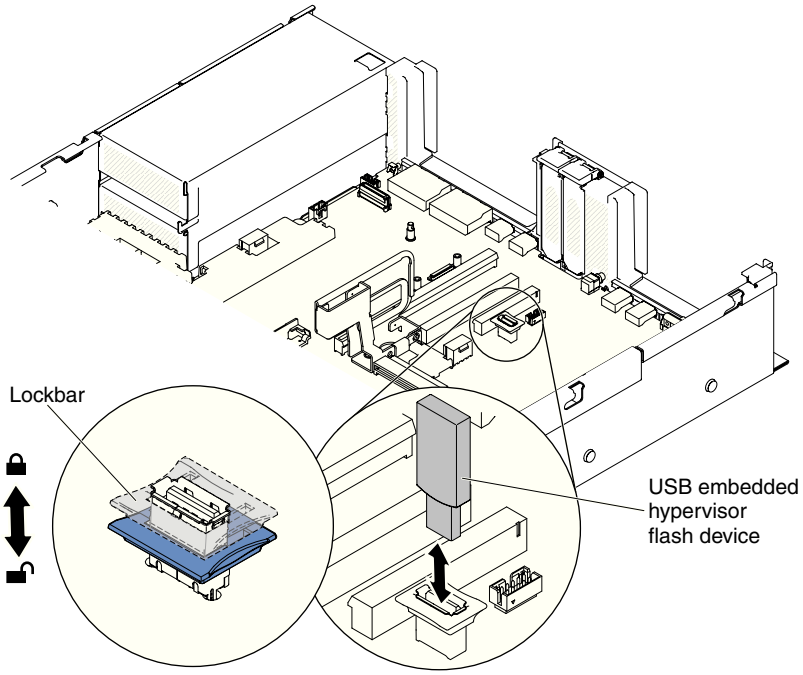


*Figure 187. USB hypervisor flash device removal*

   a. Unlock the retention latch on the USB connector by pushing down the blue locking collar.
   b. Grasp the flash device and pull to remove it from the connector.
5. If you are instructed to return the flash device, follow all packaging instructions, and use any packaging materials for shipping that are supplied to you.

## Replacing a USB embedded hypervisor flash device

Use this information to replace a USB embedded hypervisor flash device.

### About this task

To install a USB hypervisor flash device, complete the following steps:

### Procedure

1. Read the safety information that begins on “Safety” on page vii and “Installation guidelines” on page 283.
2. Turn off the server and peripheral devices and disconnect the power cords.
3. Remove the top cover (see “Removing the top cover” on page 146).
4. Remove the riser-card assembly (see “Removing a riser-card assembly” on page 180).
5. Install the flash device:

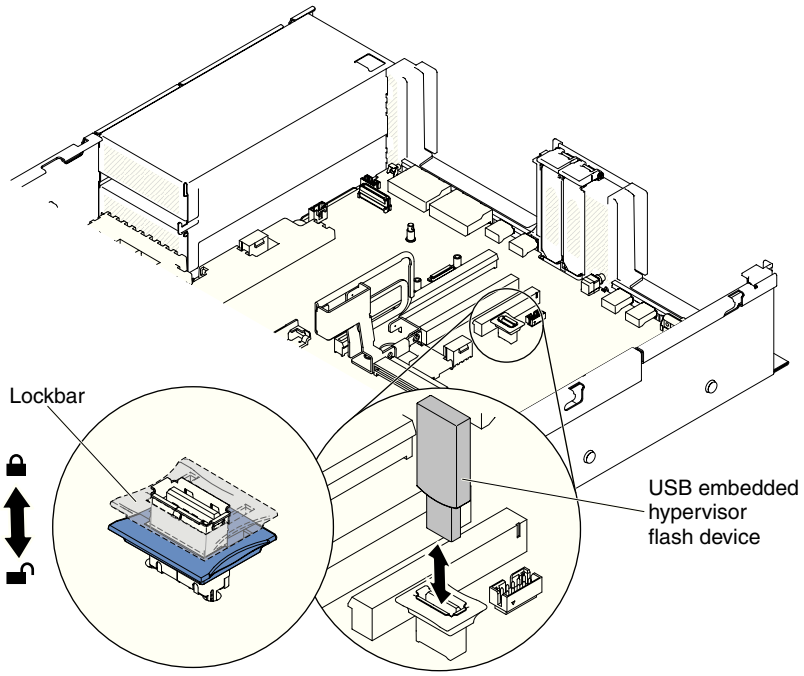


*Figure 188. USB hypervisor flash device installation*

   a. Align the flash device with the connector on the system board and push it into the USB connector until it is firmly seated.
   b. Pull up the blue locking collar to lock the flash device into the USB connector.
6. Reconnect the power cords and any cables that you removed.
7. Replace the top cover (see “Replacing the top cover” on page 147).
8. Slide the server into the rack.
9. Turn on the peripheral devices and the server.

## Removing the system battery

The following notes describe information that you must consider when replacing the battery.

### About this task

- IBM has designed this product with your safety in mind. The lithium battery must be handled correctly to avoid possible danger. If you replace the battery, you must adhere to the following instructions.

  **Note:** In the U. S., call 1-800-IBM-4333 for information about battery disposal.
- If you replace the original lithium battery with a heavy-metal battery or a battery with heavy-metal components, be aware of the following environmental consideration. Batteries and accumulators that contain heavy metals must not be disposed of with normal domestic waste. They will be taken back free of charge by the manufacturer, distributor, or representative, to be recycled or disposed of in a proper manner.
- To order replacement batteries, call 1-800-IBM-SERV within the United States, and 1-800-465-7999 or 1-800-465-6666 within Canada. Outside the U.S. and Canada, call your support center or business partner.

  **Note:** After you replace the battery, you must reconfigure the server and reset the system date and time.

  **Statement 2**

  **CAUTION:**
  **When replacing the lithium battery, use only IBM Part Number 33F8354 or an equivalent type battery recommended by the manufacturer. If your system has a module containing a lithium battery, replace it only with the same module type made by the same manufacturer. The battery contains lithium and can explode if not properly used, handled, or disposed of.**

  *Do not:*

  – **Throw or immerse into water**
  – **Heat to more than 100°C (212°F)**
  – **Repair or disassemble**

  **Dispose of the battery as required by local ordinances or regulations.**

To remove the system battery, complete the following steps:

### Procedure

1. Read the safety information that begins on “Safety” on page vii and “Installation guidelines” on page 283.
2. Turn off the server and peripheral devices and disconnect the power cords and all external cables, if necessary.
3. Remove the top cover (see “Removing the top cover” on page 146).
4. If necessary, lift the riser-card assembly 2 out of the way (see “Removing a riser-card assembly” on page 180).
5. Remove the system battery:

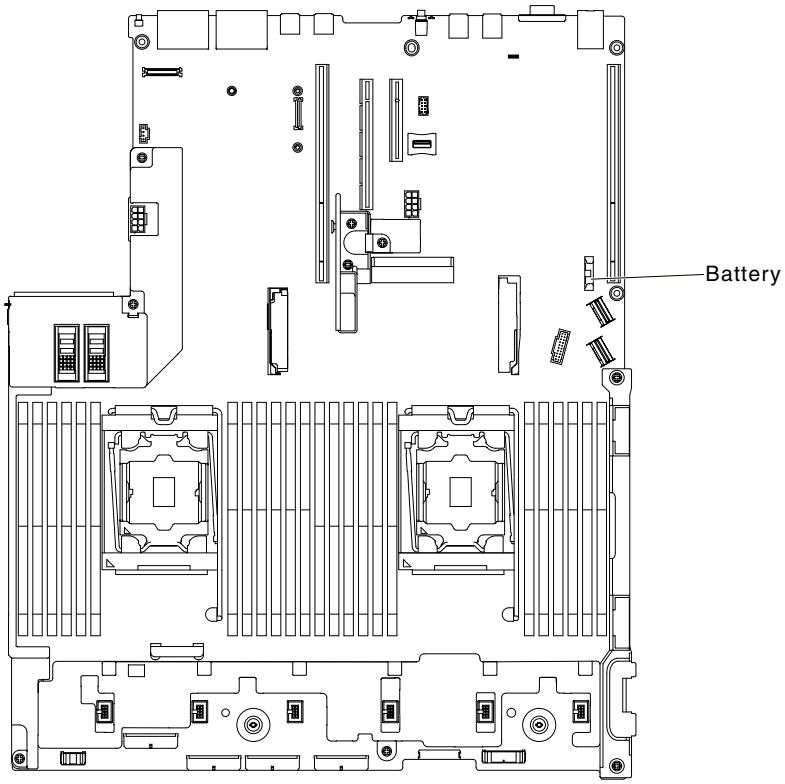


*Figure 189. System battery position*

a. If there is a rubber cover on the battery holder, use your fingers to lift the battery cover from the battery connector.
b. Use one finger to tilt the battery horizontally out of its socket, pushing it away from the socket.

   **Attention:** Neither tilt nor push the battery by using excessive force.

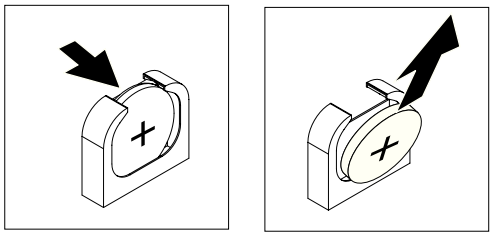

*Figure 190. System battery removal*

c. Use your thumb and index finger to lift the battery from the socket.

   **Attention:** Do not lift the battery by using excessive force. Failing to remove the battery properly may damage the socket on the system board. Any damage to the socket may require replacing the system board.

6. Dispose of the battery as required by local ordinances or regulations. See the *IBM Environmental Notices and User's Guide* on the IBM *Documentation* CD for more information.

## Replacing the system battery

The following notes describe information that you must consider when replacing the system battery in the server.

### About this task

- When replacing the system battery, you must replace it with a lithium battery of the same type from the same manufacturer.
- To order replacement batteries, call 1-800-426-7378 within the United States, and 1-800-465-7999 or 1-800-465-6666 within Canada. Outside the U.S. and Canada, call your IBM sales representative or IBM reseller.
- After you replace the system-board battery, you must reconfigure the server and reset the system date and time.
- To avoid possible danger, read and follow the following safety statement.

**Statement 2**

**CAUTION:**
**When replacing the lithium battery, use only IBM Part Number 33F8354 or an equivalent type battery recommended by the manufacturer. If your system has a module containing a lithium battery, replace it only with the same module type made by the same manufacturer. The battery contains lithium and can explode if not properly used, handled, or disposed of.**

*Do not:*

- **Throw or immerse into water**
- **Heat to more than 100°C (212°F)**
- **Repair or disassemble**

**Dispose of the battery as required by local ordinances or regulations.**

To install the replacement system battery, complete the following steps:

### Procedure

1. Follow any special handling and installation instructions that come with the replacement battery.
2. Read the safety information that begins on "Safety" on page vii and "Installation guidelines" on page 283.
3. Turn off the server and peripheral devices and disconnect the power cords and all external cables, if necessary.
4. Remove the top cover (see "Removing the top cover" on page 146).
5. If necessary, lift the riser-card assembly 2 out of the way (see "Removing a riser-card assembly" on page 180).
6. Insert the new battery:

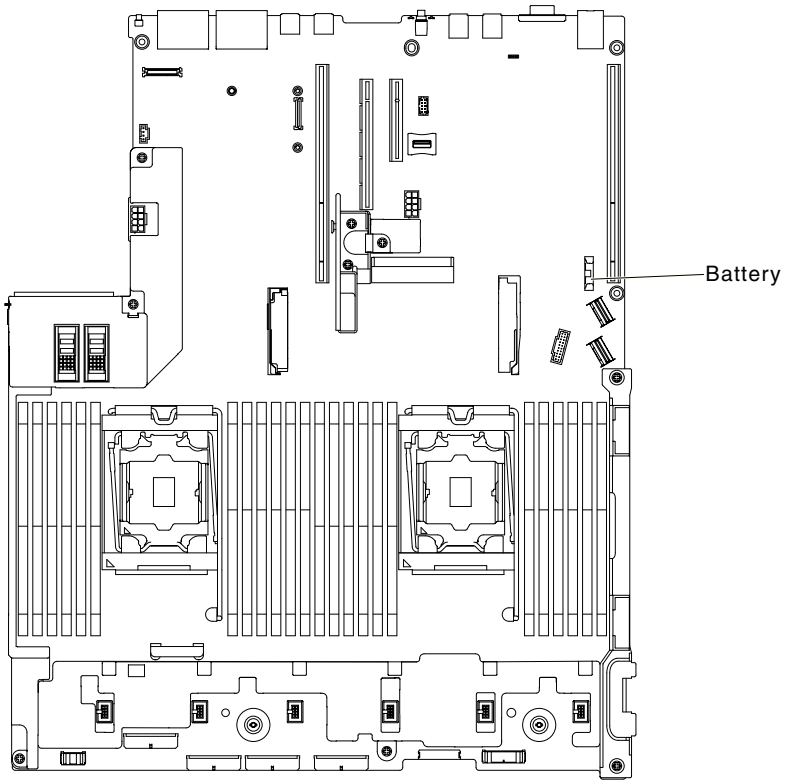


*Figure 191. System battery position*

a. Tilt the battery so that you can insert it into the socket on the side opposite the battery clip.

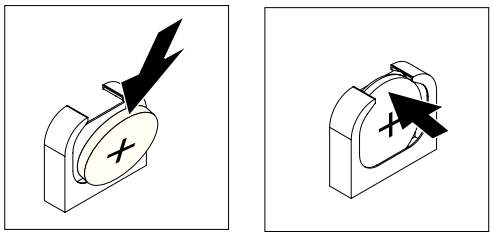

*Figure 192. System battery installation*

b. Press the battery down into the socket until it clicks into place. Make sure that the battery clip holds the battery securely.

c. If you removed a rubber cover from the battery holder, use your fingers to install the battery cover on top of the battery connector.

7. Reinstall the riser-card assembly 2 (see "Replacing a riser-card assembly" on page 181), if necessary.
8. Install the top cover (see "Replacing the top cover" on page 147).
9. Slide the server into the rack.
10. Reconnect the external cables; then, reconnect the power cords and turn on the peripheral devices and the server.
11. Start the Setup utility and reset the configuration.
    - Set the system date and time.
    - Set the power-on password.

- Reconfigure the server.

See “Using the Setup utility” on page 48 for details.

## Removing the LCD system information display panel

Use this information to remove the LCD system information display panel.

### About this task

**Removing the LCD panel assembly on a 3.5-inch model**

To remove the LCD panel assembly on a 3.5-inch model, complete the following steps.

1. Read the safety information that begins on “Safety” on page vii and “Installation guidelines” on page 283.
2. Turn off the server and peripheral devices and disconnect the power cords and all external cables, if necessary.
3. Remove the top cover (see “Removing the top cover” on page 146).
4. Remove the fan cage assembly (See “Removing the fan cage assembly” on page 172).
5. Pull up the release latch slightly and slide the LCD panel assembly out of the server.

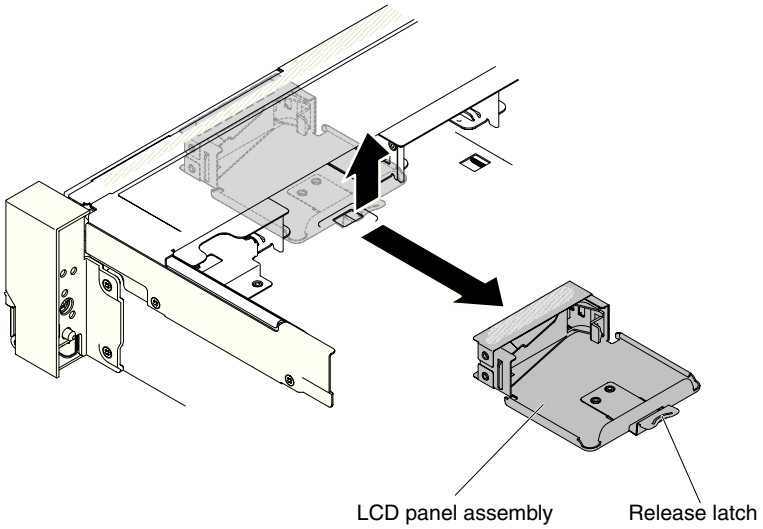


*Figure 193. LCD panel assembly removal*

6. Disconnect the cable from the back of the LCD system information display panel.

   **Note:** To disconnect the cable, press evenly on the connector release latch first; then, pull the cable out.
7. **1** Pull the tab on the LCD retention bracket to the left to disengage the retention bracket. **2** Rotate the retention bracket to remove it from the server.

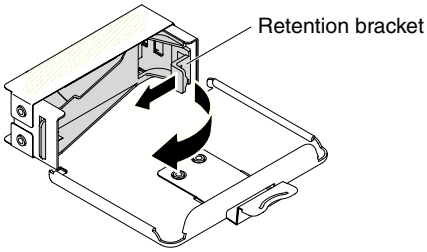


*Figure 194. Retention bracket removal*

8. Carefully remove the LCD system information display panel out of the LCD panel assembly.

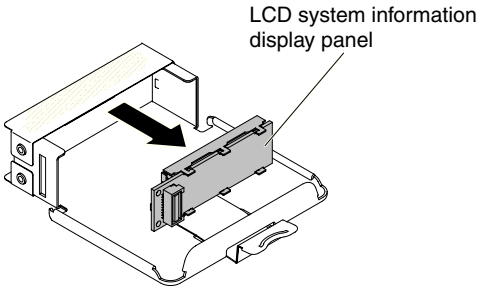


*Figure 195. LCD system information display panel removal*

9. If you are instructed to return the LCD panel assembly, follow all packaging instructions, and use any packaging materials for shipping that are supplied to you.

**Removing the LCD system information display panel on a 2.5-inch model**

To remove the LCD system information display panel inside the media cage on a 2.5-inch model, complete the following steps.

1. Read the safety information that begins on "Safety" on page vii and "Installation guidelines" on page 283.
2. Turn off the server and peripheral devices and disconnect the power cords and all external cables, if necessary.
3. Remove the top cover (see "Removing the top cover" on page 146).
4. Remove the fan cage assembly"Removing the fan cage assembly" on page 172).
5. Remove the media cage (see "Removing the media cage" on page 176),
6. Disconnect the cable from the back of the LCD system information display panel.

   **Note:** To disconnect the cable, press evenly on the connector release latch first; then, pull the cable out.
7. **1** Pull the tab on the LCD retention bracket to the left to disengage the retention bracket. **2** Rotate the retention bracket to remove it from the server.

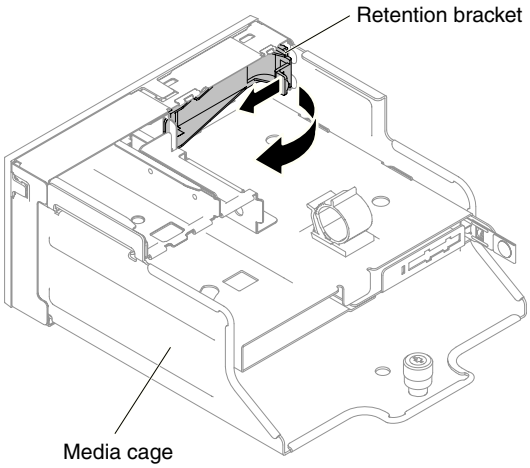


*Figure 196. Retention bracket removal*

8. Carefully remove the LCD system information display panel out of the media cage.

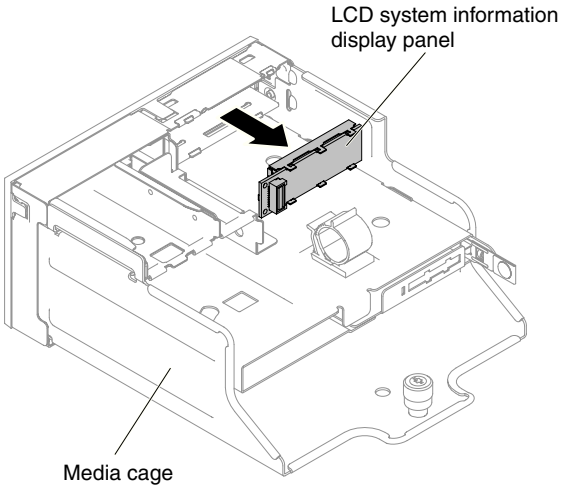


*Figure 197. LCD system information display panel removal*

9. If you are instructed to return the LCD system information display panel, follow all packaging instructions, and use any packaging materials for shipping that are supplied to you.

## Replacing the LCD system information display panel

Use this information to replace the LCD system information display panel.

### About this task

**Removing the LCD panel assembly on a 3.5-inch model**

To install the LCD panel assembly on a 3.5-inch model, complete the following steps.

1. Read the safety information that begins on "Safety" on page vii and "Installation guidelines" on page 283.
2. Turn off the server and peripheral devices and disconnect the power cords and all external cables, if necessary.
3. Remove the top cover (see "Removing the top cover" on page 146).
4. Remove the fan cage assembly"Removing the fan cage assembly" on page 172).
5. **1** Pull the tab on the LCD retention bracket to the left to disengage the retention bracket. **2** Rotate the retention bracket to remove it from the server.

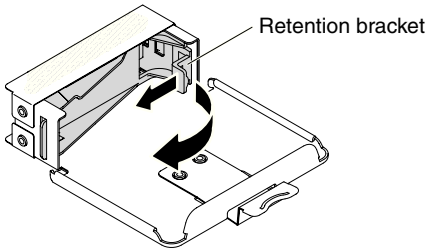


*Figure 198. Retention bracket removal*

6. Carefully insert the LCD system information display panel into place.

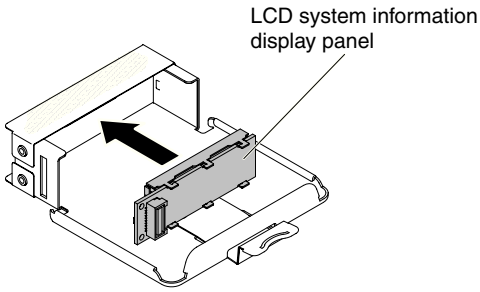


*Figure 199. LCD system information display panel installation*

7. Hinge the retention bracket into the slot on the LCD panel assembly and rotate it until it clicks into place.

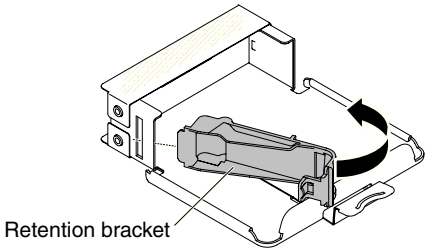


*Figure 200. Retention bracket installation*

8. Connect the cable to the rear of the LCD system information display panel.
9. Slide the LCD panel assembly into the server until it clicks into place.

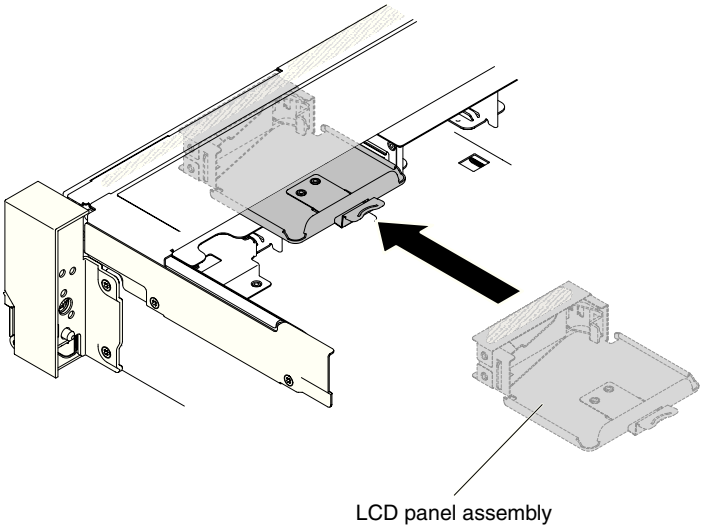


*Figure 201. LCD panel assembly installation*

10. Connect the LCD panel assembly cable to the system board.

    The following illustration shows the cable routing for the LCD panel assembly.

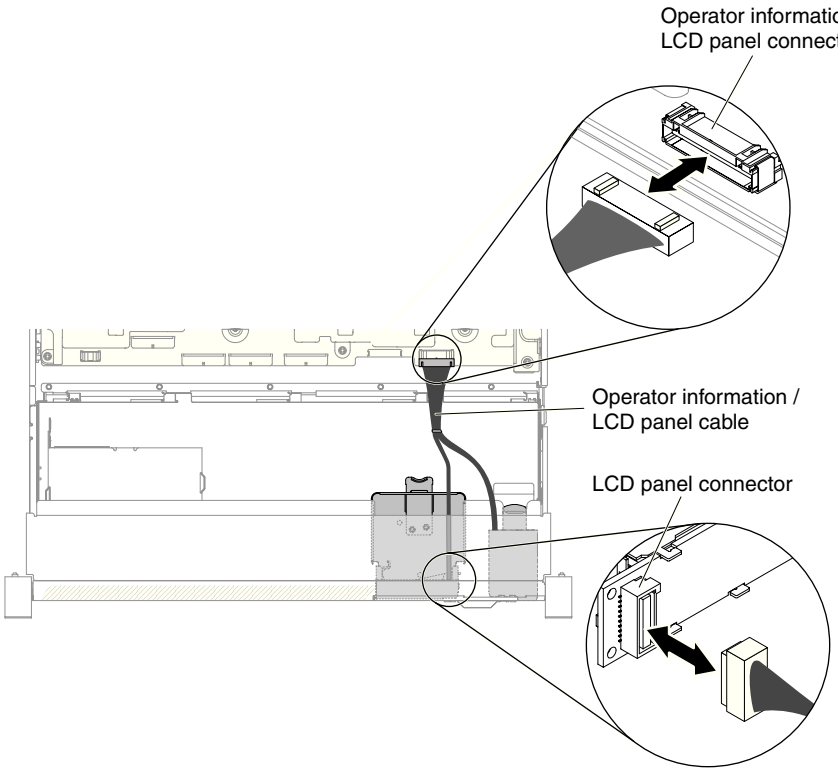


*Figure 202. LCD panel assembly cable routing*

**Note:** To connect the LCD panel assembly cable on the system board, press evenly on the cable. Pressing on one side of the cable might cause damage to the cable or connector.

11. Replace the top cover (see "Replacing the top cover" on page 147).
12. Slide the server into the rack.
13. Reconnect the power cords and any cables that you removed.
14. Turn on the peripheral devices and the server.

**Removing the LCD system information display panel on a 2.5-inch model**

To install the LCD system information display panel into a media cage that is pre-configured without a LCD system information display panel on a 2.5-inch model, complete the following steps.

1. Read the safety information that begins on "Safety" on page vii and "Installation guidelines" on page 283.
2. Turn off the server and peripheral devices and disconnect the power cords and all external cables, if necessary.
3. Remove the top cover (see "Removing the top cover" on page 146).
4. Remove the fan cage assembly"Removing the fan cage assembly" on page 172).
5. Remove the media cage (see "Removing the media cage" on page 176),
6. A separate bezel is needed if your media cage has a bezel without the opening and buttons for the LCD panel, To remove the media cage bezel, complete the following steps:

a. Disengage the three snaps on the media cage bezel from the media cage. The following illustration shows the location of three snaps.

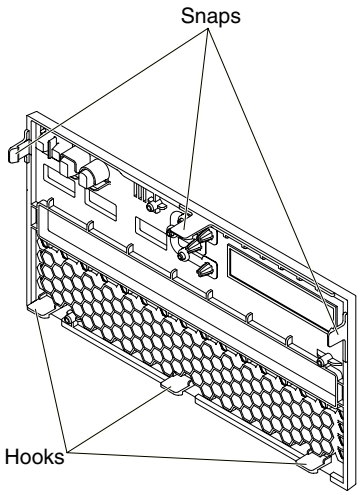


*Figure 203. Snaps (the rear side of the media cage)*

b. Lift the bezel upwards; then, pivot and rotate the bezel along the hooks to remove it from the media cage.

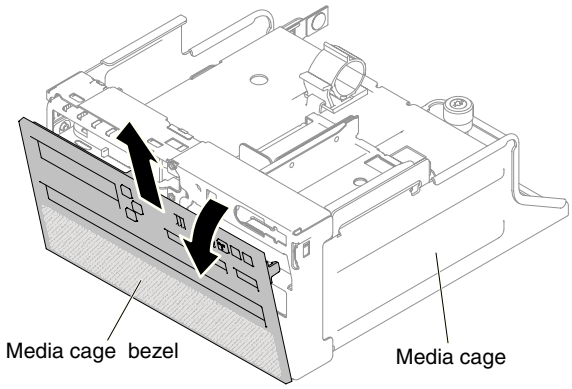


*Figure 204. Media cage bezel removal*

7. **1** Pull the tab on the LCD retention bracket to the left to disengage the retention bracket. **2** Rotate the retention bracket to remove it from the server.

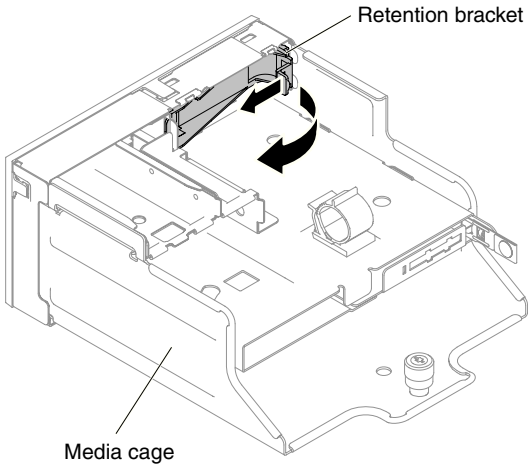


*Figure 205. Retention bracket removal*

8. Carefully insert the LCD system information display panel into place.

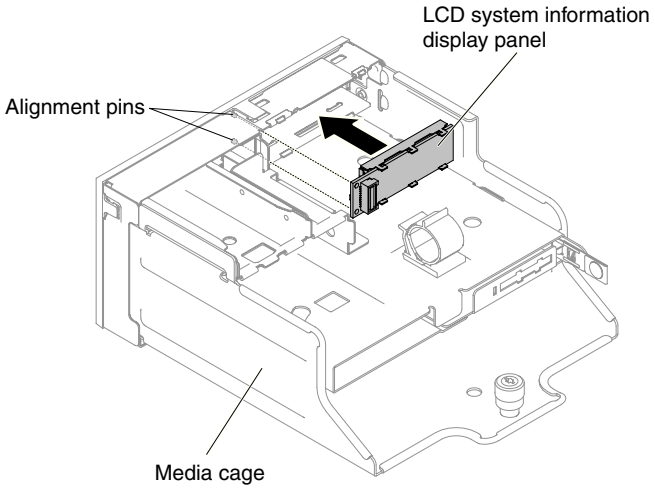


*Figure 206. LCD system information display panel installation*

9. Insert the retention bracket into the slot on the media cage and push it until it clicks into place.

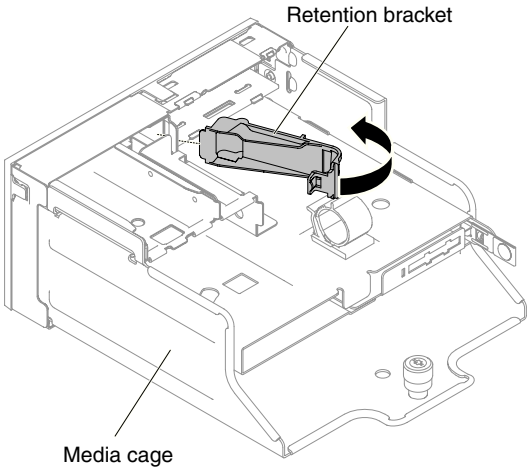


*Figure 207. Retention bracket installation*

10. If you have removed the media cage bezel, install the new media cage bezel with LCD opening and buttons. Angle the media cage bezel and insert the three hooks on the rear side of the media cage bezel into slots on the media cage. The following illustration shows the location of three hooks.

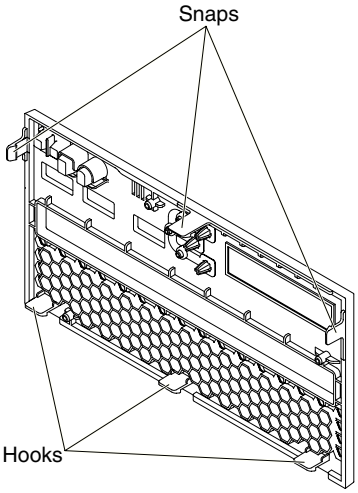


*Figure 208. Hooks (the rear side of the media cage)*

11. Rotate the media cage bezel and snap it into place.

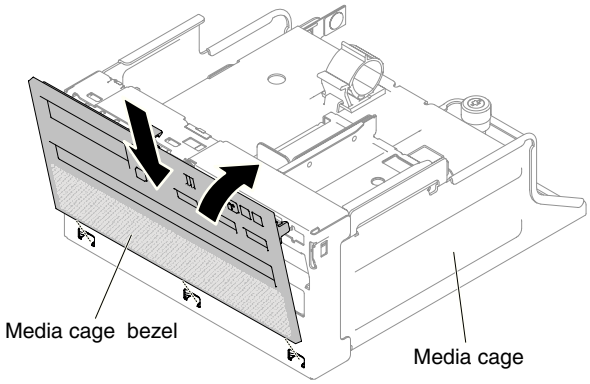


*Figure 209. Retention bracket installation*

12. Install the media cage (see "Replacing the media cage" on page 178).
13. Replace the top cover (see "Replacing the top cover" on page 147).
14. Slide the server into the rack.
15. Reconnect the power cords and any cables that you removed.
16. Turn on the peripheral devices and the server.

## Removing the operator information panel assembly

Use this information to remove the operator information panel assembly.

### About this task

To remove the operator information panel, complete the following steps.

### Procedure

1. Read the safety information that begins on "Safety" on page vii and "Installation guidelines" on page 283.
2. Turn off the server and peripheral devices and disconnect the power cords and all external cables, if necessary.
3. Remove the top cover (see "Removing the top cover" on page 146).
4. Disconnect the cable from the back of the operator information panel assembly.
5. **1** Pull up the release tab slightly and **2** slide the operator information panel assembly out of the server.

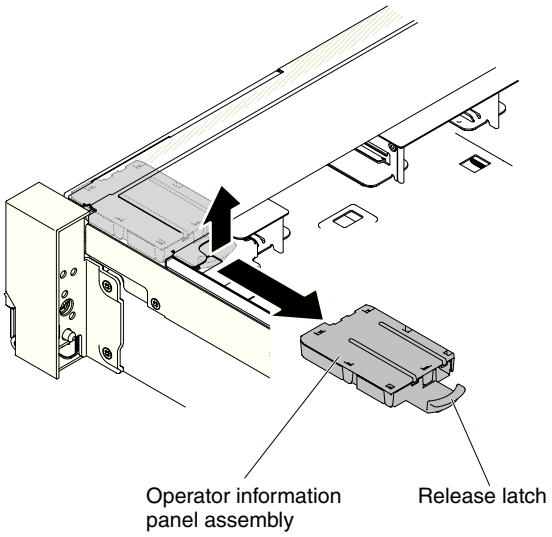


*Figure 210. Operator information panel removal*

6. If you are instructed to return the operator information panel assembly, follow all packaging instructions, and use any packaging materials for shipping that are supplied to you.

## Replacing the operator information panel assembly

Use this information to replace the operator information panel assembly.

### About this task

To install the operator information panel, complete the following steps.

### Procedure

1. Read the safety information that begins on "Safety" on page vii and "Installation guidelines" on page 283.
2. Turn off the server and peripheral devices and disconnect the power cords and all external cables, if necessary.
3. Remove the top cover (see "Removing the top cover" on page 146).
4. Slide the operator information panel into the server until it clicks into place.

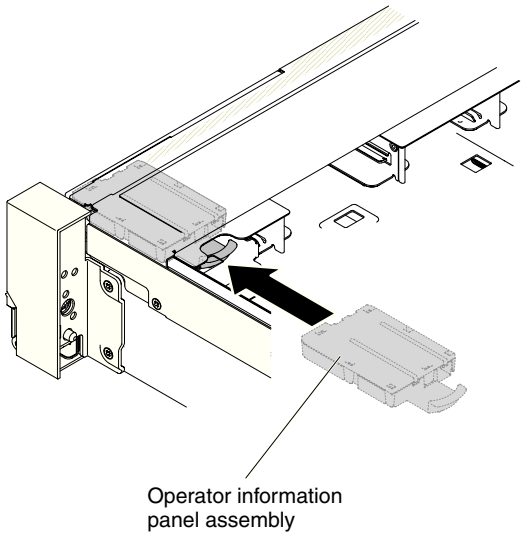


*Figure 211. Operator information panel installation*

5. Inside the server, connect the operator information panel assembly cable to the system board.

   The following illustration shows the cable routing for the operator information panel.

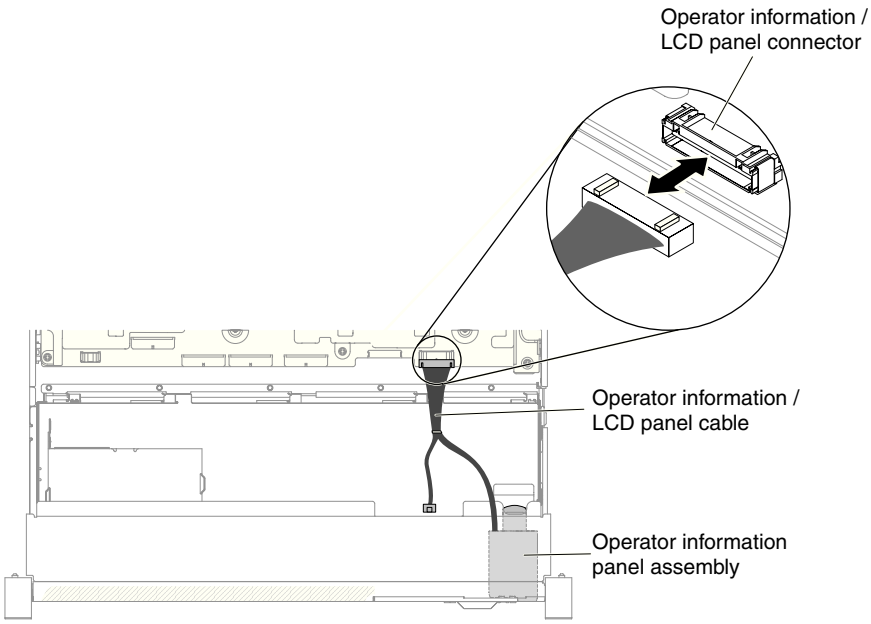


*Figure 212. Operator information panel cable routing*

   **Note:** To connect the operator information panel cable on the system board, press evenly on the cable. Pressing on one side of the cable might cause damage to the cable or connector.

6. Replace the top cover (see "Replacing the top cover" on page 147).
7. Slide the server into the rack.
8. Reconnect the power cords and any cables that you removed.
9. Turn on the peripheral devices and the server.

## Removing the security bezel

Use this information to remove the security bezel.

### About this task

To remove the security bezel, complete the following steps.

### Procedure

1. Read the safety information that begins on “Safety” on page vii and “Installation guidelines” on page 283.
2. Unlock the security bezel, if needed.
3. **1** Press the release latch and **2** rotate the security bezel to disengage the security bezel from the chassis.

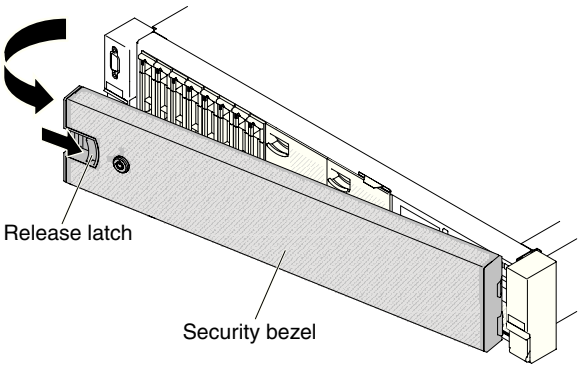


*Figure 213. Security bezel removal*

4. If you are instructed to return the security bezel, follow all packaging instructions, and use any packaging materials for shipping that are supplied to you.

## Replacing the security bezel

Use this information to replace the security bezel.

### About this task

To replace the security bezel, complete the following steps:

### Procedure

1. Read the safety information that begins on “Safety” on page vii and “Installation guidelines” on page 283.
2. **1** Carefully insert the right end of the security bezel into the slots along the right side of the chassis.
3. **2** Rotate the security bezel until the other side clicks into place on the chassis.

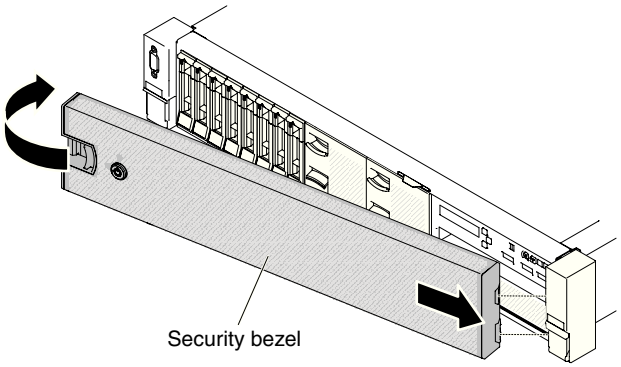


*Figure 214. Security bezel installation*

4. Use the key to lock the bezel if required.

### Results

If you have other devices to install or remove, do so now. Otherwise, go to Completing the installation.

## Removing and replacing Tier 2 CRUs

You may install a Tier 2 CRU yourself or request IBM to install it, at no additional charge, under the type of warranty service that is designated for your server.

The illustrations in this document might differ slightly from your hardware.

### Removing a microprocessor and heat sink

Use this information to remove a microprocessor and heat sink.

#### About this task

**Attention:**

- Microprocessors are to be removed only by trained technicians.

  **Important:** Always use the microprocessor installation tool to remove a microprocessor. Failing to use the microprocessor installation tool may damage the microprocessor sockets on the system board. Any damage to the microprocessor sockets may require replacing the system board.
- Do not allow the thermal grease on the microprocessor and heat sink to come in contact with anything. Contact with any surface can compromise the thermal grease and the microprocessor socket.
- Dropping the microprocessor during installation or removal can damage the contacts.
- Do not touch the microprocessor contacts; handle the microprocessor by the edges only. Contaminants on the microprocessor contacts, such as oil from your skin, can cause connection failures between the contacts and the socket.

Installation tool has two settings for installing two different sizes of microprocessors. The settings that are marked on the tool are “L” for smaller low core microprocessors, and “H” for larger high core microprocessors.

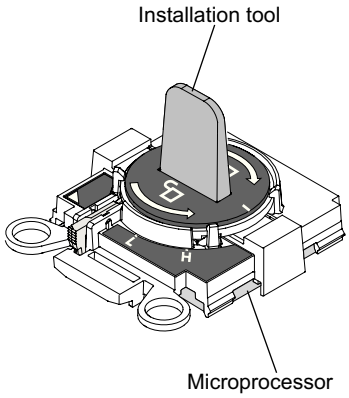


*Figure 215. Microprocessor installation tools*

To remove a microprocessor and heat sink, complete the following steps:

## Procedure

1. Read the safety information that begins on “Safety” on page vii and “Installation guidelines” on page 283.
2. Turn off the server and peripheral devices and disconnect all power cords.
3. Remove the top cover (see “Removing the top cover” on page 146).
4. Remove the air baffle (see “Removing the air baffle” on page 148).
5. Locate the microprocessor to be removed (see “System-board internal connectors” on page 29).
6. If you are removing microprocessor 1, remove the memory modules from DIMM connectors 6 and 7. If you are removing microprocessor 2, remove the memory modules from DIMM connectors 18 and 19. See “Removing a memory module” on page 166 for instructions.⌂
7. Remove the heat sink.

   **Attention:** Do not touch the thermal material on the bottom of the heat sink. Touching the thermal material will contaminate it. If the thermal material on the microprocessor or heat sink becomes contaminated, you must wipe off the contaminated thermal material on the microprocessor or heat sink with the alcohol wipes and reapply clean thermal grease to the heat sink.

   a. Open the heat sink retention module release lever to the fully open position.

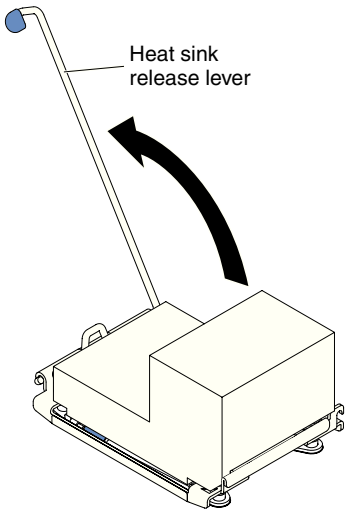


*Figure 216. Heat sink retention module release lever*

b. Lift the heat sink out of the server. After removal, place the heat sink (with the thermal grease side up) on a clean, flat surface.

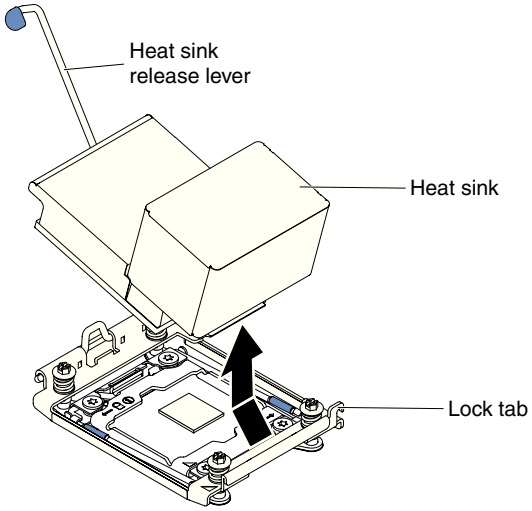


*Figure 217. Heat sink removal*

8. Open the microprocessor socket release levers and retainer.

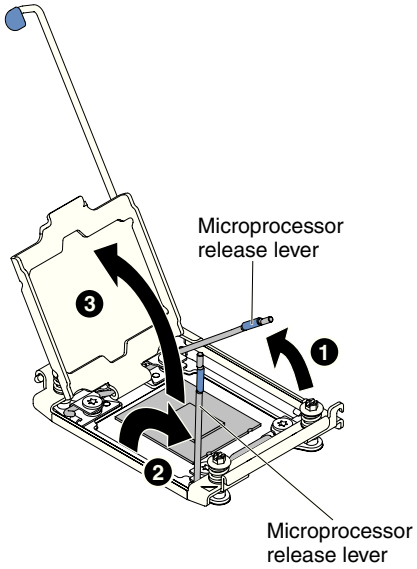


*Figure 218. Microprocessor socket levers and retainer disengagement*

a. Identify which release lever is labeled as the first release lever to open and open it.
b. Open the second release lever on the microprocessor socket.
c. Open the microprocessor retainer.

   **Attention:** Do not touch the microprocessor contacts. Contaminants on the microprocessor contacts, such as oil from your skin, can cause connection failures between the contacts and the socket.

9. Remove the microprocessor from the socket.
   a. Select the empty installation tool and ensure that the handle is in the unlocked position. If the installation tool handle is not in the unlocked position, use the following instructions for your installation tool:
      - **1** lift the interlock latch and hold it up while you **2** twist the microprocessor installation tool handle counterclockwise to the unlocked position, and then release the interlock latch. The following illustration of the installation tool shows the location of the interlock latch and counterclockwise rotation of the handle before loading the microprocessor.

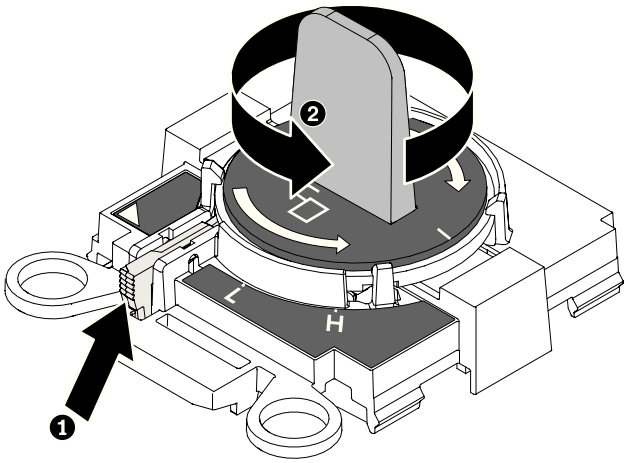


*Figure 219. Installation tool handle adjustment*

The following illustrations show the installation tool in the locked and unlocked positions.

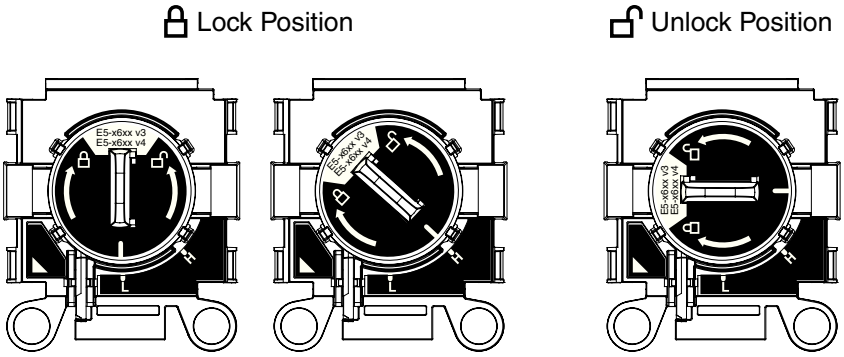


*Figure 220. Locked and unlocked positions*

b. Align the installation tool with the screws, as shown in the following graphic, and lower the installation tool on the microprocessor. The installation tool rests flush on the socket only when it is aligned correctly.

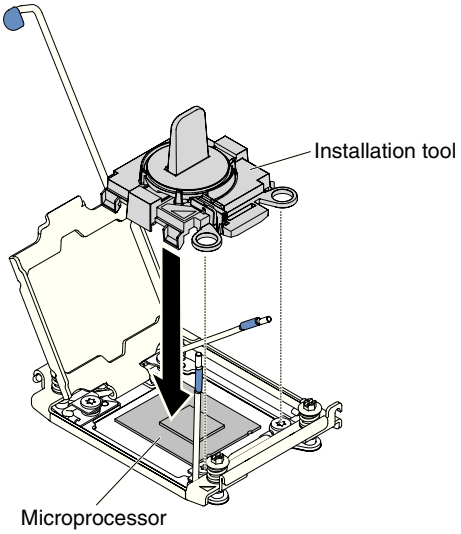


*Figure 221. Installation tool alignment*

c. To remove the microprocessor, gently twist the handle of the installation tool clockwise until it locks in the "H" or "L" position, depending on the size of microprocessor, and then lift the microprocessor out of the socket.

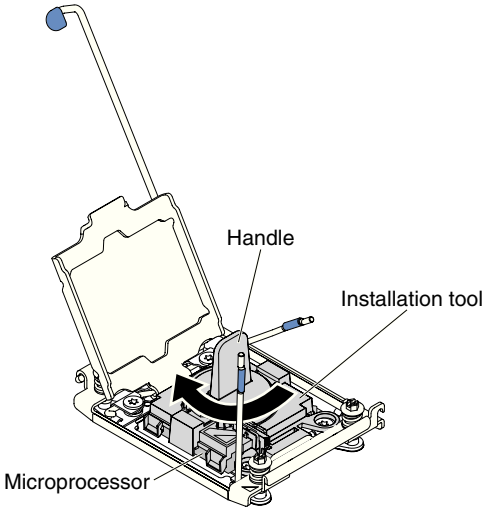


*Figure 222. Installation tool handle adjustment*

d. Lift the microprocessor out of the socket.

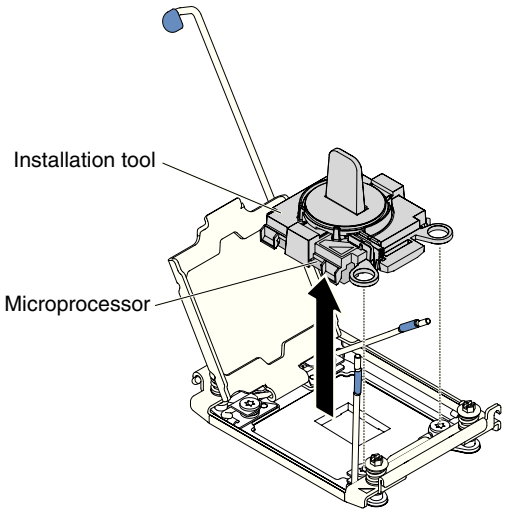


*Figure 223. Installation tool removal*

10. If you do not intend to install a microprocessor on the socket, install the socket cover that you removed in step 9 on page 269 on the microprocessor socket.

    **Attention:** The pins on the socket are fragile. Any damage to the pins may require replacing the system board.

11. If you are instructed to return the microprocessor, follow all packaging instructions, and use any packaging materials for shipping that are supplied to you.

## Replacing a microprocessor and heat sink

Use this information to replace a microprocessor and heat sink.

### About this task

The following notes describe the type of microprocessor that the server supports and other information that you must consider when you install a microprocessor and heat sink:

- Microprocessors are to be installed only by trained technicians.

  **Important:** Always use the microprocessor installation tool to install a microprocessor. Failing to use the microprocessor installation tool may damage the microprocessor sockets on the system board. Any damage to the microprocessor sockets may require replacing the system board.
- The server supports up to two Intel Xeon™ E5-2600 v3 series multi-core microprocessors, which are designed for the LGA 2011 socket. See http://www.ibm.com/systems/info/x86servers/serverproven/compat/us/ for a list of supported microprocessors.
- Do not mix microprocessors with different cores in the same server.
- The first microprocessor must always be installed in microprocessor socket 1 on the system board.
- When one microprocessor is installed, the air baffle must be installed to provide proper system cooling.
- Do not remove the first microprocessor from the system board when you install the second microprocessor.

- When you install the second microprocessor, you must also install additional memory and the fourth fan. See “Installing a memory module” on page 167 for details about the installation sequence.
- To ensure proper server operation when you install an additional microprocessor, use microprocessors that have the same QuickPath Interconnect (QPI) link speed, integrated memory controller frequency, core frequency, power segment, internal cache size, and type.
- Mixing microprocessors of different stepping levels within the same server model is supported.
- When mixing microprocessors with different stepping levels within the same server model, you do not have to install the microprocessor with lowest stepping level and features in microprocessor socket 1.
- Both microprocessor voltage regulator modules are integrated on the system board.
- Read the documentation that comes with the microprocessor to determine whether you have to update the server firmware. To download the latest level of server firmware and other code updates for your server, go to http://www.ibm.com/supportportal/.
- The microprocessor speeds are automatically set for this server; therefore, you do not have to set any microprocessor frequency-selection jumpers or switches.
- If the thermal-grease protective cover (for example, a plastic cap or tape liner) is removed from the heat sink, do not touch the thermal grease on the bottom of the heat sink or set down the heat sink. For more information about applying or working with thermal grease, see “Thermal grease” on page 273.

  **Note:** Removing the heat sink from the microprocessor destroys the even distribution of the thermal grease and requires replacing the thermal grease.
- To order an additional optional microprocessor, contact your IBM sales representative or IBM reseller.

Installation tool has two settings for installing two different sizes of microprocessors. The settings that are marked on the tool are “L” for smaller low core microprocessors, and “H” for larger high core microprocessors.

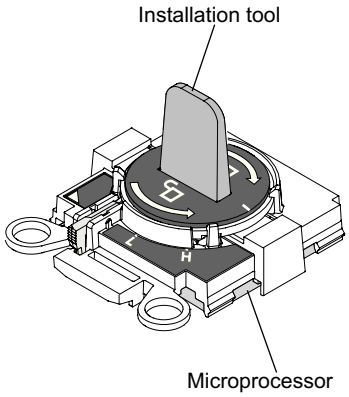


*Figure 224. Microprocessor installation tools*

To replace a microprocessor and heat sink, complete the following steps:

## Procedure

1. Read the safety information that begins on “Safety” on page vii and “Installation guidelines” on page 283.
2. Turn off the server and peripheral devices and disconnect the power cords and all external cables.

   **Attention:** When you handle static-sensitive devices, take precautions to avoid damage from static electricity. For details about handling these devices, see “Handling static-sensitive devices” on page 285.
3. Remove the top cover (see “Removing the top cover” on page 146).
4. Remove the air baffle (see “Removing the air baffle” on page 148).
5. If you are replacing microprocessor 1, remove the memory modules from DIMM connectors 6 and 7. If you are replacing microprocessor 2, remove the memory modules from DIMM connectors 18 and 19. See “Removing a memory module” on page 166 for instructions.⌂
6. Rotate the heat sink retention module release lever to the open position.

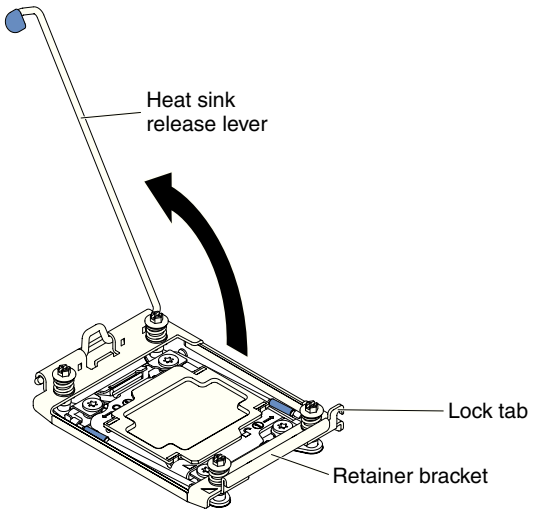


*Figure 225. Heat-sink lever rotation*

7. Open the microprocessor socket release levers and retainer:

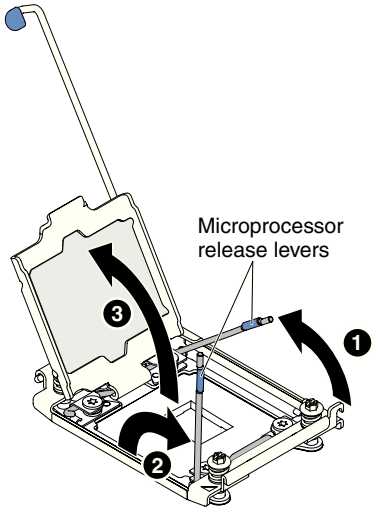


*Figure 226. Microprocessor socket levers and retainer disengagement*

a. Identify which release lever is labeled as the first release lever to open and open it.
b. Open the second release lever on the microprocessor socket.
c. Open the microprocessor retainer.

   **Attention:** Do not touch the connectors on the microprocessor and the microprocessor socket.

8. Install the microprocessor on the microprocessor socket:
   a. Touch the static-protective package that contains the new microprocessor to any *unpainted* on the chassis or any *unpainted* metal surface on any other grounded rack component; then, carefully remove the microprocessor from the package.

      **Note:** Do not touch the microprocessor contacts. Contaminants on the microprocessor contacts, such as oil from your skin, can cause connection failures between the contacts and the socket.
   b. Align the installation tool with the microprocessor socket and lower down the installation tool. The installation tool rests flush on the socket only if properly aligned.

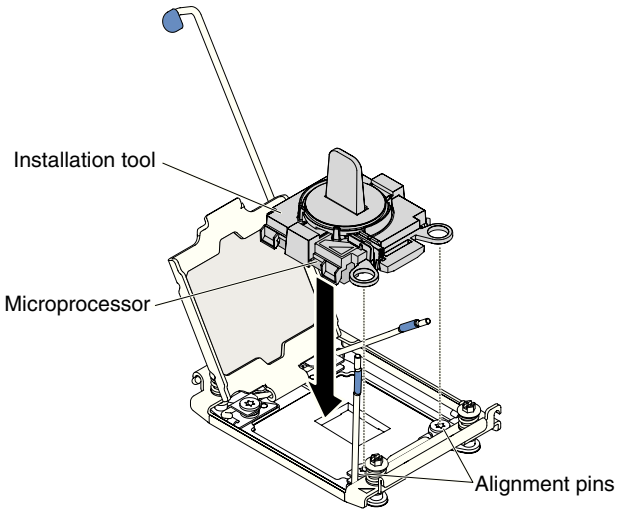


*Figure 227. Installation tool alignment*

c. Install the microprocessor using the following instructions for your installation tool.
   - Twist the handle of the installation tool assembly counterclockwise to the unlocked position until you can not twist the handle any further; then, lift the installation tool out of the socket.

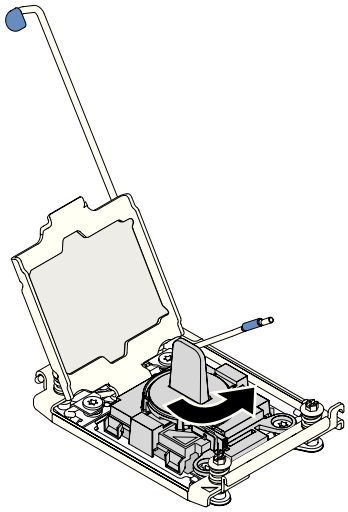

*Figure 228. Installation tool handle adjustment*

The following illustrations show the installation tool in the locked and unlocked positions.

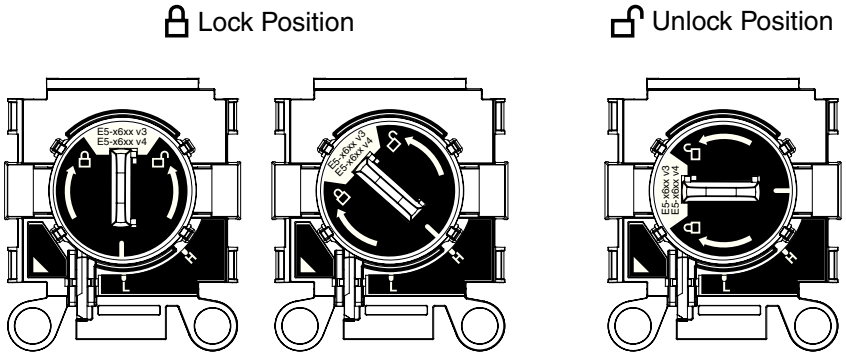


*Figure 229. Installation tool*

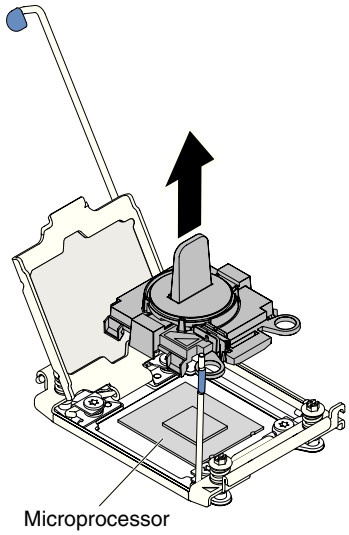


*Figure 230. Installation tool removal*

**Attention:**

- Do not press the microprocessor into the socket.
- Make sure that the microprocessor is oriented and aligned correctly in the socket before you try to close the microprocessor retainer.
- Do not touch the thermal material on the bottom of the heat sink or on top of the microprocessor. Touching the thermal material will contaminate it.

9. Remove the cover from the retainer bracket, if one is present. Store the cover in a safe place.

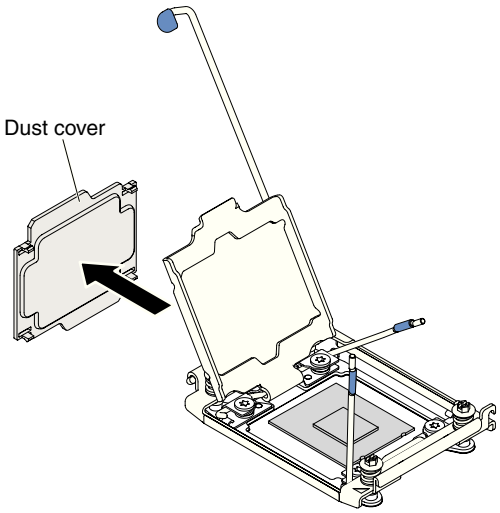


*Figure 231. Socket cover removal*

**Attention:** When you handle static-sensitive devices, take precautions to avoid damage from static electricity. For details about handling these devices, see "Handling static-sensitive devices" on page 285.

10. Close the microprocessor socket release levers and retainer:

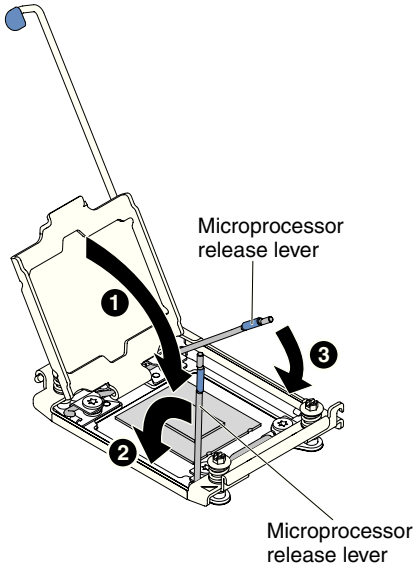


*Figure 232. Microprocessor socket levers and retainer engagement*

a. Close the microprocessor retainer on the microprocessor socket.
b. Identify which release lever is labeled as the first release lever to close and close it.
c. Close the second release lever on the microprocessor socket.

11. Install the heat sink.

**Attention:**

- Do not set down the heat sink after you remove the plastic cover.
- Do not touch the thermal grease on the bottom of the heat sink after you remove the plastic cover. Touching the thermal grease will contaminate it. See "Thermal grease" on page 273 for more information.

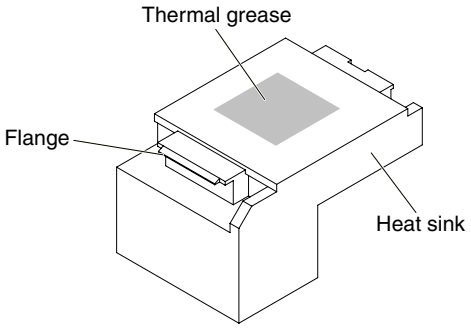


*Figure 233. Thermal grease*

a. Remove the plastic protective cover from the bottom of the heat sink.
b. Grasp the heat sink firmly as the following illustration to avoid possible damage to the heat sink.

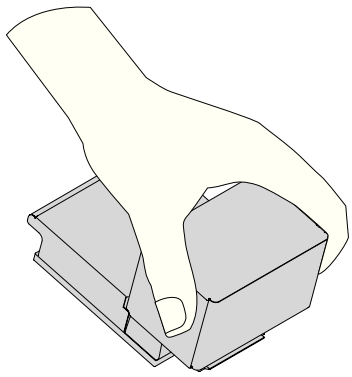

*Figure 234. Heat sink*

c. Position the heat sink over the microprocessor. The heat sink is keyed to assist with proper alignment.

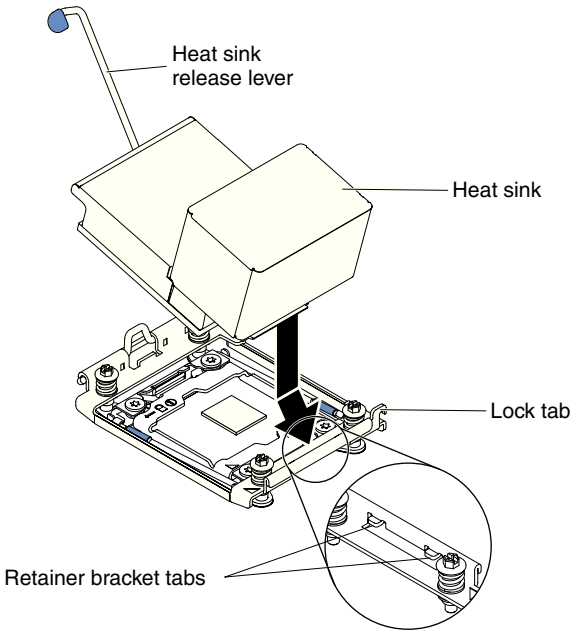


*Figure 235. Heat sink installation*

d. Align and insert the front tab of the heat sink under the retainer bracket tabs.
e. Align and place the heat sink on top of the microprocessor in the retention bracket, thermal material side down.
f. Press firmly on the heat sink.
g. Rotate the heat sink retention module release lever to the closed position and hook it underneath the lock tab.

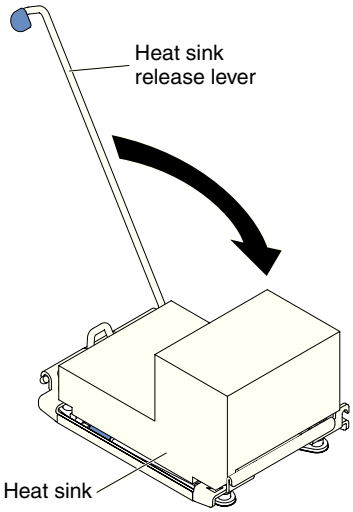


*Figure 236. Heat sink retention module release lever*

12. Reinstall the air baffle (see "Replacing the air baffle" on page 149).
13. Install the top cover (see "Replacing the top cover" on page 147).
14. Slide the server into the rack.
15. Reconnect the power cords and any cables that you removed.

16. Turn on the peripheral devices and the server.

## Results

**Thermal grease:**

The thermal grease must be replaced whenever the heat sink has been removed from the top of the microprocessor and is going to be reused or when debris is found in the grease. Use this information to replace damaged or contaminated thermal grease on the microprocessor and heat sink.

**About this task**

When you are installing the heat sink on the same microprocessor that it was removed from, make sure that the following requirements are met:

- The thermal grease on the heat sink and microprocessor is not contaminated.
- Additional thermal grease is not added to the existing thermal grease on the heat sink and microprocessor.

**Notes:**

- Read the safety information that begins on "Safety" on page vii.
- Read the "Installation guidelines" on page 283.
- Read "Handling static-sensitive devices" on page 285.

To replace damaged or contaminated thermal grease on the microprocessor and heat sink, complete the following steps:

**Procedure**

1. Place the heat sink on a clean work surface.
2. Remove the cleaning pad from its package and unfold it completely.
3. Use the cleaning pad to wipe the thermal grease from the bottom of the heat sink.

   **Note:** Make sure that all of the thermal grease is removed.
4. Use a clean area of the cleaning pad to wipe the thermal grease from the microprocessor; then, dispose of the cleaning pad after all of the thermal grease is removed.
5. Use the thermal-grease syringe to place 9 uniformly spaced dots of 0.02 mL each on the top of the microprocessor. The outermost dots must be within approximately 5 mm of the edge of the microprocessor; this is to ensure uniform distribution of the grease.

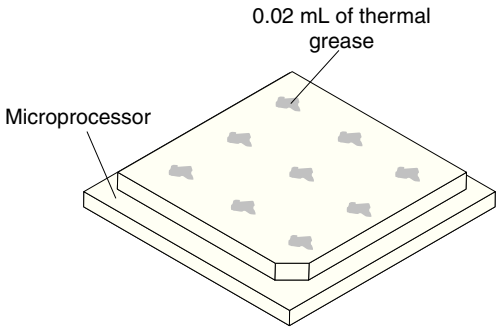


*Figure 237. Thermal grease distribution*

**Note:** If the grease is properly applied, approximately half of the grease will remain in the syringe.

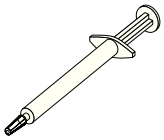

*Figure 238. Syringe*

6. Install the heat sink onto the microprocessor as described in 11 on page 270.

## Removing the heat-sink retention module

Use this information to remove the heat-sink retention module.

### About this task

To remove a heat-sink retention module, complete the following steps:

### Procedure

1. Read the safety information that begins on "Safety" on page vii and "Installation guidelines" on page 283.
2. Turn off the server and peripheral devices and disconnect the power cords and all external cables.
3. Remove the top cover (see "Removing the top cover" on page 146).
4. Remove the air baffle (see "Removing the air baffle" on page 148).
5. Remove the heat sink (see "Removing a microprocessor and heat sink" on page 258).

   **Attention:** When you remove a microprocessor and heat sink, be sure to keep each heat sink with its microprocessor for reinstallation.
6. Use a screwdriver and remove the four screws that secure the retention module to the system board; then, lift the retention module from the system board.

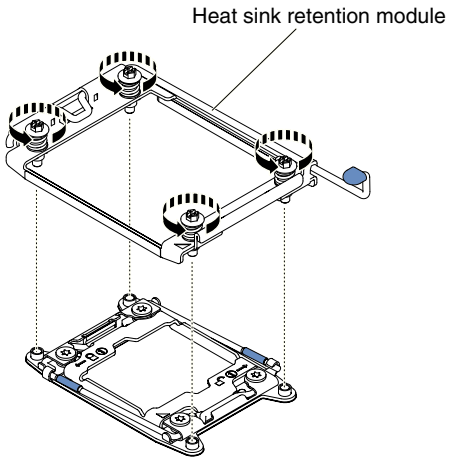


*Figure 239. Heat-sink retention module removal*

7. If you are instructed to return the heat-sink retention module, follow all the packaging instructions, and use any packaging materials for shipping that are supplied to you.

## Replacing the heat-sink retention module

Use this information to replace the heat-sink retention module.

### About this task

To install a heat-sink retention module, complete the following steps:

### Procedure

1. Read the safety information that begins on “Safety” on page vii and “Installation guidelines” on page 283.
2. Turn off the server and peripheral devices and disconnect the power cords and all external cables.
3. Remove the top cover (see “Removing the top cover” on page 146).
4. Remove the air baffle (see “Removing the air baffle” on page 148).
5. Align the retention module with the holes on the system board.
6. Use a screwdriver to reinstall the four screws.

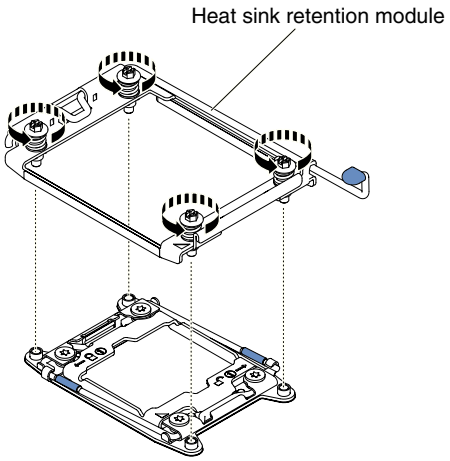


*Figure 240. Heat-sink retention module installation*

7. Reinstall the heat sink (see “Replacing a microprocessor and heat sink” on page 264).

   **Attention:** Make sure that you install each heat sink with its paired microprocessor.
8. Reinstall the air baffle (see “Replacing the air baffle” on page 149).
9. Install the top cover (see “Replacing the top cover” on page 147).
10. Slide the server into the rack.
11. Reconnect the power cords and any cables that you removed.
12. Turn on the peripheral devices and the server.

## Removing the system board

Use this information to remove the system board.

### About this task

**Notes:**

1. When you replace the system board, you must either update the server with the latest firmware or restore the pre-existing firmware that the customer provides on a diskette or CD image. Make sure that you have the latest firmware or a copy of the pre-existing firmware before you proceed.
2. When you replace the system board, make sure that you remove the Integrated Management Module Advanced Upgrade and place it on the new system board. For information about the Advanced Upgrade, see “Using the remote presence and blue-screen capture features” on page 57.
3. Before you replace the system board, make sure that you back up any features on demand (FoD) keys that were enabled. Reactivate any Features on Demand features. Instructions for automating the activation of features and installing activation keys is in the *IBM Features on Demand User’s Guide*. To download the document, go to /http://www.ibm.com/systems/x/fod/, log in, and click **Help**.

To remove the system board, complete the following steps:

## Procedure

1. Read the safety information that begins on "Safety" on page vii, "Handling static-sensitive devices" on page 285, and "Installation guidelines" on page 283.
2. Turn off the server and any attached devices.
3. Turn off the peripheral devices and disconnect all power cords.

   **Note:** When you replace the system board, you must either update the server with the latest firmware or restore the pre-existing firmware that the customer provides on a diskette or CD image. Make sure that you have the latest firmware or a copy of the pre-existing firmware before you proceed.
4. Pull the power supplies out of the rear of the server, just enough to disengage them from the server.
5. Remove the top cover (see "Removing the top cover" on page 146).
6. Remove all PCI riser-card assemblies and adapters (see "Removing a riser-card assembly" on page 180 and "Removing an adapter" on page 185).
7. Remove the air baffle (see "Removing the air baffle" on page 148).
8. Remove the fan cage assembly (See "Removing the fan cage assembly" on page 172).
9. Remove any backplate assembly or any backplane (See "Removing the 2.5-inch simple-swap backplate assembly/hot-swap hard disk drive backplane" on page 232 and "Removing the 3.5-inch simple-swap backplate assembly/hot-swap hard disk drive backplane" on page 235).
10. Remove the dedicate slotless RAID controller (see "Removing the dedicated slotless RAID controller" on page 183).
11. Remove the paddle card module (see "Removing the power paddle module" on page 150).
12. Remove the memory modules and set them aside on a static-protective surface for reinstallation (see "Removing a memory module" on page 166).

    **Note:** Make a note of the location of each DIMM as you remove it, so that you can later reinstall it in the same connector.
13. (Trained technician only) Remove all heat sinks and microprocessors, and set them aside on a static-protective surface for reinstallation (see "Removing a microprocessor and heat sink" on page 258).

    **Notes:** Do not allow the thermal grease to come in contact with anything, and keep each heat sink paired with its microprocessor for reinstallation. Contact with any surface can compromise the thermal grease and the microprocessor socket. A mismatch between the microprocessor and its original heat sink can require the installation of a new heat sink.
14. Disconnect all cables from the system board. Make a list of each cable as you disconnect it; you can then use this as a checklist when you install the new system board (see "Internal cable routing and connectors" on page 131 for more information).

    **Attention:** Disengage all latches, release tabs or locks on cable connectors when you disconnect all cables from the system board. Failing to release them before removing the cables will damage the cable sockets on the system board. The cable sockets on the system board are fragile. Any damage to the cable sockets may require replacing the system board.

15. **1** Loosen the two thumbscrews (located near the front of the server) that secure the system board to the server and **2** slide the system board toward the front of the server.
16. Grasp both system-board handles and lift up the left side of the system board slightly and carefully remove it from the chassis, being careful not to damage any surrounding components.

    **Note:** Use the system-board handles to lift the system board only. Do not attempt to lift the server using the system board handles.

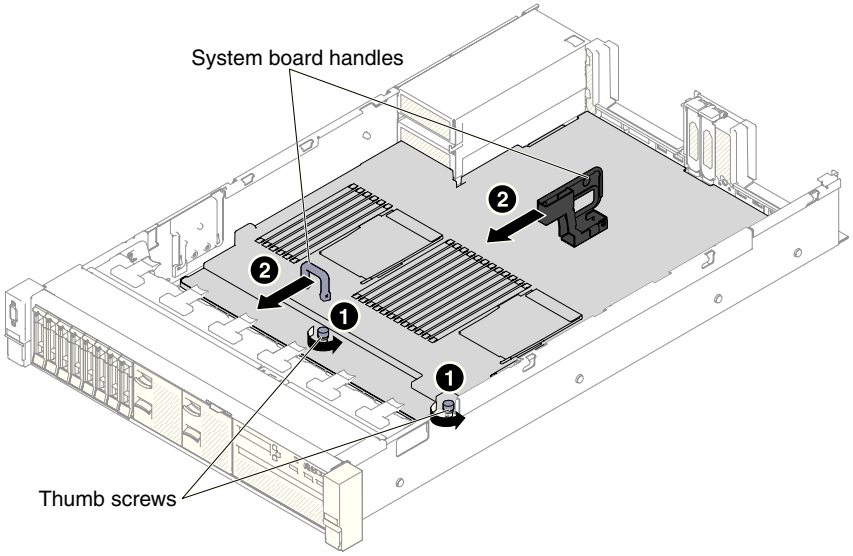


*Figure 241. System board removal*

17. **1** Push the system board toward the broadside of the server and **2** lift the system board up.

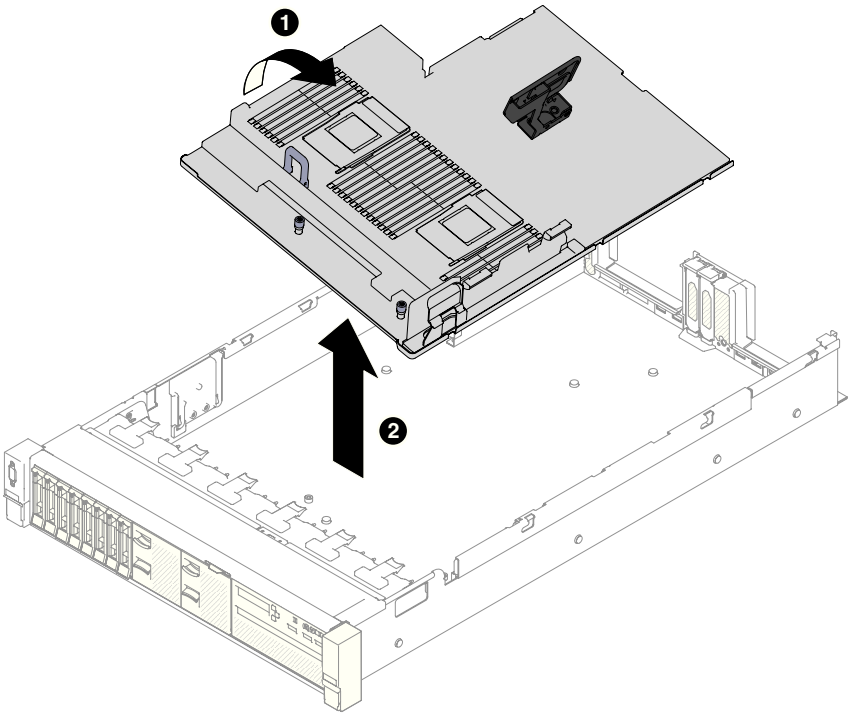


*Figure 242. System board removal*

18. If you are instructed to return the system board, follow all packaging instructions, and use any packaging materials for shipping that are supplied to you.

    **Attention:** Make sure to place the socket covers for the microprocessor sockets on the system board before returning the system board.

## Replacing the system board

Use this information to replace the system board.

### About this task

**Notes:**

1. When you reassemble the components in the server, be sure to route all cables carefully so that they are not exposed to excessive pressure.
2. When you replace the system board, you must either update the server with the latest firmware or restore the pre-existing firmware from a diskette or CD image. Make sure that you have the latest firmware or a copy of the pre-existing firmware before you proceed. See "Updating the firmware" on page 43, "Updating the Universal Unique Identifier (UUID)" on page 64, and "Updating the DMI/SMBIOS data" on page 66 for more information.
3. When you replace the system board, make sure that you remove the Integrated Management Module Advanced Upgrade and place it on the new system board. For information about the Advanced Upgrade, see "Using the remote presence and blue-screen capture features" on page 57.
4. Reactivate any Features on Demand features. Instructions for automating the activation of features and installing activation keys is in the *IBM Features on Demand User's Guide*. To download the document, go to /http://www.ibm.com/systems/x/fod/, log in, and click **Help**.

**Important:** Some cluster solutions require specific code levels or coordinated code updates. If the device is part of a cluster solution, verify that the latest level of code is supported for the cluster solution before you update the code.

To install the system board, complete the following steps:

## Procedure

1. Read the safety information that begins on "Safety" on page vii, "Handling static-sensitive devices" on page 285, and "Installation guidelines" on page 283.
2. Align the system board with the slots on the side of the chassis and lower the right side into the chassis first; then, lower the other side of the system board into the chassis.

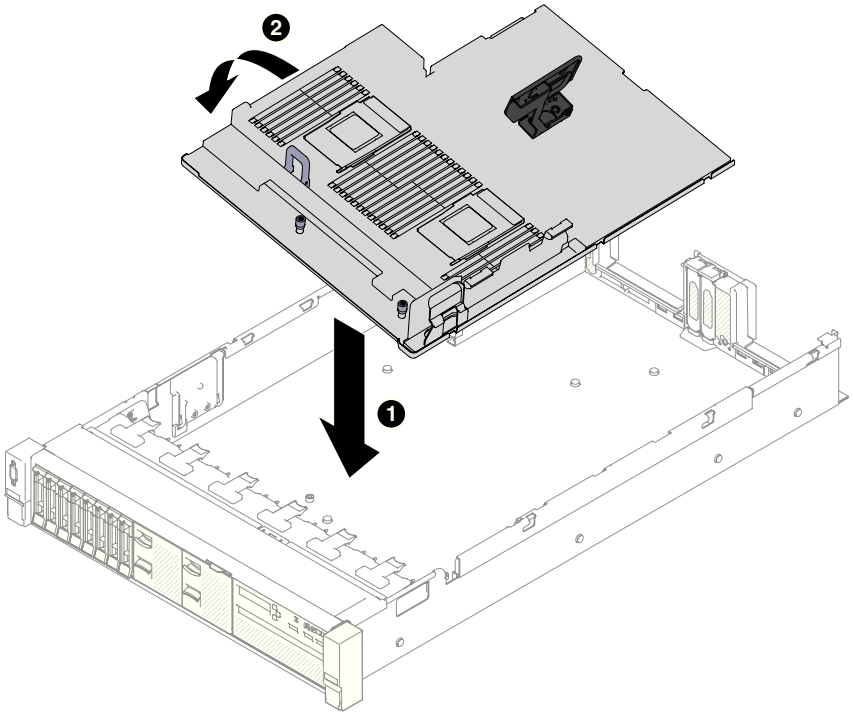


*Figure 243. System board installation*

3. **1** Slide the system-board toward the rear of the server to secure it in place.
4. **2** Tighten the two thumbscrews to secure the system board to the chassis.

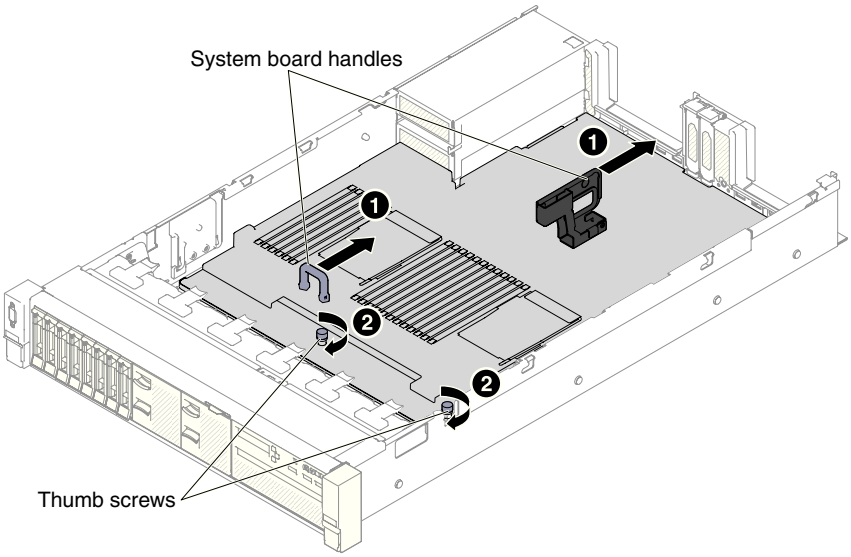


*Figure 244. System board installation*

5. Reconnect to the system board the cables that you disconnected in step 13 of "Removing the system board" on page 276 (see "Internal cable routing and connectors" on page 131).
6. (Trained technician only) Install the microprocessor and heat sink (see "Replacing a microprocessor and heat sink" on page 264).
7. Install the memory modules (see "Installing a memory module" on page 167).
8. If necessary, install the virtual media key.
9. Install the system battery (see "Replacing the system battery" on page 243).
10. Install the PCI riser-card assemblies and adapters, if any were installed (see "Replacing an adapter" on page 190 and "Replacing a riser-card assembly" on page 181).
11. Install the air baffle (see "Replacing the air baffle" on page 149).
12. Install the fan cage assembly (see "Replacing the fan cage assembly" on page 173).
13. Install the top cover (see "Replacing the top cover" on page 147).
14. Push the power supplies back into the server.
15. Slide the server into the rack.
16. Reconnect the power cords and any cables that you removed.
17. Turn on the peripheral devices and the server.
18. Start the Setup utility and reset the configuration.
    - Set the system date and time.
    - Set the power-on password.
    - Reconfigure the server.

    See "Using the Setup utility" on page 48 for more details.
19. Either update the server with the latest RAID firmware or restore the pre-existing firmware from a diskette or CD image.
20. Update the UUID (see "Updating the Universal Unique Identifier (UUID)" on page 64).
21. Update the DMI/SMBIOS (see "Updating the DMI/SMBIOS data" on page 66).

22. Reactivate any Features on Demand features.

## Installing optional devices

This section provides detailed instructions for installing optional hardware devices in the server.

In addition to the instructions in this chapter for installing optional hardware devices, updating the firmware and device drivers, and completing the installation, IBM Business Partners must also complete the steps in "Instructions for IBM Business Partners" on page 303.

**Important:** To help ensure that the devices that you install work correctly and do not introduce problems, observe the following precautions:

1. Make sure that the server and the installed firmware levels support the devices that you are installing. If necessary, update the UEFI and IMM firmware and any other firmware that is stored on the system board. For information about where firmware is stored in the server, see "Updating the firmware" on page 43. For a list of supported optional devices for the server, see http://www.ibm.com/systems/info/x86servers/serverproven/compat/us/.
2. Use the best practices to apply current firmware and device-driver updates for the server and optional devices. To download the "IBM System x Firmware Update Best Practices" document, go to www.ibm.com/support/entry/portal/docdisplay?lndocid=MIGR-5082923&brandind=5000008. Additional hints and tips are available from the following sites:
   - IBM support: http://www.ibm.com/supportportal/
   - System x configuration tools: http://www.ibm.com/systems/x/hardware/configtools.html
3. Before you install optional hardware devices, make sure that the server is working correctly. Start the server and make sure that the operating system starts, if an operating system is installed, or that a 19990305 error code is displayed, indicating that an operating system was not found but the server is otherwise working correctly. If the server is not working correctly, see "Running the DSA Preboot diagnostic programs" on page 86 for information about how to run diagnostics.
4. Follow the installation procedures in this chapter and use the correct tools. Incorrectly installed devices can cause system failure because of damaged pins in sockets or connectors, loose cabling, or loose components.

## Installation guidelines

Use the installation guidelines to install the System x3650 M5 Type 5462.

**Attention:** Static electricity that is released to internal server components when the server is powered-on might cause the system to halt, which might result in the loss of data. To avoid this potential problem, always use an electrostatic-discharge wrist strap or other grounding system when removing or installing a hot-swap device.

Before you install optional devices, read the following information:

- Read the safety information in "Safety" on page vii, the guidelines in "Working inside the server with the power on" on page 285, and "Handling static-sensitive devices" on page 285. This information will help you work safely.
- Make sure that the devices that you are installing are supported. For a list of supported optional devices for the server, see http://www.ibm.com/systems/info/x86servers/serverproven/compat/us/.
- When you install your new server, take the opportunity to download and apply the most recent firmware updates. This step will help to ensure that any known issues are addressed and that your server is ready to function at maximum levels of performance. To download firmware updates for your server, go to http://www.ibm.com/support/fixcentral/.

  **Important:** Some cluster solutions require specific code levels or coordinated code updates. If the device is part of a cluster solution, verify that the latest level of code is supported for the cluster solution before you update the code.

  For additional information about tools for updating, managing, and deploying firmware, see the ToolsCenter for System x and BladeCenter at http://publib.boulder.ibm.com/infocenter/toolsctr/v1r0/.
- Before you install optional hardware, make sure that the server is working correctly. Start the server, and make sure that the operating system starts, if an operating system is installed, or that a 19990305 error code is displayed, indicating that an operating system was not found but the server is otherwise working correctly. If the server is not working correctly, see "Running the DSA Preboot diagnostic programs" on page 86 for information about how to run diagnostics.
- Observe good housekeeping in the area where you are working. Place removed covers and other parts in a safe place.
- Do not attempt to lift an object that you think is too heavy for you. If you have to lift a heavy object, observe the following precautions:
  - Make sure that you can stand safely without slipping.
  - Distribute the weight of the object equally between your feet.
  - Use a slow lifting force. Never move suddenly or twist when you lift a heavy object.
  - To avoid straining the muscles in your back, lift by standing or by pushing up with your leg muscles.
- Make sure that you have an adequate number of properly grounded electrical outlets for the server, monitor, and other devices.
- Back up all important data before you make changes to disk drives.
- Have a small flat-blade screwdriver, a small Phillips screwdriver, and a T8 torx screwdriver available.
- To view the error LEDs on the system board and internal components, leave the server connected to power.

- You do not have to turn off the server to install or replace hot-swap power supplies, hot-swap fans, or hot-plug Universal Serial Bus (USB) devices. However, you must turn off the server before you perform any steps that involve removing or installing adapter cables and you must disconnect the power source from the server before you perform any steps that involve removing or installing a riser card.
- Blue on a component indicates touch points, where you can grip the component to remove it from or install it in the server, open or close a latch, and so on.
- Orange on a component or an orange label on or near a component indicates that the component can be hot-swapped, which means that if the server and operating system support hot-swap capability, you can remove or install the component while the server is running. (Orange can also indicate touch points on hot-swap components.) See the instructions for removing or installing a specific hot-swap component for any additional procedures that you might have to perform before you remove or install the component.
- When you are finished working on the server, reinstall all safety shields, guards, labels, and ground wires.

**System reliability guidelines:**

The system reliability guidelines to ensure proper system cooling.

To help ensure proper system cooling and system reliability, make sure that the following requirements are met:

- Each of the drive bays has a drive or a filler panel and electromagnetic compatibility (EMC) shield installed in it.
- Each of the power-supply bays has a power supply or a filler installed in it.
- If the server has redundant power, each of the power-supply bays has a power supply installed in it.
- There is adequate space around the server to allow the server cooling system to work properly. Leave approximately 50 mm (2.0 in.) of open space around the front and rear of the server. Do not place objects in front of the fans. For proper cooling and airflow, replace the server cover before you turn on the server. Operating the server for extended periods of time (more than 30 minutes) with the server cover removed might damage server components.
- You have followed the cabling instructions that come with optional adapters.
- You have replaced a failed fan within 48 hours.
- You have replaced a hot-swap fan within 30 seconds of removal.
- You have replaced a hot-swap drive within 2 minutes of removal.
- You have replaced a failed hot-swap power supply within 2 minutes of removal.
- You do not operate the server without the air baffle installed. Operating the server without the air baffle might cause the microprocessor to overheat.
- Microprocessor socket 2 always contains either a socket cover or a microprocessor and heat sink.
- You have installed the fifth and sixth fans when you installed the second microprocessor option.

**Working inside the server with the power on:**

Guidelines to work inside the server with the power on.

**Attention:** Static electricity that is released to internal server components when the server is powered-on might cause the server to halt, which might result in the loss of data. To avoid this potential problem, always use an electrostatic-discharge wrist strap or other grounding system when you work inside the server with the power on.

You might have to have the server turned on while the cover is off, to look at LCD system information display panel or replace hot swap components. Follow these guidelines when you work inside a server that is turned on:

- Avoid wearing loose-fitting clothing on your forearms. Button long-sleeved shirts before working inside the server; do not wear cuff links while you are working inside the server.
- Do not allow your necktie or scarf to hang inside the server.
- Remove jewelry, such as bracelets, necklaces, rings, and loose-fitting wrist watches.
- Remove items from your shirt pocket, such as pens and pencils, that could fall into the server as you lean over it.
- Avoid dropping any metallic objects, such as paper clips, hairpins, and screws, into the server.

**Handling static-sensitive devices:**

Use this information to handle static-sensitive devices.

**Attention:** Static electricity can damage the server and other electronic devices. To avoid damage, keep static-sensitive devices in their static-protective packages until you are ready to install them.

To reduce the possibility of damage from electrostatic discharge, observe the following precautions:

- Limit your movement. Movement can cause static electricity to build up around you.
- The use of a grounding system is recommended. For example, wear an electrostatic-discharge wrist strap, if one is available. Always use an electrostatic-discharge wrist strap or other grounding system when working inside the server with the power on.
- Handle the device carefully, holding it by its edges or its frame.
- Do not touch solder joints, pins, or exposed circuitry.
- Do not leave the device where others can handle and damage it.
- While the device is still in its static-protective package, touch it to an unpainted metal surface on the outside of the server for at least 2 seconds. This drains static electricity from the package and from your body.
- Remove the device from its package and install it directly into the server without setting down the device. If it is necessary to set down the device, put it back into its static-protective package. Do not place the device on the server cover or on a metal surface.
- Take additional care when handling devices during cold weather. Heating reduces indoor humidity and increases static electricity.

## Installing a 8x 2.5-inch simple-swap HDD ServeRAID assembly kit

Use this information to install a 8x 2.5-inch simple-swap HDD ServeRAID assembly kit.

### About this task

You can install an IBM System x3650 M5 8x 2.5-inch simple-swap HDD ServeRAID assembly kit to support eight 2.5-inch simple-swap hard disk drives in the server. See http://www.ibm.com/systems/info/x86servers/serverproven/compat/us/ for a list of supported optional devices. To order a 8x 2.5-inch hot-swap HDD assembly kit, contact your IBM sales representative or IBM reseller.

The 8x 2.5-inch simple-swap HDD ServeRAID assembly kit contains the following components:

- One simple-swap backplate assembly

To install a 8x 2.5-inch hot-swap HDD assembly kit, complete the following steps:

### Procedure

1. Read the safety information that begins on "Safety" on page vii and "Installation guidelines" on page 283.
2. Turn off the server and peripheral devices and disconnect the power cords and all external cables, if necessary.
3. Remove the top cover (see "Removing the top cover" on page 146).
4. Remove the two 4-drive filler panels.
5. Pull the hard disk drives or fillers out of the server slightly to disengage them from the backplates. For more information, (see "Removing a simple-swap hard disk drive" on page 157).
6. To obtain more working room, remove the fan cage assembly (see "Removing the fan cage assembly" on page 172).
7. Insert the backplate assembly tabs into slots on the bottom of the cage and push the backplate assembly forward into the release latch (on top of the backplate assembly cage) until the backplate assembly is locked in place.

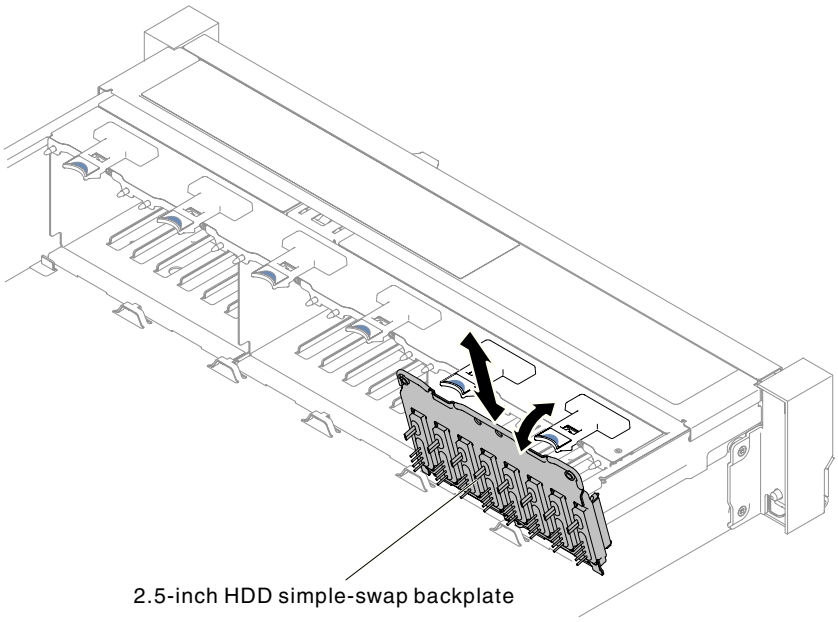


*Figure 245. 2.5-inch simple-swap/hot-swap hard disk drive backplate assembly/backplane installation*

8. Connect the SAS signal and power/configuration cables to the system board.

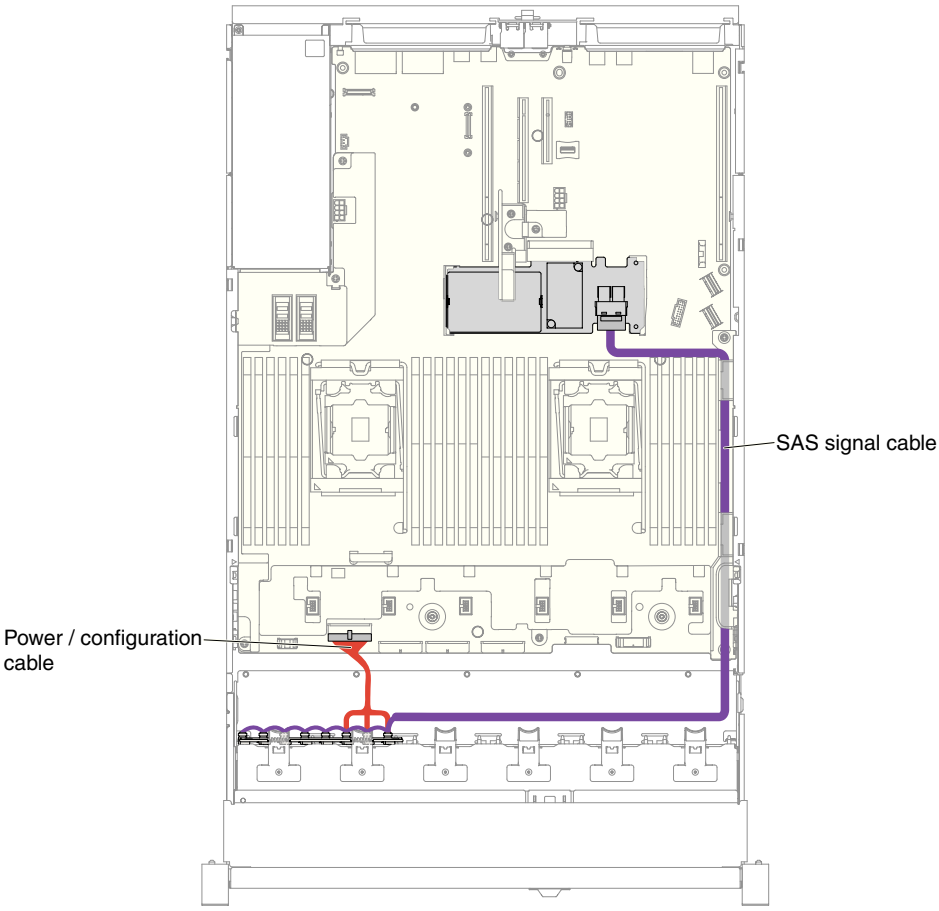


*Figure 246. 8x2.5-inch simple-swap hard disk drive with hardware RAID cabling*

9. Replace the fan cage assembly and fans if you removed them (see "Replacing the fan cage assembly" on page 173 and "Replacing a hot-swap fan" on page 175).
10. Reinstall the hard disk drives (see "Replacing a hot-swap hard disk drive" on page 155).
11. Install the top cover (see "Replacing the top cover" on page 147).
12. Slide the server into the rack.
13. Reconnect the power cords and any cables that you removed.
14. Turn on the peripheral devices and the server.

## Installing a 8x 3.5-inch simple-swap HDD ServeRAID assembly kit

Use this information to install a 8x 3.5-inch simple-swap HDD ServeRAID assembly kit.

### About this task

You can install an IBM System x3650 M5 8x 3.5-inch simple-swap HDD ServeRAID assembly kit to support eight 3.5-inch simple-swap hard disk drive model in the server. See http://www.ibm.com/systems/info/x86servers/serverproven/compat/us/ for a list of supported optional devices. To order a 8x 3.5-inch hot-swap HDD assembly kit, contact your IBM sales representative or IBM reseller.

The 8x 3.5-inch simple-swap HDD ServeRAID assembly kit contains the following components:

- One simple-swap backplate assembly, which contains two cables attached to the backplate assembly

To install a 8x 3.5-inch hot-swap HDD assembly kit, complete the following steps:

### Procedure

1. Read the safety information that begins on "Safety" on page vii and "Installation guidelines" on page 283.
2. Turn off the server and peripheral devices and disconnect the power cords and all external cables, if necessary.
3. Remove the cover (see "Removing the top cover" on page 146).
4. Pull the hard disk drives or fillers out of the server slightly to disengage them from the backplates. For more information, see "Removing a simple-swap hard disk drive" on page 157).
5. To obtain more working room, remove the fan cage (see "Removing the fan cage assembly" on page 172).
6. Remove the 3.5-inch backplate assembly/backplane. See "Removing the 3.5-inch simple-swap backplate assembly/hot-swap hard disk drive backplane" on page 235
7. **1** Insert the backplate assembly/backplane tabs into slots on the bottom of the drive cage at an angle; then, rotate the backplate assembly/backplane toward the front the server
8. **2** Pull the two plungers while you **3** push the backplate assembly to the left to engage the assembly into place.

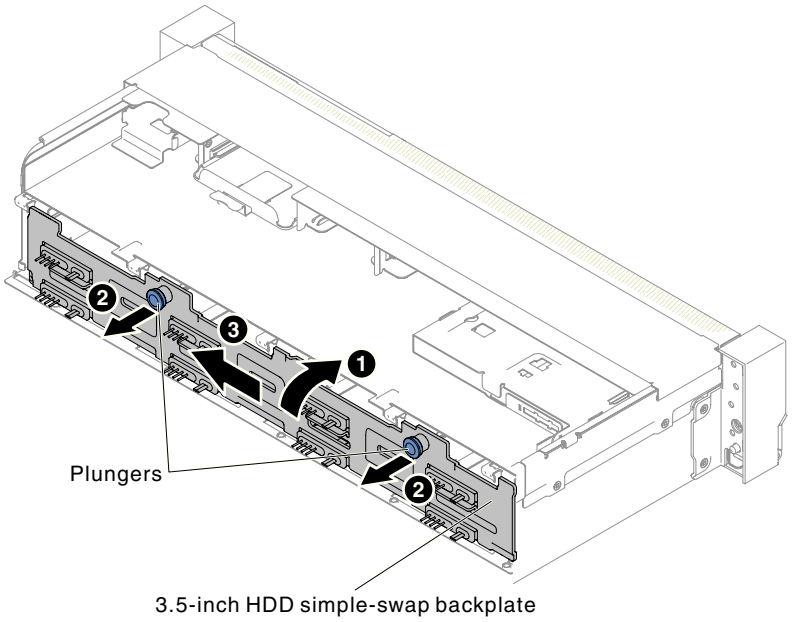


*Figure 247. 3.5-inch simple-swap backplate assembly/hot-swap hard disk drive backplane*

9. Connect the SAS signal and power/configuration cables to the system board.

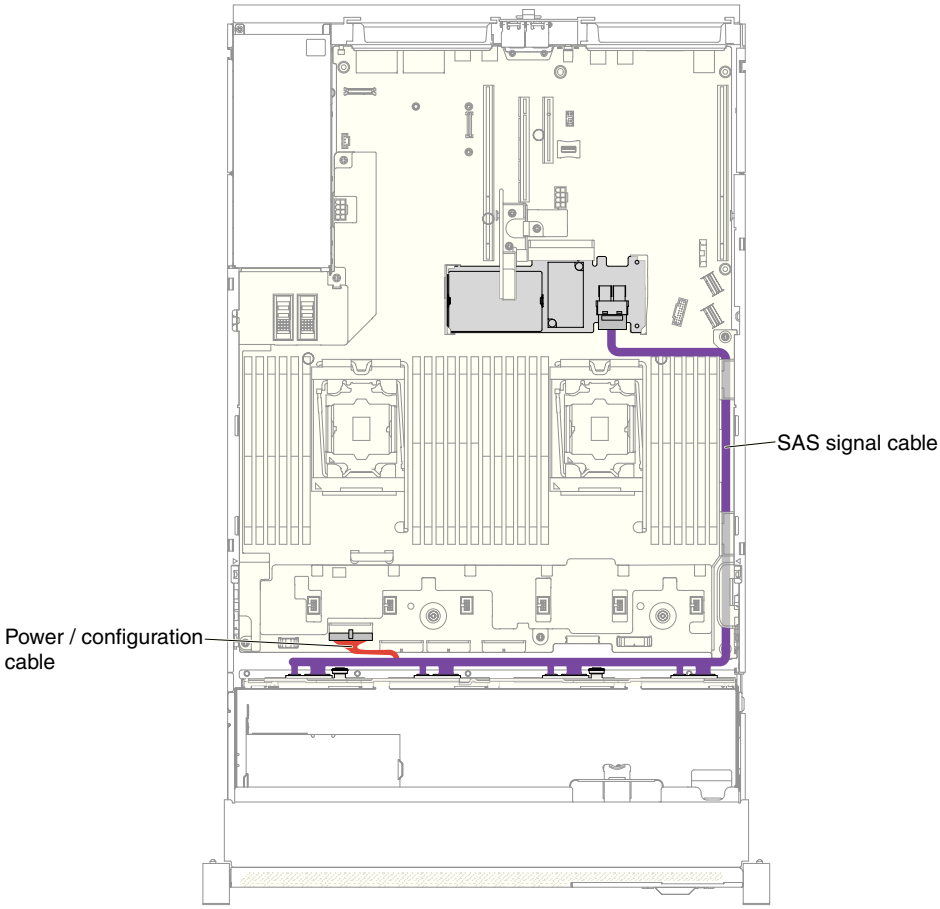


*Figure 248. 8x3.5-inch simple-swap hard disk drive with hardware RAID cabling*

10. Replace the fan cage and fans if you removed them (see “Replacing the fan cage assembly” on page 173 and “Replacing a hot-swap fan” on page 175).
11. Reinstall the hard disk drives (see “Replacing a hot-swap hard disk drive” on page 155).
12. Install the top cover (see “Replacing the top cover” on page 147).
13. Slide the server into the rack.
14. Reconnect the power cords and any cables that you removed.
15. Turn on the peripheral devices and the server.

## Installing a 8x 2.5-inch hot-swap HDD assembly kit

Use this information to install a 8x 2.5-inch hot-swap HDD assembly kit.

### About this task

You can install an IBM System x3650 M5 8x 2.5-inch hot-swap HDD assembly kit to add eight additional 2.5-inch hot-swap hard disk drives in the server. See http://www.ibm.com/systems/info/x86servers/serverproven/compat/us/ for a list of supported optional devices. To order a 8x 2.5-inch hot-swap HDD assembly kit, contact your IBM sales representative or IBM reseller.

The 8x 2.5-inch hot-swap HDD assembly kit contains the following components:

- Eight 2.5-inch HDD fillers
- One hot-swap backplane
- One power/configuration cable (150 mm)
- One power/configuration cable (230 mm)
- One mini SAS HD Y-cable (right angle, 905/950 mm)
- One mini SAS HD Y-cable (580/590 mm)

**Note:**

1. The 8x 2.5-inch hot-swap HDD assembly kit including structural parts and Tier 1 parts.
2. You will not use all cables that come with the option kit, some cables may be redundant depending on your configuration.

To install a 8x 2.5-inch hot-swap HDD assembly kit, complete the following steps:

### Procedure

1. Read the safety information that begins on “Safety” on page vii and “Installation guidelines” on page 283.
2. Turn off the server and peripheral devices and disconnect the power cords and all external cables, if necessary.
3. Remove the top cover (see “Removing the top cover” on page 146).
4. Remove the two 4-drive filler panels.

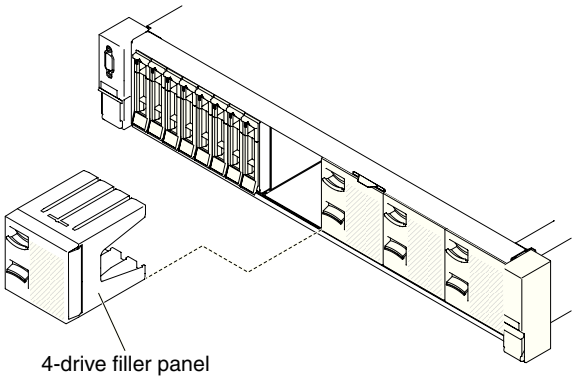


*Figure 249. Filler panels*

5. To obtain more working room, remove the fan cage (see "Removing the fan cage assembly" on page 172).
6. Pull the hard disk drives or fillers out of the server slightly to disengage them from the backplanes. For more information, (see "Removing a hot-swap hard disk drive" on page 154).
7. Install the new backplane in slot 2 or slot 3 depending on your configuration. Insert the backplane tabs into slots on the bottom of the cage and push the backplane forward into the release latch (on top of the backplane cage) until the backplane is locked in place.

   **Note:** You can connect the cables to the drive backplane before installing the backplane onto the cage or you can connect the cables after you install the backplane, if that is easier for you.

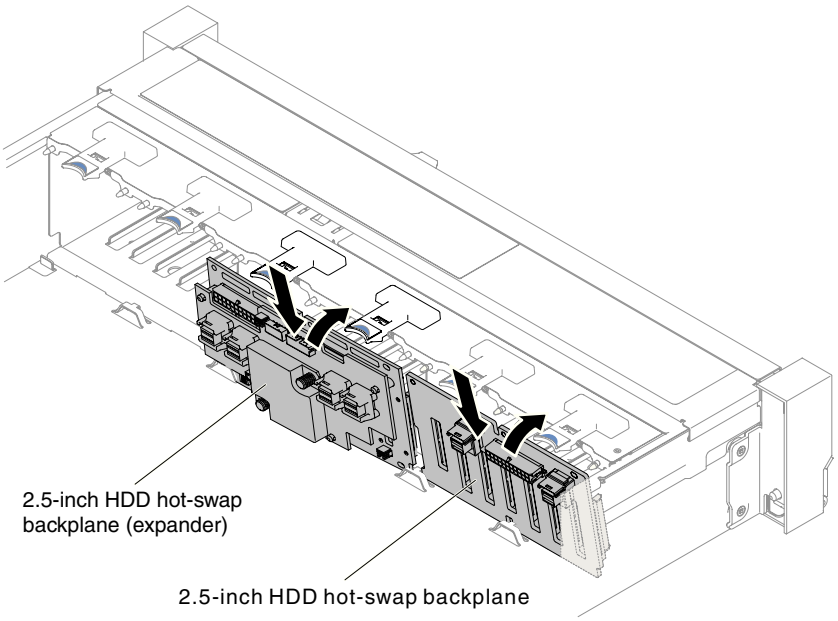


*Figure 250. Backplane installation*

8. Connect SAS signal and power/configuration cables to the backplane and the system board as the following illustrations.
   - If the new backplane is installed in slot 2, route cables as the following illustration.

**Note:** Use right angle mini SAS HD Y-cable to connect to PCI expansion slots 4.

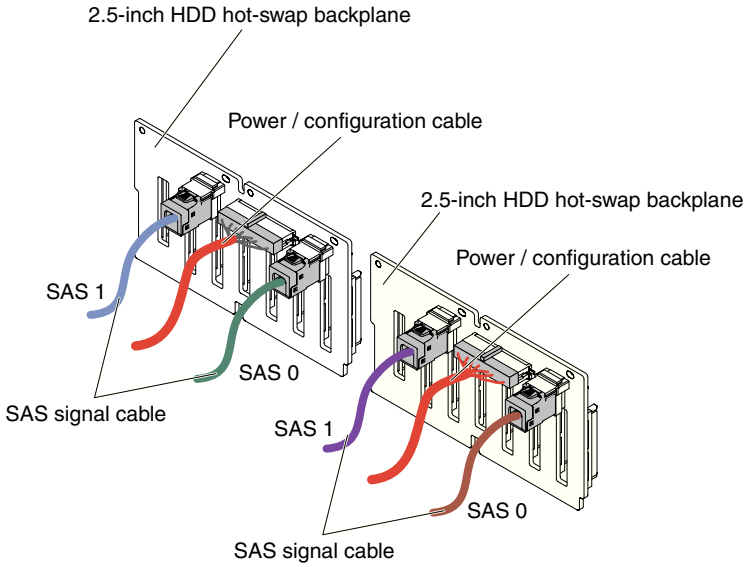


*Figure 251. Cable connections*

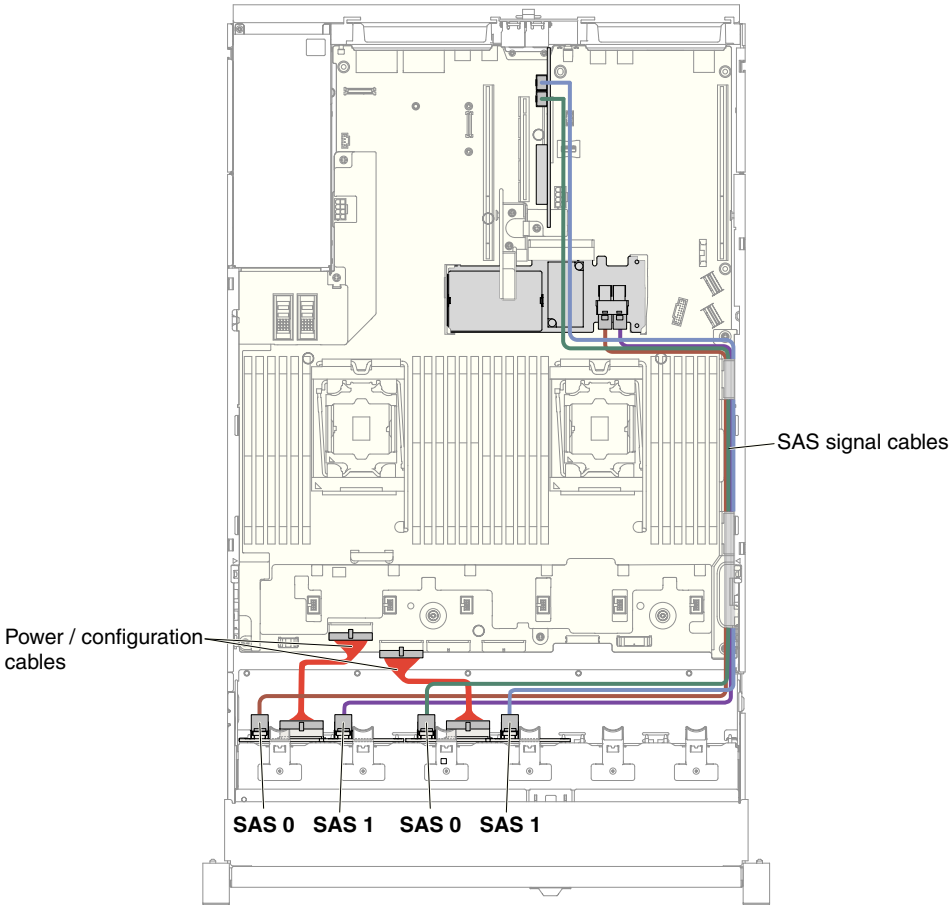


*Figure 252. Cable routing*

- If the new backplane is installed in slot 3, route cables as following illustrations.
  a. If the backplane is installed in slot 2, route cables as the following illustration.

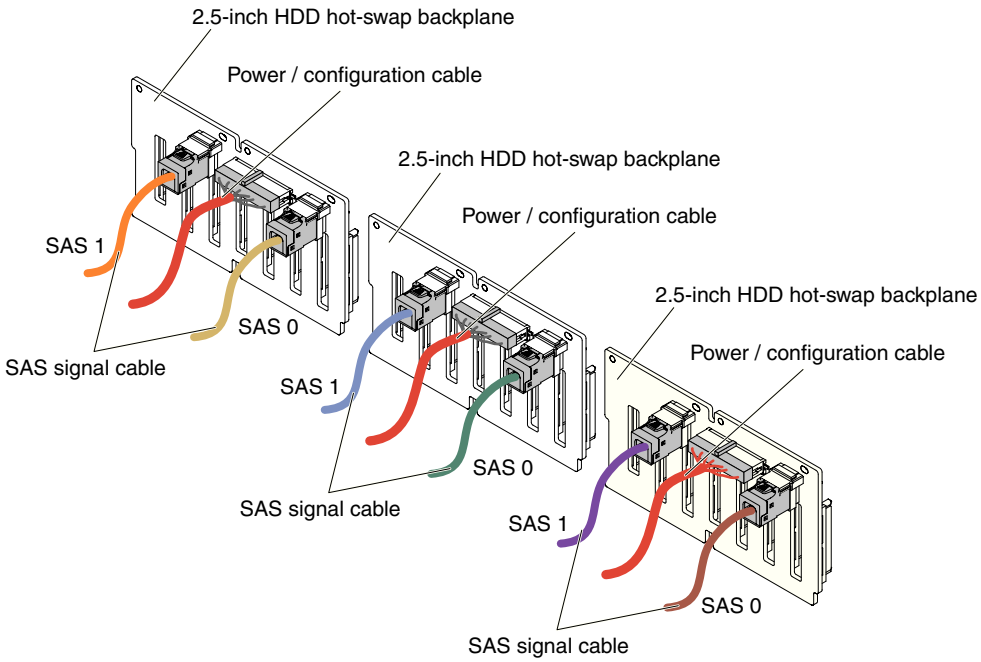


*Figure 253. Cable connections*

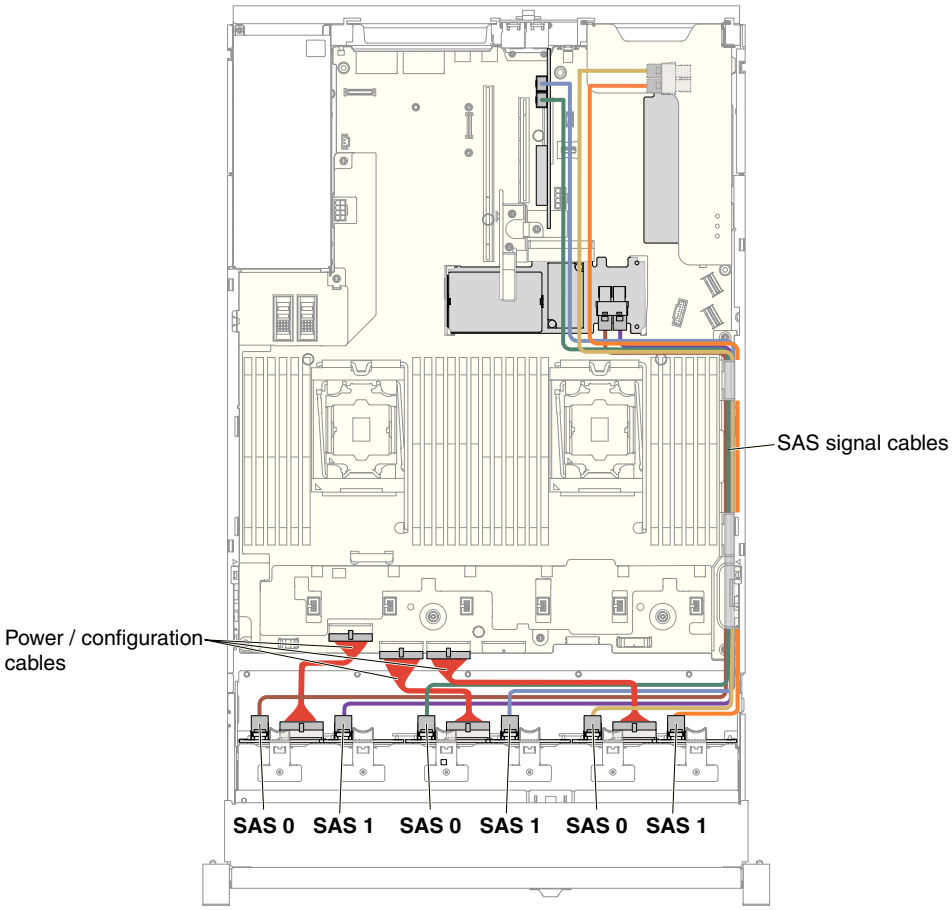


*Figure 254. Cable routing*

b. If the expander is installed in slot 2, route cables as the following illustration.

**Note:** Use right angle mini SAS HD Y-cable to connect to PCI expansion slots 4.

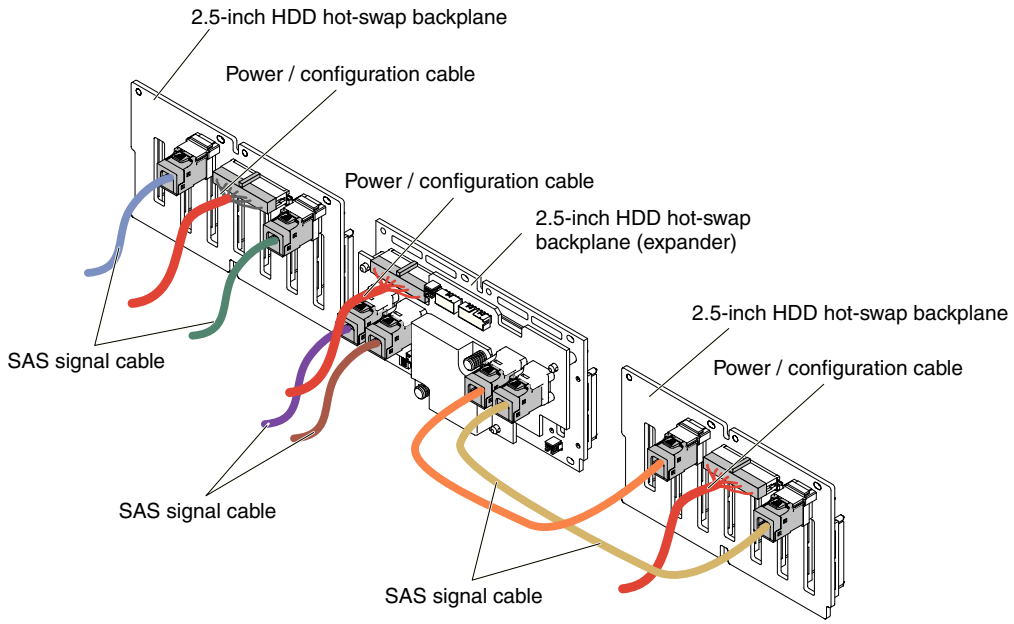


*Figure 255. Cable connection*

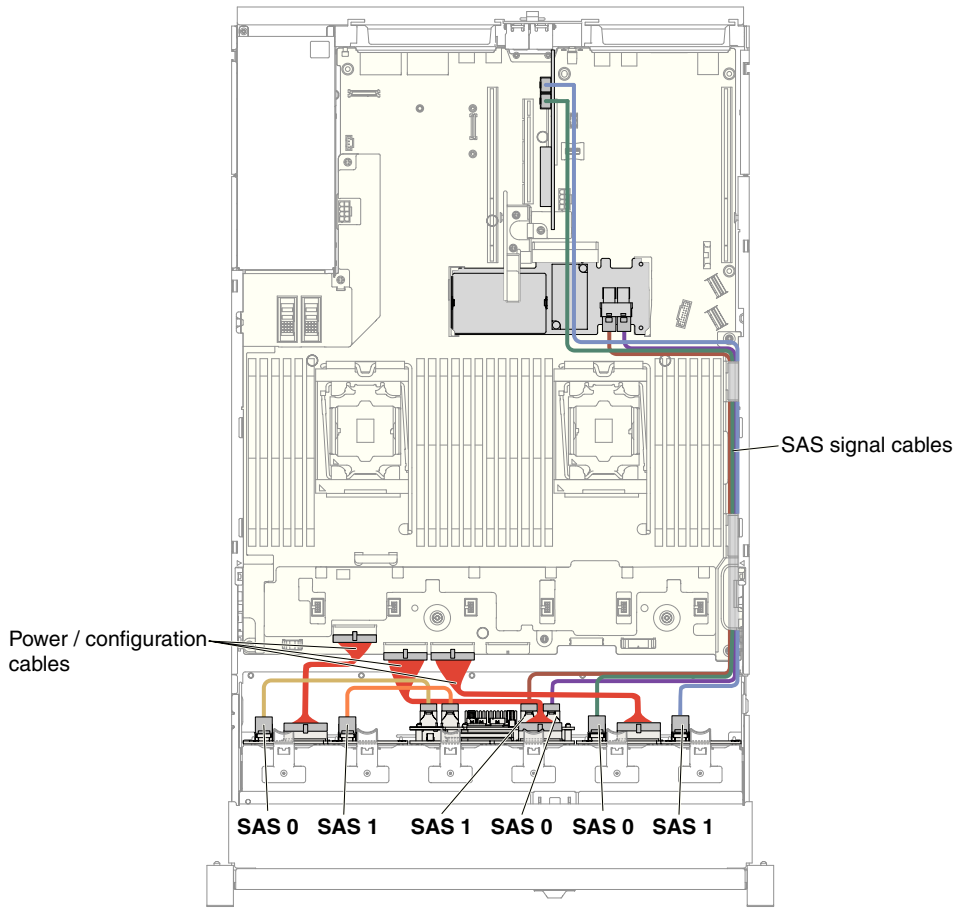


*Figure 256. Cable routing*

9. If you removed the fan cage, install it. (See “Replacing the fan cage assembly” on page 173).
10. Insert the hard disk drives and the fillers the rest of the way into the bays.

## Installing a 8x 2.5-inch hot-swap HDD assembly with expander kit

Use this information to install a 8x 2.5-inch hot-swap HDD assembly kit with expander.

### About this task

You can install an IBM System x3650 M5 8x 2.5-inch hot-swap HDD assembly with expander kit to add eight additional 2.5-inch hot-swap hard disk drives in the server. See http://www.ibm.com/systems/info/x86servers/serverproven/compat/us/ for a list of supported optional devices. To order a 8x 2.5-inch hot-swap HDD assembly kit with expander, contact your IBM sales representative or IBM reseller.

The 8x 2.5-inch hot-swap HDD assembly with expander kit contains the following components:

- Eight 2.5-inch HDD fillers
- One expander
- Two power/configuration cables (230 mm)
- One power/configuration cable (260 mm)
- One mini-SAS HD Y-cable (580/590 mm)
- One mini-SAS HD cable (350 mm)
- One mini-SAS HD cable (150 mm)
- Two mini-SAS HD cables (250 mm)

**Note:** The 8x 2.5-inch hot-swap HDD assembly with expander kit including structural parts and Tier 1 parts.

To install a 8x 2.5-inch hot-swap HDD assembly with expander kit, complete the following steps:

### Procedure

1. Read the safety information that begins on “Safety” on page vii and “Installation guidelines” on page 283.
2. Turn off the server and peripheral devices and disconnect the power cords and all external cables, if necessary.
3. Remove the top cover (see “Removing the top cover” on page 146).
4. Remove the two 4-drive filler panels.

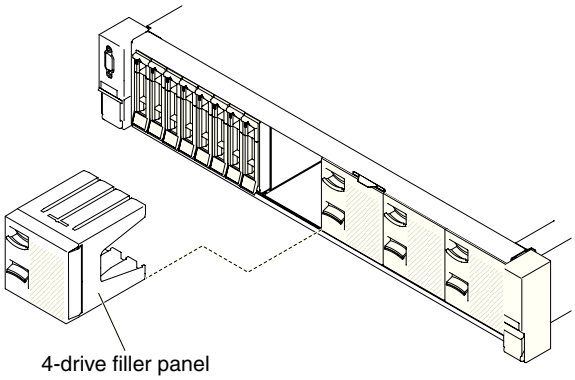


*Figure 257. Filler panels*

5. To obtain more working room, remove the fan cage (see "Removing the fan cage assembly" on page 172).
6. Pull the hard disk drives or fillers out of the server slightly to disengage them from the backplanes. For more information, (see "Removing a hot-swap hard disk drive" on page 154).
7. Disconnect all cables from the system board and backplanes.
8. Install the new backplane in slot 2 or slot 3 depending on your configuration. Insert the backplane tabs into slots on the bottom of the cage and push the backplane forward into the release latch (on top of the backplane cage) until the backplane is locked in place.

   **Note:** You can connect the cables to the drive backplane before installing the backplane onto the cage or you can connect the cables after you install the backplane, if that is easier for you.

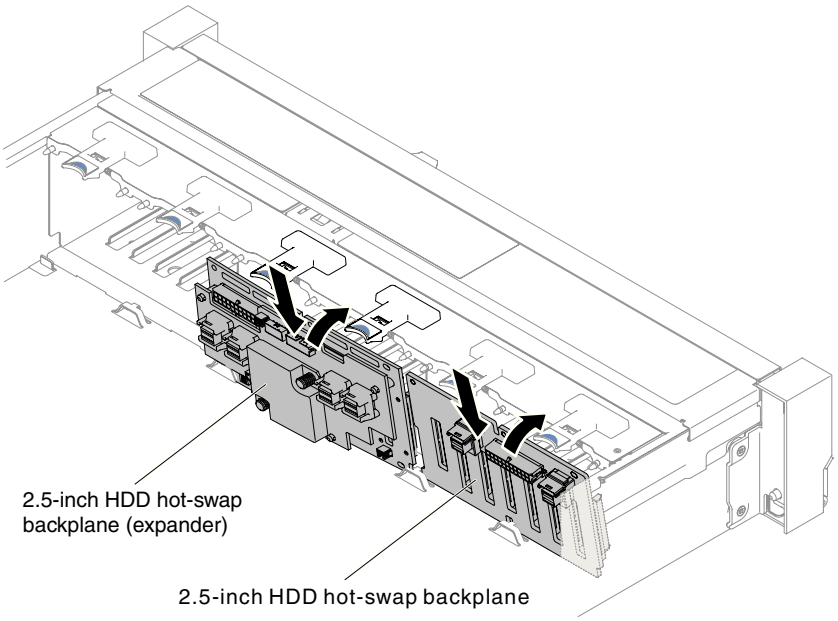


*Figure 258. Expander installation*

9. Connect mini-SAS HD cables, power/configuration and Mini-SAS HD Y-cable which come with the option kit to the backplanes and the system board.

- If you are installing the new expander in slot 2, connect and route cables as the following illustrations.

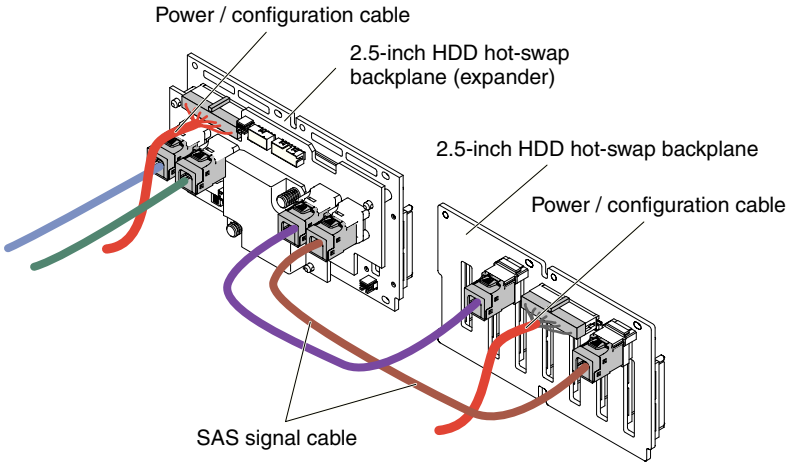


*Figure 259. Cable connections*

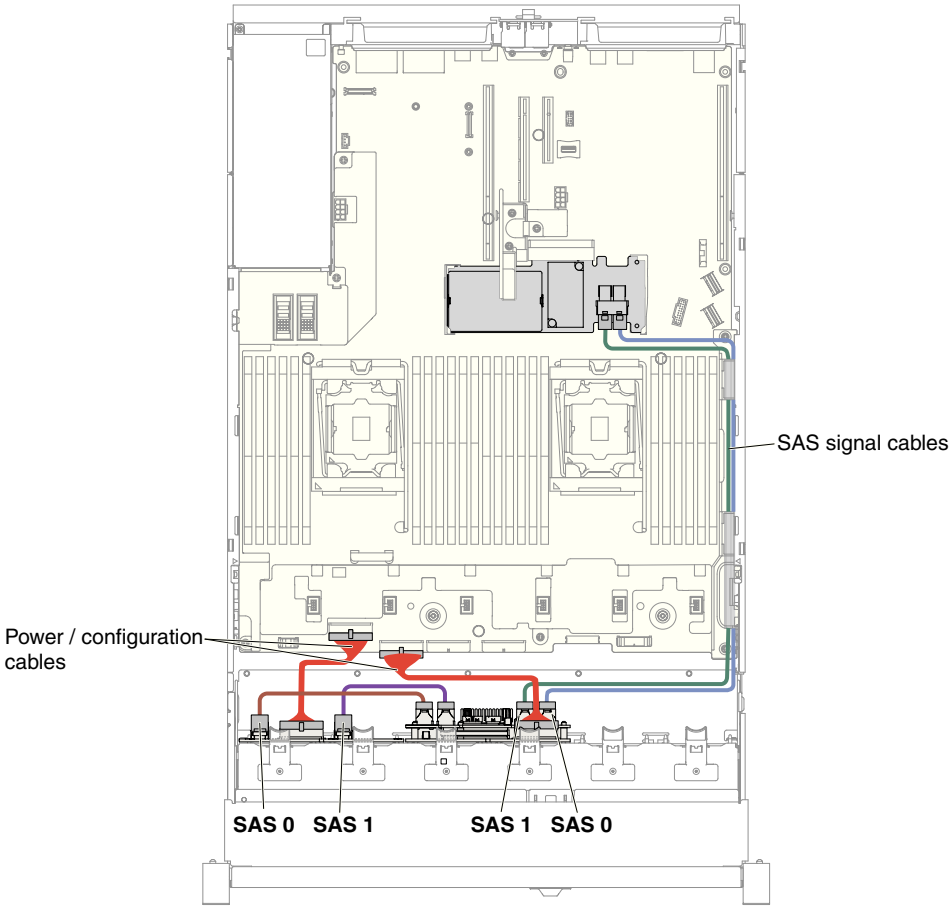


*Figure 260. Cable routing*

- If you are installing the new expander in slot 3, connect and route cables as the following illustrations.

a. If the backplane is installed in slot 2, connect and route cables as the following illustrations.

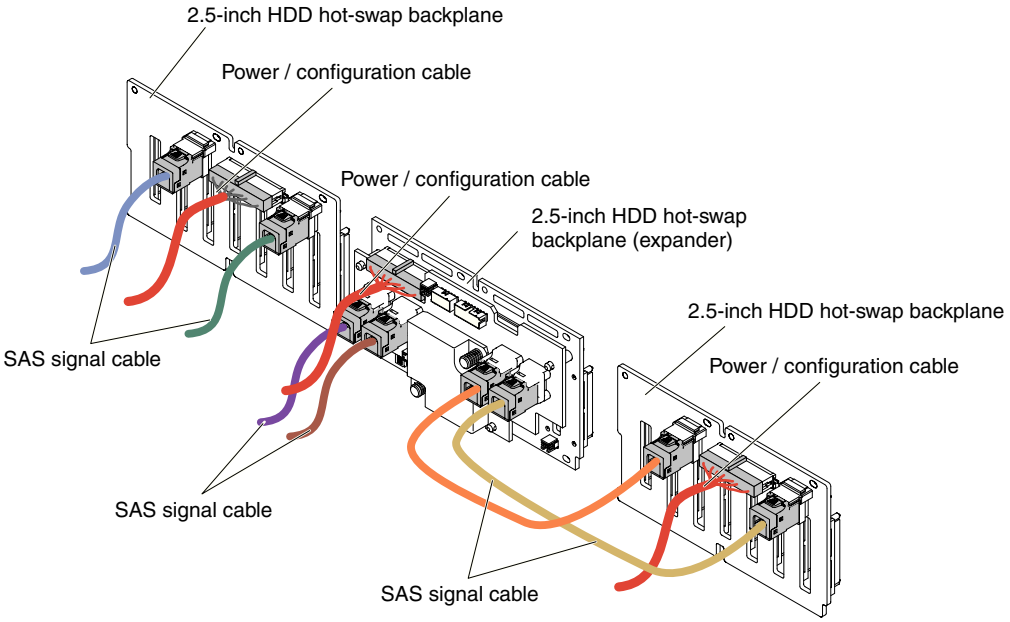


*Figure 261. Cable connections*

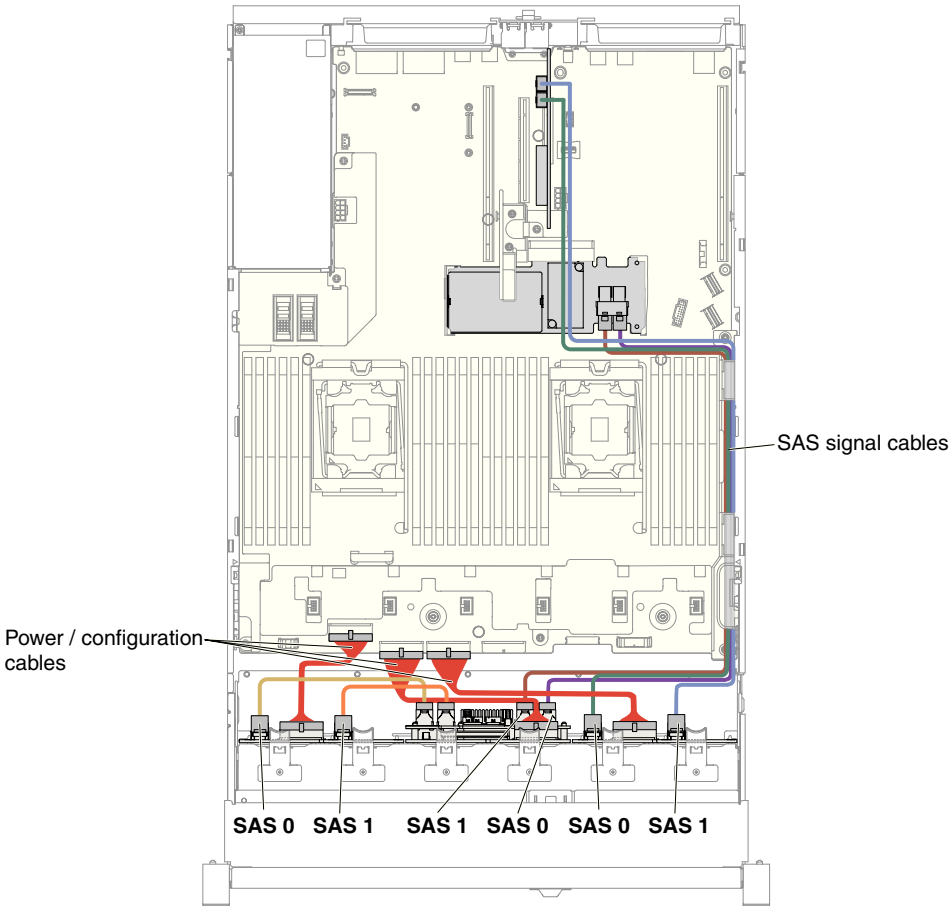


*Figure 262. Cable routing*

b. If the expander is installed in slot 2, connect and route cables as the following illustrations.

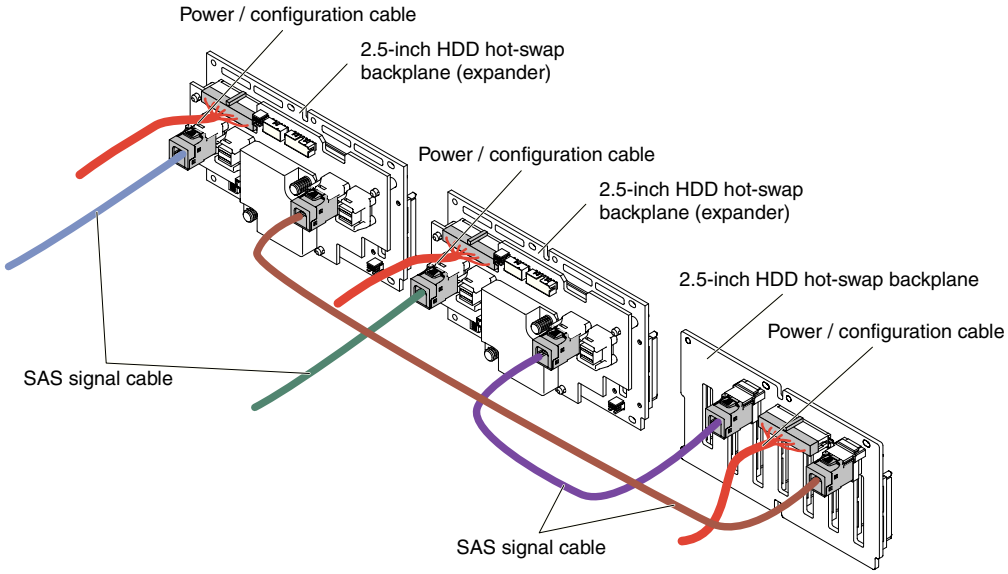


*Figure 263. Cable connections*

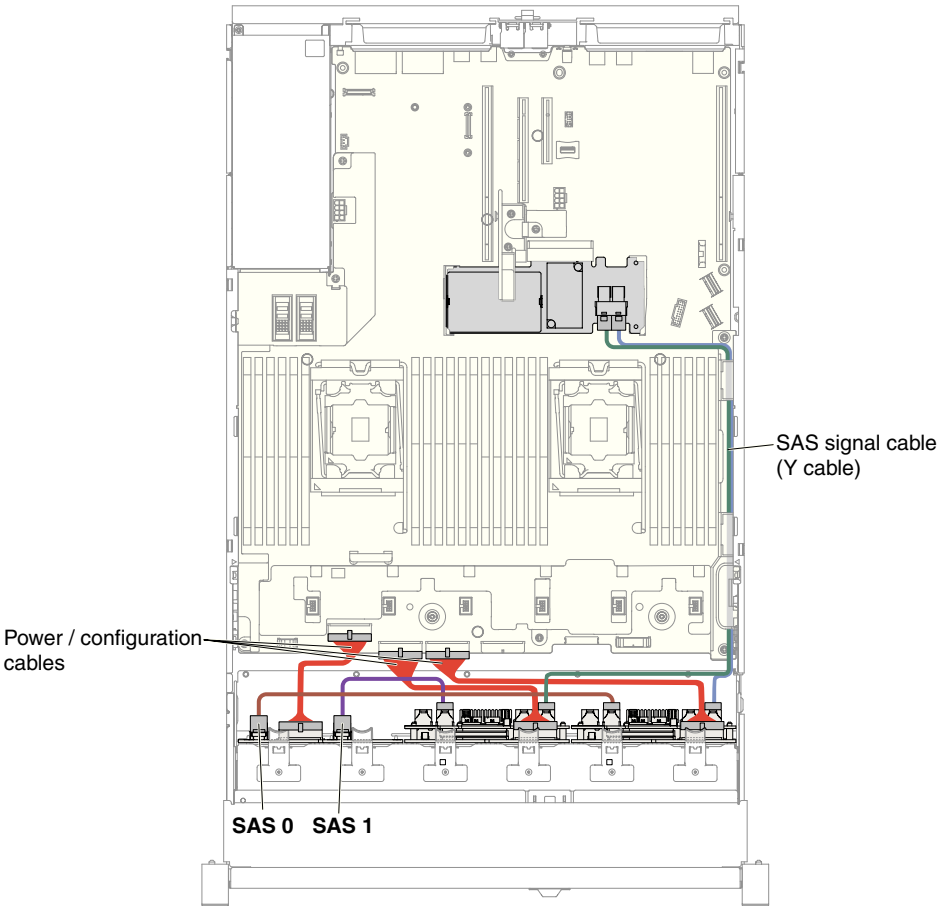


*Figure 264. Cable connections*

10. If you removed the fan cage assembly, install it. (See "Replacing the fan cage assembly" on page 173).
11. Insert the hard disk drives and the fillers the rest of the way into the bays.

## Updating the server configuration

Use this information to update the server configuration.

When you start the server for the first time after you add or remove a device, you might receive a message that the configuration has changed. The Setup utility starts automatically so that you can save the new configuration settings.

Some optional devices have device drivers that you must install. For information about installing device drivers, see the documentation that comes with each device.

If the server has an optional RAID adapter and you have installed or removed a hard disk drive, see the documentation that comes with the RAID adapter for information about reconfiguring the disk arrays.

If you have installed a USB hypervisor memory key on the SAS riser-card, see the user's guide that comes with the hypervisor memory key. Hypervisor enables guest operating systems to function on the server.

For information about configuring the integrated Gigabit Ethernet controller, see "Configuring the Ethernet controller" on page 61.

## Instructions for IBM Business Partners

Instructions for IBM Business Partners on verifying the newly installed devices by running the Dynamic System Analysis (DSA) stress test.

In addition to the instructions in this chapter for installing optional hardware devices, updating firmware and device drivers, and completing the installation, IBM Business Partners must also complete the following steps:

1. After you have confirmed that the server starts correctly and recognizes the newly installed devices and that no error LEDs are lit, run the Dynamic System Analysis (DSA) stress test. For information about using DSA, see "IBM Dynamic System Analysis" on page 84.
2. Shut down and restart the server multiple times to ensure that the server is correctly configured and functions correctly with the newly installed devices.
3. Save the DSA log as a file and send it to IBM. For information about transferring data and logs, see "How to send DSA data to IBM."
4. To ship the server, repackage it in the original undamaged packing material and observe IBM procedures for shipping.

Support information for IBM Business Partners is available at http://www.ibm.com/partnerworld/.

## How to send DSA data to IBM

Use the IBM Enhanced Customer Data Repository to send diagnostic data to IBM.

Before you send diagnostic data to IBM, read the terms of use at http://www.ibm.com/de/support/ecurep/terms.html.

You can use any of the following methods to send diagnostic data to IBM:

- **Standard upload:** http://www.ibm.com/de/support/ecurep/send_http.html
- **Standard upload with the system serial number:** http://www.ecurep.ibm.com/app/upload_hw
- **Secure upload:** http://www.ibm.com/de/support/ecurep/send_http.html#secure
- **Secure upload with the system serial number:** https://www.ecurep.ibm.com/app/upload_hw

# Appendix A. Integrated management module II (IMM2) error messages

When a hardware event is detected by the IMM on the server, the IMM logs that event in the system-event log in the server.

For each event code, the following fields are displayed:

**Event identifier**
A hexadecimal identifier that uniquely identifies an event or class of events. In this documentation, the event identifiers are prefixed with 0x and followed by eight characters.

**Event description**
The logged message string that appears for an event. When the event string is displayed in the system-event log, information such as a specific component is displayed. In this documentation, that additional information appears as variables, such as [arg1] or [arg2].

**Explanation**
Additional information to explain why the event occurred.

**Severity**
An indication of the level of concern for the condition. In the system-event log, severity is abbreviated to the first character. The following severities can be displayed.

**Info:** The event was recorded for audit purposes, usually a user action or a change of states that is normal behavior.

**Warning:**
The event is not as severe as an error, but if possible, the condition should be corrected before it becomes an error. It might also be a condition that requires additional monitoring or maintenance.

**Error:** The event is a failure or critical condition that impairs service or an expected function.

**Alert Category**
Similar events are grouped together in categories. The alert category is in the following format:

*severity - device*

*severity* is one of the following severity levels:

- **Critical:** A key component in the server is no longer functioning.
- **Warning:** The event might progress to a critical level.
- **System:** The event is the result of a system error or a configuration change.

*device* is the specific device in the server that caused the event to be generated.

**Serviceable**
Whether user action is required to correct the problem.

© Copyright IBM Corp. 2014

**CIM Information**
The prefix of the message ID and the sequence number that is used by the CIM message registry.

**SNMP Trap ID**
The SNMP trap ID that is found in the SNMP alert management information base (MIB).

**Automatically contact Service**
If this field is set to **Yes**, and you have enabled Electronic Service Agent™ (ESA), IBM Support will be notified automatically if the event is generated.

While you wait for IBM Support to call, you can perform the recommended actions for the event.

**User response**
The actions that you should perform to solve the event.

Perform the steps listed in this section in the order shown until the problem is solved. After you perform all of the actions that are described in this field, if you cannot solve the problem, contact IBM Support.

**Note:** This list includes error codes and messages that might not apply to this machine type and model.

Below is the list of IMM2 error messages and suggested actions to correct the detected server problems. For more information about IMM2, see the *Integrated Management Module II User's Guide* at http://www.ibm.com/support/entry/portal/docdisplay?lndocid=MIGR-5089484..

## IMM Events that automatically notify Support

You can configure the Integrated Management Module II (IMM2) to automatically notify Support (also known as *call home*) if certain types of errors are encountered. If you have configured this function, see the table for a list of events that automatically notify Support.

*Table 16. Events that automatically notify Support*

| Event ID | Message String | Automatically Notify Support |
|---|---|---|
| 40000086-00000000 | Test Call Home Generated by user [arg1]. | Yes |
| 40000087-00000000 | Manual Call Home by user [arg1]: [arg2]. | Yes |
| 80010202-0701ffff | Numeric sensor [NumericSensorElementName] going low (lower critical) has asserted. (CMOS Battery) | Yes |
| 80010902-0701ffff | Numeric sensor [NumericSensorElementName] going high (upper critical) has asserted. (SysBrd 12V) | Yes |
| 806f0021-2201ffff | Fault in slot [PhysicalConnectorSystemElementName] on system [ComputerSystemElementName]. (No Op ROM Space) | Yes |

*Table 16. Events that automatically notify Support (continued)*

| Event ID | Message String | Automatically Notify Support |
|---|---|---|
| 806f0021-2582ffff | Fault in slot [PhysicalConnectorSystemElementName] on system [ComputerSystemElementName]. (All PCI Error) | Yes |
| 806f0021-2c01ffff | Fault in slot [PhysicalConnectorSystemElementName] on system [ComputerSystemElementName]. (ML2 Card Fault) | Yes |
| 806f0021-3001ffff | Fault in slot [PhysicalConnectorSystemElementName] on system [ComputerSystemElementName]. (Internal RAID) | Yes |
| 806f0108-0a01ffff | [PowerSupplyElementName] has Failed. (Power Supply 1) | Yes |
| 806f0108-0a02ffff | [PowerSupplyElementName] has Failed. (Power Supply 2) | Yes |
| 806f010c-2001ffff | Uncorrectable error detected for [PhysicalMemoryElementName] on Subsystem [MemoryElementName]. (DIMM 1) | Yes |
| 806f010c-2002ffff | Uncorrectable error detected for [PhysicalMemoryElementName] on Subsystem [MemoryElementName]. (DIMM 2) | Yes |
| 806f010c-2003ffff | Uncorrectable error detected for [PhysicalMemoryElementName] on Subsystem [MemoryElementName]. (DIMM 3) | Yes |
| 806f010c-2004ffff | Uncorrectable error detected for [PhysicalMemoryElementName] on Subsystem [MemoryElementName]. (DIMM 4) | Yes |
| 806f010c-2005ffff | Uncorrectable error detected for [PhysicalMemoryElementName] on Subsystem [MemoryElementName]. (DIMM 5) | Yes |
| 806f010c-2006ffff | Uncorrectable error detected for [PhysicalMemoryElementName] on Subsystem [MemoryElementName]. (DIMM 6) | Yes |
| 806f010c-2007ffff | Uncorrectable error detected for [PhysicalMemoryElementName] on Subsystem [MemoryElementName]. (DIMM 7) | Yes |
| 806f010c-2008ffff | Uncorrectable error detected for [PhysicalMemoryElementName] on Subsystem [MemoryElementName]. (DIMM 8) | Yes |

*Table 16. Events that automatically notify Support (continued)*

| Event ID | Message String | Automatically Notify Support |
|---|---|---|
| 806f010c-2009ffff | Uncorrectable error detected for [PhysicalMemoryElementName] on Subsystem [MemoryElementName]. (DIMM 9) | Yes |
| 806f010c-200affff | Uncorrectable error detected for [PhysicalMemoryElementName] on Subsystem [MemoryElementName]. (DIMM 10) | Yes |
| 806f010c-200bffff | Uncorrectable error detected for [PhysicalMemoryElementName] on Subsystem [MemoryElementName]. (DIMM 11) | Yes |
| 806f010c-200cffff | Uncorrectable error detected for [PhysicalMemoryElementName] on Subsystem [MemoryElementName]. (DIMM 12) | Yes |
| 806f010c-200dffff | Uncorrectable error detected for [PhysicalMemoryElementName] on Subsystem [MemoryElementName]. (DIMM 13) | Yes |
| 806f010c-200effff | Uncorrectable error detected for [PhysicalMemoryElementName] on Subsystem [MemoryElementName]. (DIMM 14) | Yes |
| 806f010c-200fffff | Uncorrectable error detected for [PhysicalMemoryElementName] on Subsystem [MemoryElementName]. (DIMM 15) | Yes |
| 806f010c-2010ffff | Uncorrectable error detected for [PhysicalMemoryElementName] on Subsystem [MemoryElementName]. (DIMM 16) | Yes |
| 806f010c-2011ffff | Uncorrectable error detected for [PhysicalMemoryElementName] on Subsystem [MemoryElementName]. (DIMM 17) | Yes |
| 806f010c-2012ffff | Uncorrectable error detected for [PhysicalMemoryElementName] on Subsystem [MemoryElementName]. (DIMM 18) | Yes |
| 806f010c-2013ffff | Uncorrectable error detected for [PhysicalMemoryElementName] on Subsystem [MemoryElementName]. (DIMM 19) | Yes |
| 806f010c-2014ffff | Uncorrectable error detected for [PhysicalMemoryElementName] on Subsystem [MemoryElementName]. (DIMM 20) | Yes |

*Table 16. Events that automatically notify Support (continued)*

| Event ID | Message String | Automatically Notify Support |
|---|---|---|
| 806f010c-2015ffff | Uncorrectable error detected for [PhysicalMemoryElementName] on Subsystem [MemoryElementName]. (DIMM 21) | Yes |
| 806f010c-2016ffff | Uncorrectable error detected for [PhysicalMemoryElementName] on Subsystem [MemoryElementName]. (DIMM 22) | Yes |
| 806f010c-2017ffff | Uncorrectable error detected for [PhysicalMemoryElementName] on Subsystem [MemoryElementName]. (DIMM 23) | Yes |
| 806f010c-2018ffff | Uncorrectable error detected for [PhysicalMemoryElementName] on Subsystem [MemoryElementName]. (DIMM 24) | Yes |
| 806f010c-2581ffff | Uncorrectable error detected for [PhysicalMemoryElementName] on Subsystem [MemoryElementName]. (All DIMMS) | Yes |
| 806f010d-0400ffff | The Drive [StorageVolumeElementName] has been disabled due to a detected fault. (Drive 0) | Yes |
| 806f010d-0401ffff | The Drive [StorageVolumeElementName] has been disabled due to a detected fault. (Drive 1) | Yes |
| 806f010d-0402ffff | The Drive [StorageVolumeElementName] has been disabled due to a detected fault. (Drive 2) | Yes |
| 806f010d-0403ffff | The Drive [StorageVolumeElementName] has been disabled due to a detected fault. (Drive 3) | Yes |
| 806f010d-0404ffff | The Drive [StorageVolumeElementName] has been disabled due to a detected fault. (Drive 4) | Yes |
| 806f010d-0405ffff | The Drive [StorageVolumeElementName] has been disabled due to a detected fault. (Drive 5) | Yes |
| 806f010d-0406ffff | The Drive [StorageVolumeElementName] has been disabled due to a detected fault. (Drive 6) | Yes |
| 806f010d-0407ffff | The Drive [StorageVolumeElementName] has been disabled due to a detected fault. (Drive 7) | Yes |
| 806f010d-0408ffff | The Drive [StorageVolumeElementName] has been disabled due to a detected fault. (Drive 8) | Yes |

*Table 16. Events that automatically notify Support (continued)*

| Event ID | Message String | Automatically Notify Support |
|---|---|---|
| 806f010d-0409ffff | The Drive [StorageVolumeElementName] has been disabled due to a detected fault. (Drive 9) | Yes |
| 806f010d-040affff | The Drive [StorageVolumeElementName] has been disabled due to a detected fault. (Drive 10) | Yes |
| 806f010d-040bffff | The Drive [StorageVolumeElementName] has been disabled due to a detected fault. (Drive 11) | Yes |
| 806f010d-040cffff | The Drive [StorageVolumeElementName] has been disabled due to a detected fault. (Drive 12) | Yes |
| 806f010d-040dffff | The Drive [StorageVolumeElementName] has been disabled due to a detected fault. (Drive 13) | Yes |
| 806f010d-040effff | The Drive [StorageVolumeElementName] has been disabled due to a detected fault. (Drive 14) | Yes |
| 806f010d-040fffff | The Drive [StorageVolumeElementName] has been disabled due to a detected fault. (Drive 15) | Yes |
| 806f010d-0410ffff | The Drive [StorageVolumeElementName] has been disabled due to a detected fault. (Drive 16) | Yes |
| 806f010d-0411ffff | The Drive [StorageVolumeElementName] has been disabled due to a detected fault. (Drive 17) | Yes |
| 806f010d-0412ffff | The Drive [StorageVolumeElementName] has been disabled due to a detected fault. (Drive 18) | Yes |
| 806f010d-0413ffff | The Drive [StorageVolumeElementName] has been disabled due to a detected fault. (Drive 19) | Yes |
| 806f010d-0414ffff | The Drive [StorageVolumeElementName] has been disabled due to a detected fault. (Drive 20) | Yes |
| 806f010d-0415ffff | The Drive [StorageVolumeElementName] has been disabled due to a detected fault. (Drive 21) | Yes |
| 806f010d-0416ffff | The Drive [StorageVolumeElementName] has been disabled due to a detected fault. (Drive 22) | Yes |
| 806f010d-0417ffff | The Drive [StorageVolumeElementName] has been disabled due to a detected fault. (Drive 23) | Yes |
| 806f010d-0418ffff | The Drive [StorageVolumeElementName] has been disabled due to a detected fault. (Drive 24) | Yes |

*Table 16. Events that automatically notify Support (continued)*

| Event ID | Message String | Automatically Notify Support |
|---|---|---|
| 806f010d-0419ffff | The Drive [StorageVolumeElementName] has been disabled due to a detected fault. (Drive 25) | Yes |
| 806f010d-041affff | The Drive [StorageVolumeElementName] has been disabled due to a detected fault. (Drive 26) | Yes |
| 806f010d-041bffff | The Drive [StorageVolumeElementName] has been disabled due to a detected fault. (Drive 27) | Yes |
| 806f010d-041cffff | The Drive [StorageVolumeElementName] has been disabled due to a detected fault. (Drive 28) | Yes |
| 806f010d-041dffff | The Drive [StorageVolumeElementName] has been disabled due to a detected fault. (Drive 29) | Yes |
| 806f010d-041effff | The Drive [StorageVolumeElementName] has been disabled due to a detected fault. (Drive 30) | Yes |
| 806f010d-041fffff | The Drive [StorageVolumeElementName] has been disabled due to a detected fault. (Drive 31) | Yes |
| 806f011b-0701ffff | The connector [PhysicalConnectorElementName] has encountered a configuration error. (Front USB) | Yes |
| 806f011b-0c01ffff | The connector [PhysicalConnectorElementName] has encountered a configuration error. (FP LCD Cable) | Yes |
| 806f011b-2502ffff | The connector [PhysicalConnectorElementName] has encountered a configuration error. (nvDIMM 02 Cable) | Yes |
| 806f011b-2505ffff | The connector [PhysicalConnectorElementName] has encountered a configuration error. (nvDIMM 05 Cable) | Yes |
| 806f011b-2508ffff | The connector [PhysicalConnectorElementName] has encountered a configuration error. (nvDIMM 08 Cable) | Yes |
| 806f011b-250bffff | The connector [PhysicalConnectorElementName] has encountered a configuration error. (nvDIMM 11 Cable) | Yes |
| 806f0207-0301ffff | [ProcessorElementName] has Failed with FRB1/BIST condition. (CPU 1) | Yes |
| 806f0207-0302ffff | [ProcessorElementName] has Failed with FRB1/BIST condition. (CPU 2) | Yes |

*Table 16. Events that automatically notify Support (continued)*

| Event ID | Message String | Automatically Notify Support |
|---|---|---|
| 806f0207-2584ffff | [ProcessorElementName] has Failed with FRB1/BIST condition. (All CPUs) | Yes |
| 806f020d-0400ffff | Failure Predicted on drive [StorageVolumeElementName] for array [ComputerSystemElementName]. (Drive 0) | Yes |
| 806f020d-0401ffff | Failure Predicted on drive [StorageVolumeElementName] for array [ComputerSystemElementName]. (Drive 1) | Yes |
| 806f020d-0402ffff | Failure Predicted on drive [StorageVolumeElementName] for array [ComputerSystemElementName]. (Drive 2) | Yes |
| 806f020d-0403ffff | Failure Predicted on drive [StorageVolumeElementName] for array [ComputerSystemElementName]. (Drive 3) | Yes |
| 806f020d-0404ffff | Failure Predicted on drive [StorageVolumeElementName] for array [ComputerSystemElementName]. (Drive 4) | Yes |
| 806f020d-0405ffff | Failure Predicted on drive [StorageVolumeElementName] for array [ComputerSystemElementName]. (Drive 5) | Yes |
| 806f020d-0406ffff | Failure Predicted on drive [StorageVolumeElementName] for array [ComputerSystemElementName]. (Drive 6) | Yes |
| 806f020d-0407ffff | Failure Predicted on drive [StorageVolumeElementName] for array [ComputerSystemElementName]. (Drive 7) | Yes |
| 806f020d-0408ffff | Failure Predicted on drive [StorageVolumeElementName] for array [ComputerSystemElementName]. (Drive 8) | Yes |
| 806f020d-0409ffff | Failure Predicted on drive [StorageVolumeElementName] for array [ComputerSystemElementName]. (Drive 9) | Yes |
| 806f020d-040affff | Failure Predicted on drive [StorageVolumeElementName] for array [ComputerSystemElementName]. (Drive 10) | Yes |
| 806f020d-040bffff | Failure Predicted on drive [StorageVolumeElementName] for array [ComputerSystemElementName]. (Drive 11) | Yes |
| 806f020d-040cffff | Failure Predicted on drive [StorageVolumeElementName] for array [ComputerSystemElementName]. (Drive 12) | Yes |
| 806f020d-040dffff | Failure Predicted on drive [StorageVolumeElementName] for array [ComputerSystemElementName]. (Drive 13) | Yes |
| 806f020d-040effff | Failure Predicted on drive [StorageVolumeElementName] for array [ComputerSystemElementName]. (Drive 14) | Yes |

*Table 16. Events that automatically notify Support (continued)*

| Event ID | Message String | Automatically Notify Support |
|---|---|---|
| 806f020d-040fffff | Failure Predicted on drive [StorageVolumeElementName] for array [ComputerSystemElementName]. (Drive 15) | Yes |
| 806f020d-0410ffff | Failure Predicted on drive [StorageVolumeElementName] for array [ComputerSystemElementName]. (Drive 16) | Yes |
| 806f020d-0411ffff | Failure Predicted on drive [StorageVolumeElementName] for array [ComputerSystemElementName]. (Drive 17) | Yes |
| 806f020d-0412ffff | Failure Predicted on drive [StorageVolumeElementName] for array [ComputerSystemElementName]. (Drive 18) | Yes |
| 806f020d-0413ffff | Failure Predicted on drive [StorageVolumeElementName] for array [ComputerSystemElementName]. (Drive 19) | Yes |
| 806f020d-0414ffff | Failure Predicted on drive [StorageVolumeElementName] for array [ComputerSystemElementName]. (Drive 20) | Yes |
| 806f020d-0415ffff | Failure Predicted on drive [StorageVolumeElementName] for array [ComputerSystemElementName]. (Drive 21) | Yes |
| 806f020d-0416ffff | Failure Predicted on drive [StorageVolumeElementName] for array [ComputerSystemElementName]. (Drive 22) | Yes |
| 806f020d-0417ffff | Failure Predicted on drive [StorageVolumeElementName] for array [ComputerSystemElementName]. (Drive 23) | Yes |
| 806f020d-0418ffff | Failure Predicted on drive [StorageVolumeElementName] for array [ComputerSystemElementName]. (Drive 24) | Yes |
| 806f020d-0419ffff | Failure Predicted on drive [StorageVolumeElementName] for array [ComputerSystemElementName]. (Drive 25) | Yes |
| 806f020d-041affff | Failure Predicted on drive [StorageVolumeElementName] for array [ComputerSystemElementName]. (Drive 26) | Yes |
| 806f020d-041bffff | Failure Predicted on drive [StorageVolumeElementName] for array [ComputerSystemElementName]. (Drive 27) | Yes |
| 806f020d-041cffff | Failure Predicted on drive [StorageVolumeElementName] for array [ComputerSystemElementName]. (Drive 28) | Yes |
| 806f020d-041dffff | Failure Predicted on drive [StorageVolumeElementName] for array [ComputerSystemElementName]. (Drive 29) | Yes |
| 806f020d-041effff | Failure Predicted on drive [StorageVolumeElementName] for array [ComputerSystemElementName]. (Drive 30) | Yes |

*Table 16. Events that automatically notify Support (continued)*

| Event ID | Message String | Automatically Notify Support |
|---|---|---|
| 806f020d-041fffff | Failure Predicted on drive [StorageVolumeElementName] for array [ComputerSystemElementName]. (Drive 31) | Yes |
| 806f050c-2001ffff | Memory Logging Limit Reached for [PhysicalMemoryElementName] on Subsystem [MemoryElementName]. (DIMM 1) | Yes |
| 806f050c-2002ffff | Memory Logging Limit Reached for [PhysicalMemoryElementName] on Subsystem [MemoryElementName]. (DIMM 2) | Yes |
| 806f050c-2003ffff | Memory Logging Limit Reached for [PhysicalMemoryElementName] on Subsystem [MemoryElementName]. (DIMM 3) | Yes |
| 806f050c-2004ffff | Memory Logging Limit Reached for [PhysicalMemoryElementName] on Subsystem [MemoryElementName]. (DIMM 4) | Yes |
| 806f050c-2005ffff | Memory Logging Limit Reached for [PhysicalMemoryElementName] on Subsystem [MemoryElementName]. (DIMM 5) | Yes |
| 806f050c-2006ffff | Memory Logging Limit Reached for [PhysicalMemoryElementName] on Subsystem [MemoryElementName]. (DIMM 6) | Yes |
| 806f050c-2007ffff | Memory Logging Limit Reached for [PhysicalMemoryElementName] on Subsystem [MemoryElementName]. (DIMM 7) | Yes |
| 806f050c-2008ffff | Memory Logging Limit Reached for [PhysicalMemoryElementName] on Subsystem [MemoryElementName]. (DIMM 8) | Yes |
| 806f050c-2009ffff | Memory Logging Limit Reached for [PhysicalMemoryElementName] on Subsystem [MemoryElementName]. (DIMM 9) | Yes |
| 806f050c-200affff | Memory Logging Limit Reached for [PhysicalMemoryElementName] on Subsystem [MemoryElementName]. (DIMM 10) | Yes |
| 806f050c-200bffff | Memory Logging Limit Reached for [PhysicalMemoryElementName] on Subsystem [MemoryElementName]. (DIMM 11) | Yes |

*Table 16. Events that automatically notify Support (continued)*

| Event ID | Message String | Automatically Notify Support |
|---|---|---|
| 806f050c-200cffff | Memory Logging Limit Reached for [PhysicalMemoryElementName] on Subsystem [MemoryElementName]. (DIMM 12) | Yes |
| 806f050c-200dffff | Memory Logging Limit Reached for [PhysicalMemoryElementName] on Subsystem [MemoryElementName]. (DIMM 13) | Yes |
| 806f050c-200effff | Memory Logging Limit Reached for [PhysicalMemoryElementName] on Subsystem [MemoryElementName]. (DIMM 14) | Yes |
| 806f050c-200fffff | Memory Logging Limit Reached for [PhysicalMemoryElementName] on Subsystem [MemoryElementName]. (DIMM 15) | Yes |
| 806f050c-2010ffff | Memory Logging Limit Reached for [PhysicalMemoryElementName] on Subsystem [MemoryElementName]. (DIMM 16) | Yes |
| 806f050c-2011ffff | Memory Logging Limit Reached for [PhysicalMemoryElementName] on Subsystem [MemoryElementName]. (DIMM 17) | Yes |
| 806f050c-2012ffff | Memory Logging Limit Reached for [PhysicalMemoryElementName] on Subsystem [MemoryElementName]. (DIMM 18) | Yes |
| 806f050c-2013ffff | Memory Logging Limit Reached for [PhysicalMemoryElementName] on Subsystem [MemoryElementName]. (DIMM 19) | Yes |
| 806f050c-2014ffff | Memory Logging Limit Reached for [PhysicalMemoryElementName] on Subsystem [MemoryElementName]. (DIMM 20) | Yes |
| 806f050c-2015ffff | Memory Logging Limit Reached for [PhysicalMemoryElementName] on Subsystem [MemoryElementName]. (DIMM 21) | Yes |
| 806f050c-2016ffff | Memory Logging Limit Reached for [PhysicalMemoryElementName] on Subsystem [MemoryElementName]. (DIMM 22) | Yes |
| 806f050c-2017ffff | Memory Logging Limit Reached for [PhysicalMemoryElementName] on Subsystem [MemoryElementName]. (DIMM 23) | Yes |

*Table 16. Events that automatically notify Support (continued)*

| Event ID | Message String | Automatically Notify Support |
|---|---|---|
| 806f050c-2018ffff | Memory Logging Limit Reached for [PhysicalMemoryElementName] on Subsystem [MemoryElementName]. (DIMM 24) | Yes |
| 806f050c-2581ffff | Memory Logging Limit Reached for [PhysicalMemoryElementName] on Subsystem [MemoryElementName]. (All DIMMS) | Yes |
| 806f060d-0400ffff | Array [ComputerSystemElementName] has failed. (Drive 0) | Yes |
| 806f060d-0401ffff | Array [ComputerSystemElementName] has failed. (Drive 1) | Yes |
| 806f060d-0402ffff | Array [ComputerSystemElementName] has failed. (Drive 2) | Yes |
| 806f060d-0403ffff | Array [ComputerSystemElementName] has failed. (Drive 3) | Yes |
| 806f060d-0404ffff | Array [ComputerSystemElementName] has failed. (Drive 4) | Yes |
| 806f060d-0405ffff | Array [ComputerSystemElementName] has failed. (Drive 5) | Yes |
| 806f060d-0406ffff | Array [ComputerSystemElementName] has failed. (Drive 6) | Yes |
| 806f060d-0407ffff | Array [ComputerSystemElementName] has failed. (Drive 7) | Yes |
| 806f060d-0408ffff | Array [ComputerSystemElementName] has failed. (Drive 8) | Yes |
| 806f060d-0409ffff | Array [ComputerSystemElementName] has failed. (Drive 9) | Yes |
| 806f060d-040affff | Array [ComputerSystemElementName] has failed. (Drive 10) | Yes |
| 806f060d-040bffff | Array [ComputerSystemElementName] has failed. (Drive 11) | Yes |
| 806f060d-040cffff | Array [ComputerSystemElementName] has failed. (Drive 12) | Yes |
| 806f060d-040dffff | Array [ComputerSystemElementName] has failed. (Drive 13) | Yes |
| 806f060d-040effff | Array [ComputerSystemElementName] has failed. (Drive 14) | Yes |
| 806f060d-040fffff | Array [ComputerSystemElementName] has failed. (Drive 15) | Yes |
| 806f060d-0410ffff | Array [ComputerSystemElementName] has failed. (Drive 16) | Yes |
| 806f060d-0411ffff | Array [ComputerSystemElementName] has failed. (Drive 17) | Yes |
| 806f060d-0412ffff | Array [ComputerSystemElementName] has failed. (Drive 18) | Yes |

*Table 16. Events that automatically notify Support (continued)*

| Event ID | Message String | Automatically Notify Support |
|---|---|---|
| 806f060d-0413ffff | Array [ComputerSystemElementName] has failed. (Drive 19) | Yes |
| 806f060d-0414ffff | Array [ComputerSystemElementName] has failed. (Drive 20) | Yes |
| 806f060d-0415ffff | Array [ComputerSystemElementName] has failed. (Drive 21) | Yes |
| 806f060d-0416ffff | Array [ComputerSystemElementName] has failed. (Drive 22) | Yes |
| 806f060d-0417ffff | Array [ComputerSystemElementName] has failed. (Drive 23) | Yes |
| 806f060d-0418ffff | Array [ComputerSystemElementName] has failed. (Drive 24) | Yes |
| 806f060d-0419ffff | Array [ComputerSystemElementName] has failed. (Drive 25) | Yes |
| 806f060d-041affff | Array [ComputerSystemElementName] has failed. (Drive 26) | Yes |
| 806f060d-041bffff | Array [ComputerSystemElementName] has failed. (Drive 27) | Yes |
| 806f060d-041cffff | Array [ComputerSystemElementName] has failed. (Drive 28) | Yes |
| 806f060d-041dffff | Array [ComputerSystemElementName] has failed. (Drive 29) | Yes |
| 806f060d-041effff | Array [ComputerSystemElementName] has failed. (Drive 30) | Yes |
| 806f060d-041fffff | Array [ComputerSystemElementName] has failed. (Drive 31) | Yes |
| 806f0813-2581ffff | A Uncorrectable Bus Error has occurred on system [ComputerSystemElementName]. (DIMMs) | Yes |
| 806f0813-2582ffff | A Uncorrectable Bus Error has occurred on system [ComputerSystemElementName]. (PCIs) | Yes |
| 806f0813-2584ffff | A Uncorrectable Bus Error has occurred on system [ComputerSystemElementName]. (CPUs) | Yes |

**40000001-00000000 Management Controller [arg1] Network Initialization Complete.**

**Explanation:** This message is for the use case where a Management Controller network has completed initialization.

May also be shown as 4000000100000000 or 0x4000000100000000

**Severity:** Info

**Alert Category:** System - IMM Network event

**Serviceable:** No

**CIM Information:** **Prefix:** IMM and **ID:** 0001

**SNMP Trap ID:** 37

**Automatically notify Support:** No

**User response:** Information only; no action is required.

---

**40000002-00000000 Certificate Authority [arg1] has detected a [arg2] Certificate Error.**

**Explanation:** This message is for the use case when there is an error with an SSL Server, SSL Client, or SSL Trusted CA Certificate.

May also be shown as 4000000200000000 or 0x4000000200000000

**Severity:** Error

**Alert Category:** System - SSL certification

**Serviceable:** No

**CIM Information:** **Prefix:** IMM and **ID:** 0002

**SNMP Trap ID:** 22

**Automatically notify Support:** No

**User response:** Make sure that the certificate that you are importing is correct and properly generated.

---

**40000003-00000000 Ethernet Data Rate modified from [arg1] to [arg2] by user [arg3].**

**Explanation:** This message is for the use case where a user modifies the Ethernet Port data rate.

May also be shown as 4000000300000000 or 0x4000000300000000

**Severity:** Info

**Alert Category:** none

**Serviceable:** No

**CIM Information:** **Prefix:** IMM and **ID:** 0003

**SNMP Trap ID:**

**Automatically notify Support:** No

**User response:** Information only; no action is required.

**40000004-00000000 Ethernet Duplex setting modified from [arg1] to [arg2] by user [arg3].**

**Explanation:** This message is for the use case where A user modifies the Ethernet Port duplex setting.

May also be shown as 4000000400000000 or 0x4000000400000000

**Severity:** Info

**Alert Category:** none

**Serviceable:** No

**CIM Information:** **Prefix:** IMM and **ID:** 0004

**SNMP Trap ID:**

**Automatically notify Support:** No

**User response:** Information only; no action is required.

---

**40000005-00000000 Ethernet MTU setting modified from [arg1] to [arg2] by user [arg3].**

**Explanation:** This message is for the use case where a user modifies the Ethernet Port MTU setting.

May also be shown as 4000000500000000 or 0x4000000500000000

**Severity:** Info

**Alert Category:** none

**Serviceable:** No

**CIM Information:** **Prefix:** IMM and **ID:** 0005

**SNMP Trap ID:**

**Automatically notify Support:** No

**User response:** Information only; no action is required.

---

**40000006-00000000 Ethernet locally administered MAC address modified from [arg1] to [arg2] by user [arg3].**

**Explanation:** This message is for the use case where a user modifies the Ethernet Port MAC address setting.

May also be shown as 4000000600000000 or 0x4000000600000000

**Severity:** Info

**Alert Category:** none

**Serviceable:** No

**CIM Information:** **Prefix:** IMM and **ID:** 0006

**SNMP Trap ID:**

**Automatically notify Support:** No

**User response:** Information only; no action is required.

**40000007-00000000 Ethernet interface [arg1] by user [arg2].**

**Explanation:** This message is for the use case where a user enables or disabled the ethernet interface.

May also be shown as 4000000700000000 or 0x4000000700000000

**Severity:** Info

**Alert Category:** none

**Serviceable:** No

**CIM Information:** **Prefix:** IMM and **ID:** 0007

**SNMP Trap ID:**

**Automatically notify Support:** No

**User response:** Information only; no action is required.

---

**40000008-00000000 Hostname set to [arg1] by user [arg2].**

**Explanation:** This message is for the use case where user modifies the Hostname of a Management Controller.

May also be shown as 4000000800000000 or 0x4000000800000000

**Severity:** Info

**Alert Category:** System - IMM Network event

**Serviceable:** No

**CIM Information:** **Prefix:** IMM and **ID:** 0008

**SNMP Trap ID:** 37

**Automatically notify Support:** No

**User response:** Information only; no action is required.

---

**40000009-00000000 IP address of network interface modified from [arg1] to [arg2] by user [arg3].**

**Explanation:** This message is for the use case where user modifies the IP address of a Management Controller.

May also be shown as 4000000900000000 or 0x4000000900000000

**Severity:** Info

**Alert Category:** System - IMM Network event

**Serviceable:** No

**CIM Information:** **Prefix:** IMM and **ID:** 0009

**SNMP Trap ID:** 37

**Automatically notify Support:** No

**User response:** Information only; no action is required.

**4000000a-00000000 IP subnet mask of network interface modified from [arg1] to [arg2] by user [arg3].**

**Explanation:** This message is for the use case where a user modifies the IP subnet mask of a Management Controller.

May also be shown as 4000000a00000000 or 0x4000000a00000000

**Severity:** Info

**Alert Category:** none

**Serviceable:** No

**CIM Information:** **Prefix:** IMM and **ID:** 0010

**SNMP Trap ID:**

**Automatically notify Support:** No

**User response:** Information only; no action is required.

---

**4000000b-00000000 IP address of default gateway modified from [arg1] to [arg2] by user [arg3].**

**Explanation:** This message is for the use case where a user modifies the default gateway IP address of a Management Controller.

May also be shown as 4000000b00000000 or 0x4000000b00000000

**Severity:** Info

**Alert Category:** none

**Serviceable:** No

**CIM Information:** **Prefix:** IMM and **ID:** 0011

**SNMP Trap ID:**

**Automatically notify Support:** No

**User response:** Information only; no action is required.

---

**4000000c-00000000 OS Watchdog response [arg1] by [arg2] .**

**Explanation:** This message is for the use case where an OS Watchdog has been enabled or disabled by a user.

May also be shown as 4000000c00000000 or 0x4000000c00000000

**Severity:** Warning

**Alert Category:** none

**Serviceable:** No

**CIM Information:** **Prefix:** IMM and **ID:** 0012

**SNMP Trap ID:**

**Automatically notify Support:** No

**User response:** Information only; no action is required.

**4000000d-00000000 DHCP[[arg1]] failure, no IP address assigned.**

**Explanation:** This message is for the use case where a DHCP server fails to assign an IP address to a Management Controller.

May also be shown as 4000000d00000000 or 0x4000000d00000000

**Severity:** Warning

**Alert Category:** none

**Serviceable:** No

**CIM Information:** **Prefix:** IMM and **ID:** 0013

**SNMP Trap ID:**

**Automatically notify Support:** No

**User response:** Complete the following steps until the problem is solved:

1. Make sure that the IMM network cable is connected.
2. Make sure that there is a DHCP server on the network that can assign an IP address to the IMM.

**4000000e-00000000 Remote Login Successful. Login ID: [arg1] from [arg2] at IP address [arg3].**

**Explanation:** This message is for the use case where a user successfully logs in to a Management Controller.

May also be shown as 4000000e00000000 or 0x4000000e00000000

**Severity:** Info

**Alert Category:** System - Remote Login

**Serviceable:** No

**CIM Information:** **Prefix:** IMM and **ID:** 0014

**SNMP Trap ID:** 30

**Automatically notify Support:** No

**User response:** Information only; no action is required.

**4000000f-00000000 Attempting to [arg1] server [arg2] by user [arg3].**

**Explanation:** This message is for the use case where a user is using the Management Controller to perform a power function on the system.

May also be shown as 4000000f00000000 or 0x4000000f00000000

**Severity:** Info

**Alert Category:** none

**Serviceable:** No

**CIM Information:** **Prefix:** IMM and **ID:** 0015

**SNMP Trap ID:**

**Automatically notify Support:** No

**User response:** Information only; no action is required.

**40000010-00000000 Security: Userid: [arg1] had [arg2] login failures from WEB client at IP address [arg3].**

**Explanation:** This message is for the use case where a user has failed to log in to a Management Controller from a web browser.

May also be shown as 4000001000000000 or 0x4000001000000000

**Severity:** Warning

**Alert Category:** System - Remote Login

**Serviceable:** No

**CIM Information:** **Prefix:** IMM and **ID:** 0016

**SNMP Trap ID:** 30

**Automatically notify Support:** No

**User response:** Complete the following steps until the problem is solved:

1. Make sure that the correct login ID and password are being used.
2. Have the system administrator reset the login ID or password.

---

**40000011-00000000 Security: Login ID: [arg1] had [arg2] login failures from CLI at [arg3].**

**Explanation:** This message is for the use case where a user has failed to log in to a Management Controller from the Legacy CLI.

May also be shown as 4000001100000000 or 0x4000001100000000

**Severity:** Warning

**Alert Category:** System - Remote Login

**Serviceable:** No

**CIM Information:** **Prefix:** IMM and **ID:** 0017

**SNMP Trap ID:** 30

**Automatically notify Support:** No

**User response:** Complete the following steps until the problem is solved:

1. Make sure that the correct login ID and password are being used.
2. Have the system administrator reset the login ID or password.

---

**40000012-00000000 Remote access attempt failed. Invalid userid or password received. Userid is [arg1] from WEB browser at IP address [arg2].**

**Explanation:** This message is for the use case where a remote user has failed to establish a remote control session from a Web browser session.

May also be shown as 4000001200000000 or 0x4000001200000000

**Severity:** Info

**Alert Category:** System - Remote Login

**Serviceable:** No

**CIM Information:** **Prefix:** IMM and **ID:** 0018

**SNMP Trap ID:** 30

**Automatically notify Support:** No

**User response:** Make sure that the correct login ID and password are being used.

**40000013-00000000 Remote access attempt failed. Invalid userid or password received. Userid is [arg1] from TELNET client at IP address [arg2].**

**Explanation:** This message is for the use case where a user has failed to log in to a Management Controller from a telnet session.

May also be shown as 4000001300000000 or 0x4000001300000000

**Severity:** Info

**Alert Category:** System - Remote Login

**Serviceable:** No

**CIM Information:** **Prefix:** IMM and **ID:** 0019

**SNMP Trap ID:** 30

**Automatically notify Support:** No

**User response:** Make sure that the correct login ID and password are being used.

---

**40000014-00000000 The [arg1] on system [arg2] cleared by user [arg3].**

**Explanation:** This message is for the use case where a Management Controller Event Log on a system is cleared by a user.

May also be shown as 4000001400000000 or 0x4000001400000000

**Severity:** Info

**Alert Category:** none

**Serviceable:** No

**CIM Information:** **Prefix:** IMM and **ID:** 0020

**SNMP Trap ID:**

**Automatically notify Support:** No

**User response:** Information only; no action is required.

---

**40000015-00000000 Management Controller [arg1] reset was initiated by user [arg2].**

**Explanation:** This message is for the use case where a Management Controller reset is initiated by a user.

May also be shown as 4000001500000000 or 0x4000001500000000

**Severity:** Info

**Alert Category:** none

**Serviceable:** No

**CIM Information:** **Prefix:** IMM and **ID:** 0021

**SNMP Trap ID:**

**Automatically notify Support:** No

**User response:** Information only; no action is required.

**40000016-00000000 ENET[[arg1]] DHCP-HSTN=[arg2], DN=[arg3], IP@=[arg4], SN=[arg5], GW@=[arg6], DNS1@=[arg7] .**

**Explanation:** This message is for the use case where a Management Controller IP address and configuration has been assigned by the DHCP server.

May also be shown as 4000001600000000 or 0x4000001600000000

**Severity:** Info

**Alert Category:** none

**Serviceable:** No

**CIM Information:** **Prefix:** IMM and **ID:** 0022

**SNMP Trap ID:**

**Automatically notify Support:** No

**User response:** Information only; no action is required.

---

**40000017-00000000 ENET[[arg1]] IP-Cfg:HstName=[arg2], IP@=[arg3] ,NetMsk=[arg4], GW@=[arg5] .**

**Explanation:** This message is for the use case where a Management Controller IP address and configuration has been assigned statically using user data.

May also be shown as 4000001700000000 or 0x4000001700000000

**Severity:** Info

**Alert Category:** none

**Serviceable:** No

**CIM Information:** **Prefix:** IMM and **ID:** 0023

**SNMP Trap ID:**

**Automatically notify Support:** No

**User response:** Information only; no action is required.

---

**40000018-00000000 LAN: Ethernet[[arg1]] interface is no longer active.**

**Explanation:** This message is for the use case where a Management Controller ethernet interface is no longer active.

May also be shown as 4000001800000000 or 0x4000001800000000

**Severity:** Info

**Alert Category:** none

**Serviceable:** No

**CIM Information:** **Prefix:** IMM and **ID:** 0024

**SNMP Trap ID:**

**Automatically notify Support:** No

**User response:** Information only; no action is required.

**40000019-00000000 LAN: Ethernet[[arg1]] interface is now active.**

**Explanation:** This message is for the use case where a Management Controller ethernet interface is now active.

May also be shown as 4000001900000000 or 0x4000001900000000

**Severity:** Info

**Alert Category:** none

**Serviceable:** No

**CIM Information:** **Prefix:** IMM and **ID:** 0025

**SNMP Trap ID:**

**Automatically notify Support:** No

**User response:** Information only; no action is required.

---

**4000001a-00000000 DHCP setting changed to [arg1] by user [arg2].**

**Explanation:** This message is for the use case where a user changes the DHCP setting.

May also be shown as 4000001a00000000 or 0x4000001a00000000

**Severity:** Info

**Alert Category:** none

**Serviceable:** No

**CIM Information:** **Prefix:** IMM and **ID:** 0026

**SNMP Trap ID:**

**Automatically notify Support:** No

**User response:** Information only; no action is required.

---

**4000001b-00000000 Management Controller [arg1]: Configuration restored from a file by user [arg2].**

**Explanation:** This message is for the use case where a user restores a Management Controller configuration from a file.

May also be shown as 4000001b00000000 or 0x4000001b00000000

**Severity:** Info

**Alert Category:** none

**Serviceable:** No

**CIM Information:** **Prefix:** IMM and **ID:** 0027

**SNMP Trap ID:**

**Automatically notify Support:** No

**User response:** Information only; no action is required.

**4000001c-00000000 Watchdog [arg1] Screen Capture Occurred .**

**Explanation:** This message is for the use case where an operating system error has occurred and the screen was captured.

May also be shown as 4000001c00000000 or 0x4000001c00000000

**Severity:** Info

**Alert Category:** System - other

**Serviceable:** No

**CIM Information:** **Prefix:** IMM and **ID:** 0028

**SNMP Trap ID:** 22

**Automatically notify Support:** No

**User response:** If there was no operating-system error, complete the following steps until the problem is solved:

1. Reconfigure the watchdog timer to a higher value.
2. Make sure that the IMM Ethernet-over-USB interface is enabled.
3. Reinstall the RNDIS or cdc_ether device driver for the operating system.
4. Disable the watchdog.

If there was an operating-system error, check the integrity of the installed operating system.

**4000001d-00000000 Watchdog [arg1] Failed to Capture Screen.**

**Explanation:** This message is for the use case where an operating system error has occurred and the screen capture failed.

May also be shown as 4000001d00000000 or 0x4000001d00000000

**Severity:** Error

**Alert Category:** System - other

**Serviceable:** No

**CIM Information:** **Prefix:** IMM and **ID:** 0029

**SNMP Trap ID:** 22

**Automatically notify Support:** No

**User response:** Complete the following steps until the problem is solved:

1. Reconfigure the watchdog timer to a higher value.
2. Make sure that the IMM Ethernet over USB interface is enabled.
3. Reinstall the RNDIS or cdc_ether device driver for the operating system.
4. Disable the watchdog. Check the integrity of the installed operating system.
5. Update the IMM firmware. Important: Some cluster solutions require specific code levels or coordinated code updates. If the device is part of a cluster solution, verify that the latest level of code is supported for the cluster solution before you update the code.

**4000001e-00000000 Running the backup Management Controller [arg1] main application.**

**Explanation:** This message is for the use case where a Management Controller has resorted to running the backup main application.

May also be shown as 4000001e00000000 or 0x4000001e00000000

**Severity:** Warning

**Alert Category:** System - other

**Serviceable:** No

**CIM Information:** **Prefix:** IMM and **ID:** 0030

**SNMP Trap ID:** 22

**Automatically notify Support:** No

**User response:** Update the IMM firmware. Important: Some cluster solutions require specific code levels or coordinated code updates. If the device is part of a cluster solution, verify that the latest level of code is supported for the cluster solution before you update the code.

**4000001f-00000000 Please ensure that the Management Controller [arg1] is flashed with the correct firmware. The Management Controller is unable to match its firmware to the server.**

**Explanation:** This message is for the use case where a Management Controller firmware version does not match the server.

May also be shown as 4000001f00000000 or 0x4000001f00000000

**Severity:** Error

**Alert Category:** System - other

**Serviceable:** No

**CIM Information:** **Prefix:** IMM and **ID:** 0031

**SNMP Trap ID:** 22

**Automatically notify Support:** No

**User response:** Update the IMM firmware to a version that the server supports. Important: Some cluster solutions require specific code levels or coordinated code updates. If the device is part of a cluster solution, verify that the latest level of code is supported for the cluster solution before you update the code.

**40000020-00000000 Management Controller [arg1] Reset was caused by restoring default values.**

**Explanation:** This message is for the use case where a Management Controller has been reset due to a user restoring the configuration to default values.

May also be shown as 4000002000000000 or 0x4000002000000000

**Severity:** Info

**Alert Category:** none

**Serviceable:** No

**CIM Information:** **Prefix:** IMM and **ID:** 0032

**SNMP Trap ID:**

**Automatically notify Support:** No

**User response:** Information only; no action is required.

**40000021-00000000 Management Controller [arg1] clock has been set from NTP server [arg2].**

**Explanation:** This message is for the use case where a Management Controller clock has been set from the Network Time Protocol server.

May also be shown as 4000002100000000 or 0x4000002100000000

**Severity:** Info

**Alert Category:** none

**Serviceable:** No

**CIM Information:** **Prefix:** IMM and **ID:** 0033

**SNMP Trap ID:**

**Automatically notify Support:** No

**User response:** Information only; no action is required.

---

**40000022-00000000 SSL data in the Management Controller [arg1] configuruation data is invalid. Clearing configuration data region and disabling SSL.**

**Explanation:** This message is for the use case where a Management Controller has detected invalid SSL data in the configuration data and is clearing the configuration data region and disabling the SSL.

May also be shown as 4000002200000000 or 0x4000002200000000

**Severity:** Error

**Alert Category:** System - other

**Serviceable:** No

**CIM Information:** **Prefix:** IMM and **ID:** 0034

**SNMP Trap ID:** 22

**Automatically notify Support:** No

**User response:** Complete the following steps until the problem is solved:

1. Make sure that the certificate that you are importing is correct.
2. Try to import the certificate again.

---

**40000023-00000000 Flash of [arg1] from [arg2] succeeded for user [arg3] .**

**Explanation:** This message is for the use case where a user has successfully flashed the firmware component (MC Main Application, MC Boot ROM, BIOS, Diagnostics, System Power Backplane, Remote Expansion Enclosure Power Backplane, Integrated System Management Processor, or Remote Expansion Enclosure Processor) from the interface and IP address ( %d.

May also be shown as 4000002300000000 or 0x4000002300000000

**Severity:** Info

**Alert Category:** none

**Serviceable:** No

**CIM Information:** **Prefix:** IMM and **ID:** 0035

**SNMP Trap ID:**

**Automatically notify Support:** No

**User response:** Information only; no action is required.

**40000024-00000000 Flash of [arg1] from [arg2] failed for user [arg3].**

**Explanation:** This message is for the use case where a user has not flashed the firmware component from the interface and IP address due to a failure.

May also be shown as 4000002400000000 or 0x4000002400000000

**Severity:** Info

**Alert Category:** System - other

**Serviceable:** No

**CIM Information:** **Prefix:** IMM and **ID:** 0036

**SNMP Trap ID:** 22

**Automatically notify Support:** No

**User response:** Information only; no action is required.

---

**40000025-00000000 The [arg1] on system [arg2] is 75% full.**

**Explanation:** This message is for the use case where a Management Controller Event Log on a system is 75% full.

May also be shown as 4000002500000000 or 0x4000002500000000

**Severity:** Info

**Alert Category:** System - Event Log 75% full

**Serviceable:** No

**CIM Information:** **Prefix:** IMM and **ID:** 0037

**SNMP Trap ID:** 35

**Automatically notify Support:** No

**User response:** Information only; no action is required.

---

**40000026-00000000 The [arg1] on system [arg2] is 100% full.**

**Explanation:** This message is for the use case where a Management Controller Event Log on a system is 100% full.

May also be shown as 4000002600000000 or 0x4000002600000000

**Severity:** Info

**Alert Category:** System - Event Log 75% full

**Serviceable:** No

**CIM Information:** **Prefix:** IMM and **ID:** 0038

**SNMP Trap ID:** 35

**Automatically notify Support:** No

**User response:** To avoid losing older log entries, save the log as a text file and clear the log.

**40000027-00000000 Platform Watchdog Timer expired for [arg1].**

**Explanation:** This message is for the use case when an implementation has detected a Platform Watchdog Timer Expired

May also be shown as 4000002700000000 or 0x4000002700000000

**Severity:** Error

**Alert Category:** System - OS Timeout

**Serviceable:** No

**CIM Information:** **Prefix:** IMM and **ID:** 0039

**SNMP Trap ID:** 21

**Automatically notify Support:** No

**User response:** Complete the following steps until the problem is solved:

1. Reconfigure the watchdog timer to a higher value.
2. Make sure that the IMM Ethernet-over-USB interface is enabled.
3. Reinstall the RNDIS or cdc_ether device driver for the operating system.
4. Disable the watchdog.
5. Check the integrity of the installed operating system.

**40000028-00000000 Management Controller Test Alert Generated by [arg1].**

**Explanation:** This message is for the use case where a user has generated a Test Alert.

May also be shown as 4000002800000000 or 0x4000002800000000

**Severity:** Info

**Alert Category:** System - other

**Serviceable:** No

**CIM Information:** **Prefix:** IMM and **ID:** 0040

**SNMP Trap ID:** 22

**Automatically notify Support:** No

**User response:** Information only; no action is required.

**40000029-00000000 Security: Userid: [arg1] had [arg2] login failures from an SSH client at IP address [arg3].**

**Explanation:** This message is for the use case where a user has failed to log in to a Management Controller from SSH.

May also be shown as 4000002900000000 or 0x4000002900000000

**Severity:** Info

**Alert Category:** System - Remote Login

**Serviceable:** No

**CIM Information:** **Prefix:** IMM and **ID:** 0041

**SNMP Trap ID:** 30

**Automatically notify Support:** No

**User response:** Complete the following steps until the problem is solved:

1. Make sure that the correct login ID and password are being used.
2. Have the system administrator reset the login ID or password.

**4000002a-00000000 [arg1] firmware mismatch internal to system [arg2]. Please attempt to flash the [arg3] firmware.**

**Explanation:** This message is for the use case where a specific type of firmware mismatch has been detected.

May also be shown as 4000002a00000000 or 0x4000002a00000000

**Severity:** Error

**Alert Category:** System - Other

**Serviceable:** No

**CIM Information:** **Prefix:** IMM and **ID:** 0042

**SNMP Trap ID:** 22

**Automatically notify Support:** No

**User response:** Reflash the IMM firmware to the latest version.

---

**4000002b-00000000 Domain name set to [arg1].**

**Explanation:** Domain name set by user

May also be shown as 4000002b00000000 or 0x4000002b00000000

**Severity:** Info

**Alert Category:** none

**Serviceable:** No

**CIM Information:** **Prefix:** IMM and **ID:** 0043

**SNMP Trap ID:**

**Automatically notify Support:** No

**User response:** Information only; no action is required.

---

**4000002c-00000000 Domain Source changed to [arg1] by user [arg2].**

**Explanation:** Domain source changed by user

May also be shown as 4000002c00000000 or 0x4000002c00000000

**Severity:** Info

**Alert Category:** none

**Serviceable:** No

**CIM Information:** **Prefix:** IMM and **ID:** 0044

**SNMP Trap ID:**

**Automatically notify Support:** No

**User response:** Information only; no action is required.

**4000002d-00000000 DDNS setting changed to [arg1] by user [arg2].**

**Explanation:** DDNS setting changed by user

May also be shown as 4000002d00000000 or 0x4000002d00000000

**Severity:** Info

**Alert Category:** none

**Serviceable:** No

**CIM Information:** **Prefix:** IMM and **ID:** 0045

**SNMP Trap ID:**

**Automatically notify Support:** No

**User response:** Information only; no action is required.

---

**4000002e-00000000 DDNS registration successful. The domain name is [arg1].**

**Explanation:** DDNS registation and values

May also be shown as 4000002e00000000 or 0x4000002e00000000

**Severity:** Info

**Alert Category:** none

**Serviceable:** No

**CIM Information:** **Prefix:** IMM and **ID:** 0046

**SNMP Trap ID:**

**Automatically notify Support:** No

**User response:** Information only; no action is required.

---

**4000002f-00000000 IPv6 enabled by user [arg1] .**

**Explanation:** IPv6 protocol is enabled by user

May also be shown as 4000002f00000000 or 0x4000002f00000000

**Severity:** Info

**Alert Category:** none

**Serviceable:** No

**CIM Information:** **Prefix:** IMM and **ID:** 0047

**SNMP Trap ID:**

**Automatically notify Support:** No

**User response:** Information only; no action is required.

**40000030-00000000 IPv6 disabled by user [arg1] .**

**Explanation:** IPv6 protocol is disabled by user

May also be shown as 4000003000000000 or 0x4000003000000000

**Severity:** Info

**Alert Category:** none

**Serviceable:** No

**CIM Information:** **Prefix:** IMM and **ID:** 0048

**SNMP Trap ID:**

**Automatically notify Support:** No

**User response:** Information only; no action is required.

---

**40000031-00000000 IPv6 static IP configuration enabled by user [arg1].**

**Explanation:** IPv6 static address assignment method is enabled by user

May also be shown as 4000003100000000 or 0x4000003100000000

**Severity:** Info

**Alert Category:** none

**Serviceable:** No

**CIM Information:** **Prefix:** IMM and **ID:** 0049

**SNMP Trap ID:**

**Automatically notify Support:** No

**User response:** Information only; no action is required.

---

**40000032-00000000 IPv6 DHCP enabled by user [arg1].**

**Explanation:** IPv6 DHCP assignment method is enabled by user

May also be shown as 4000003200000000 or 0x4000003200000000

**Severity:** Info

**Alert Category:** none

**Serviceable:** No

**CIM Information:** **Prefix:** IMM and **ID:** 0050

**SNMP Trap ID:**

**Automatically notify Support:** No

**User response:** Information only; no action is required.

**40000033-00000000 IPv6 stateless auto-configuration enabled by user [arg1].**

**Explanation:** IPv6 statless auto-assignment method is enabled by user

May also be shown as 4000003300000000 or 0x4000003300000000

**Severity:** Info

**Alert Category:** none

**Serviceable:** No

**CIM Information:** **Prefix:** IMM and **ID:** 0051

**SNMP Trap ID:**

**Automatically notify Support:** No

**User response:** Information only; no action is required.

---

**40000034-00000000 IPv6 static IP configuration disabled by user [arg1].**

**Explanation:** IPv6 static assignment method is disabled by user

May also be shown as 4000003400000000 or 0x4000003400000000

**Severity:** Info

**Alert Category:** none

**Serviceable:** No

**CIM Information:** **Prefix:** IMM and **ID:** 0052

**SNMP Trap ID:**

**Automatically notify Support:** No

**User response:** Information only; no action is required.

---

**40000035-00000000 IPv6 DHCP disabled by user [arg1].**

**Explanation:** IPv6 DHCP assignment method is disabled by user

May also be shown as 4000003500000000 or 0x4000003500000000

**Severity:** Info

**Alert Category:** none

**Serviceable:** No

**CIM Information:** **Prefix:** IMM and **ID:** 0053

**SNMP Trap ID:**

**Automatically notify Support:** No

**User response:** Information only; no action is required.

**40000036-00000000 IPv6 stateless auto-configuration disabled by user [arg1].**

**Explanation:** IPv6 statless auto-assignment method is disabled by user

May also be shown as 4000003600000000 or 0x4000003600000000

**Severity:** Info

**Alert Category:** none

**Serviceable:** No

**CIM Information:** **Prefix:** IMM and **ID:** 0054

**SNMP Trap ID:**

**Automatically notify Support:** No

**User response:** Information only; no action is required.

---

**40000037-00000000 ENET[[arg1]] IPv6-LinkLocal:HstName=[arg2], IP@=[arg3] ,Pref=[arg4] .**

**Explanation:** IPv6 Link Local address is active

May also be shown as 4000003700000000 or 0x4000003700000000

**Severity:** Info

**Alert Category:** none

**Serviceable:** No

**CIM Information:** **Prefix:** IMM and **ID:** 0055

**SNMP Trap ID:**

**Automatically notify Support:** No

**User response:** Information only; no action is required.

---

**40000038-00000000 ENET[[arg1]] IPv6-Static:HstName=[arg2], IP@=[arg3] ,Pref=[arg4], GW@=[arg5] .**

**Explanation:** IPv6 Static address is active

May also be shown as 4000003800000000 or 0x4000003800000000

**Severity:** Info

**Alert Category:** none

**Serviceable:** No

**CIM Information:** **Prefix:** IMM and **ID:** 0056

**SNMP Trap ID:**

**Automatically notify Support:** No

**User response:** Information only; no action is required.

**40000039-00000000 ENET[[arg1]] DHCPv6-HSTN=[arg2], DN=[arg3], IP@=[arg4], Pref=[arg5].**

**Explanation:** IPv6 DHCP-assigned address is active

May also be shown as 4000003900000000 or 0x4000003900000000

**Severity:** Info

**Alert Category:** none

**Serviceable:** No

**CIM Information:** **Prefix:** IMM and **ID:** 0057

**SNMP Trap ID:**

**Automatically notify Support:** No

**User response:** Information only; no action is required.

---

**4000003a-00000000 IPv6 static address of network interface modified from [arg1] to [arg2] by user [arg3].**

**Explanation:** A user modifies the IPv6 static address of a Management Controller

May also be shown as 4000003a00000000 or 0x4000003a00000000

**Severity:** Info

**Alert Category:** none

**Serviceable:** No

**CIM Information:** **Prefix:** IMM and **ID:** 0058

**SNMP Trap ID:**

**Automatically notify Support:** No

**User response:** Information only; no action is required.

---

**4000003b-00000000 DHCPv6 failure, no IP address assigned.**

**Explanation:** S DHCP6 server fails to assign an IP address to a Management Controller.

May also be shown as 4000003b00000000 or 0x4000003b00000000

**Severity:** Warning

**Alert Category:** none

**Serviceable:** No

**CIM Information:** **Prefix:** IMM and **ID:** 0059

**SNMP Trap ID:**

**Automatically notify Support:** No

**User response:** Complete the following steps until the problem is solved:

1. Make sure that the IMM network cable is connected.
2. Make sure that there is a DHCPv6 server on the network that can assign an IP address to the IMM.

**4000003c-00000000 Platform Watchdog Timer expired for [arg1].**

**Explanation:** An implementation has detected an OS Loader Watchdog Timer Expired

May also be shown as 4000003c00000000 or 0x4000003c00000000

**Severity:** Error

**Alert Category:** System - Loader timeout

**Serviceable:** No

**CIM Information:** **Prefix:** IMM and **ID:** 0060

**SNMP Trap ID:** 26

**Automatically notify Support:** No

**User response:**

1. Reconfigure the watchdog timer to a higher value.
2. Make sure that the IMM Ethernet over USB interface is enabled.
3. Reinstall the RNDIS or cdc_ether device driver for the operating system.
4. Disable the watchdog.
5. Check the integrity of the installed operating system.

---

**4000003d-00000000 Telnet port number changed from [arg1] to [arg2] by user [arg3].**

**Explanation:** A user has modified the telnet port number

May also be shown as 4000003d00000000 or 0x4000003d00000000

**Severity:** Info

**Alert Category:** none

**Serviceable:** No

**CIM Information:** **Prefix:** IMM and **ID:** 0061

**SNMP Trap ID:**

**Automatically notify Support:** No

**User response:** Information only; no action is required.

---

**4000003e-00000000 SSH port number changed from [arg1] to [arg2] by user [arg3].**

**Explanation:** A user has modified the SSH port number

May also be shown as 4000003e00000000 or 0x4000003e00000000

**Severity:** Info

**Alert Category:** none

**Serviceable:** No

**CIM Information:** **Prefix:** IMM and **ID:** 0062

**SNMP Trap ID:**

**Automatically notify Support:** No

**User response:** Information only; no action is required.

**4000003f-00000000 Web-HTTP port number changed from [arg1] to [arg2] by user [arg3].**

**Explanation:** A user has modified the Web HTTP port number

May also be shown as 4000003f00000000 or 0x4000003f00000000

**Severity:** Info

**Alert Category:** none

**Serviceable:** No

**CIM Information:** **Prefix:** IMM and **ID:** 0063

**SNMP Trap ID:**

**Automatically notify Support:** No

**User response:** Information only; no action is required.

---

**40000040-00000000 Web-HTTPS port number changed from [arg1] to [arg2] by user [arg3].**

**Explanation:** A user has modified the Web HTTPS port number

May also be shown as 4000004000000000 or 0x4000004000000000

**Severity:** Info

**Alert Category:** none

**Serviceable:** No

**CIM Information:** **Prefix:** IMM and **ID:** 0064

**SNMP Trap ID:**

**Automatically notify Support:** No

**User response:** Information only; no action is required.

---

**40000041-00000000 CIM/XML HTTP port number changed from [arg1] to [arg2] by user [arg3].**

**Explanation:** A user has modified the CIM HTTP port number

May also be shown as 4000004100000000 or 0x4000004100000000

**Severity:** Info

**Alert Category:** none

**Serviceable:** No

**CIM Information:** **Prefix:** IMM and **ID:** 0065

**SNMP Trap ID:**

**Automatically notify Support:** No

**User response:** Information only; no action is required.

**40000042-00000000 CIM/XML HTTPS port number changed from [arg1] to [arg2] by user [arg3].**

**Explanation:** A user has modified the CIM HTTPS port number

May also be shown as 4000004200000000 or 0x4000004200000000

**Severity:** Info

**Alert Category:** none

**Serviceable:** No

**CIM Information:** **Prefix:** IMM and **ID:** 0066

**SNMP Trap ID:**

**Automatically notify Support:** No

**User response:** Information only; no action is required.

---

**40000043-00000000 SNMP Agent port number changed from [arg1] to [arg2] by user [arg3].**

**Explanation:** A user has modified the SNMP Agent port number

May also be shown as 4000004300000000 or 0x4000004300000000

**Severity:** Info

**Alert Category:** none

**Serviceable:** No

**CIM Information:** **Prefix:** IMM and **ID:** 0067

**SNMP Trap ID:**

**Automatically notify Support:** No

**User response:** Information only; no action is required.

---

**40000044-00000000 SNMP Traps port number changed from [arg1] to [arg2] by user [arg3].**

**Explanation:** A user has modified the SNMP Traps port number

May also be shown as 4000004400000000 or 0x4000004400000000

**Severity:** Info

**Alert Category:** none

**Serviceable:** No

**CIM Information:** **Prefix:** IMM and **ID:** 0068

**SNMP Trap ID:**

**Automatically notify Support:** No

**User response:** Information only; no action is required.

**40000045-00000000 Syslog port number changed from [arg1] to [arg2] by user [arg3].**

**Explanation:** A user has modified the Syslog receiver port number

May also be shown as 4000004500000000 or 0x4000004500000000

**Severity:** Info

**Alert Category:** none

**Serviceable:** No

**CIM Information:** **Prefix:** IMM and **ID:** 0069

**SNMP Trap ID:**

**Automatically notify Support:** No

**User response:** Information only; no action is required.

---

**40000046-00000000 Remote Presence port number changed from [arg1] to [arg2] by user [arg3].**

**Explanation:** A user has modified the Remote Presence port number

May also be shown as 4000004600000000 or 0x4000004600000000

**Severity:** Info

**Alert Category:** none

**Serviceable:** No

**CIM Information:** **Prefix:** IMM and **ID:** 0070

**SNMP Trap ID:**

**Automatically notify Support:** No

**User response:** Information only; no action is required.

---

**40000047-00000000 LED [arg1] state changed to [arg2] by [arg3].**

**Explanation:** A user has modified the state of an LED

May also be shown as 4000004700000000 or 0x4000004700000000

**Severity:** Info

**Alert Category:** none

**Serviceable:** No

**CIM Information:** **Prefix:** IMM and **ID:** 0071

**SNMP Trap ID:**

**Automatically notify Support:** No

**User response:** Information only; no action is required.

**40000048-00000000 Inventory data changed for device [arg1], new device data hash=[arg2], new master data hash=[arg3] .**

**Explanation:** Something has caused the physical inventory to change

May also be shown as 4000004800000000 or 0x4000004800000000

**Severity:** Info

**Alert Category:** none

**Serviceable:** No

**CIM Information:** **Prefix:** IMM and **ID:** 0072

**SNMP Trap ID:**

**Automatically notify Support:** No

**User response:** Information only; no action is required.

---

**40000049-00000000 SNMP [arg1] enabled by user [arg2] .**

**Explanation:** A user enabled SNMPv1 or SNMPv3 or Traps

May also be shown as 4000004900000000 or 0x4000004900000000

**Severity:** Info

**Alert Category:** none

**Serviceable:** No

**CIM Information:** **Prefix:** IMM and **ID:** 0073

**SNMP Trap ID:**

**Automatically notify Support:** No

**User response:** Information only; no action is required.

---

**4000004a-00000000 SNMP [arg1] disabled by user [arg2] .**

**Explanation:** A user disabled SNMPv1 or SNMPv3 or Traps

May also be shown as 4000004a00000000 or 0x4000004a00000000

**Severity:** Info

**Alert Category:** none

**Serviceable:** No

**CIM Information:** **Prefix:** IMM and **ID:** 0074

**SNMP Trap ID:**

**Automatically notify Support:** No

**User response:** Information only; no action is required.

**4000004b-00000000 SNMPv1 [arg1] set by user [arg2]: Name=[arg3], AccessType=[arg4], Address=[arg5], .**

**Explanation:** A user changed the SNMP community string

May also be shown as 4000004b00000000 or 0x4000004b00000000

**Severity:** Info

**Alert Category:** none

**Serviceable:** No

**CIM Information:** **Prefix:** IMM and **ID:** 0075

**SNMP Trap ID:**

**Automatically notify Support:** No

**User response:** Information only; no action is required.

---

**4000004c-00000000 LDAP Server configuration set by user [arg1]: SelectionMethod=[arg2], DomainName=[arg3], Server1=[arg4], Server2=[arg5], Server3=[arg6], Server4=[arg7].**

**Explanation:** A user changed the LDAP server configuration

May also be shown as 4000004c00000000 or 0x4000004c00000000

**Severity:** Info

**Alert Category:** none

**Serviceable:** No

**CIM Information:** **Prefix:** IMM and **ID:** 0076

**SNMP Trap ID:**

**Automatically notify Support:** No

**User response:** Information only; no action is required.

---

**4000004d-00000000 LDAP set by user [arg1]: RootDN=[arg2], UIDSearchAttribute=[arg3], BindingMethod=[arg4], EnhancedRBS=[arg5], TargetName=[arg6], GroupFilter=[arg7], GroupAttribute=[arg8], LoginAttribute=[arg9].**

**Explanation:** A user configured an LDAP Miscellaneous setting

May also be shown as 4000004d00000000 or 0x4000004d00000000

**Severity:** Info

**Alert Category:** none

**Serviceable:** No

**CIM Information:** **Prefix:** IMM and **ID:** 0077

**SNMP Trap ID:**

**Automatically notify Support:** No

**User response:** Information only; no action is required.

**4000004e-00000000 Serial Redirection set by user [arg1]: Mode=[arg2], BaudRate=[arg3], StopBits=[arg4], Parity=[arg5], SessionTerminateSequence=[arg6].**

**Explanation:** A user configured the Serial Port mode

May also be shown as 4000004e00000000 or 0x4000004e00000000

**Severity:** Info

**Alert Category:** none

**Serviceable:** No

**CIM Information:** **Prefix:** IMM and **ID:** 0078

**SNMP Trap ID:**

**Automatically notify Support:** No

**User response:** Information only; no action is required.

---

**4000004f-00000000 Date and Time set by user [arg1]: Date=[arg2], Time-[arg3], DST Auto-adjust=[arg4], Timezone=[arg5].**

**Explanation:** A user configured the Date and Time settings

May also be shown as 4000004f00000000 or 0x4000004f00000000

**Severity:** Info

**Alert Category:** none

**Serviceable:** No

**CIM Information:** **Prefix:** IMM and **ID:** 0079

**SNMP Trap ID:**

**Automatically notify Support:** No

**User response:** Information only; no action is required.

---

**40000050-00000000 Server General Settings set by user [arg1]: Name=[arg2], Contact=[arg3], Location=[arg4], Room=[arg5], RackID=[arg6], Rack U-position=[arg7].**

**Explanation:** A user configured the Location setting

May also be shown as 4000005000000000 or 0x4000005000000000

**Severity:** Info

**Alert Category:** none

**Serviceable:** No

**CIM Information:** **Prefix:** IMM and **ID:** 0080

**SNMP Trap ID:**

**Automatically notify Support:** No

**User response:** Information only; no action is required.

**40000051-00000000 Server Power Off Delay set to [arg1] by user [arg2].**

**Explanation:** A user configured the Server Power Off Delay

May also be shown as 4000005100000000 or 0x4000005100000000

**Severity:** Info

**Alert Category:** none

**Serviceable:** No

**CIM Information:** **Prefix:** IMM and **ID:** 0081

**SNMP Trap ID:**

**Automatically notify Support:** No

**User response:** Information only; no action is required.

---

**40000052-00000000 Server [arg1] scheduled for [arg2] at [arg3] by user [arg4].**

**Explanation:** A user configured a Server Power action at a specific time

May also be shown as 4000005200000000 or 0x4000005200000000

**Severity:** Info

**Alert Category:** none

**Serviceable:** No

**CIM Information:** **Prefix:** IMM and **ID:** 0082

**SNMP Trap ID:**

**Automatically notify Support:** No

**User response:** Information only; no action is required.

---

**40000053-00000000 Server [arg1] scheduled for every [arg2] at [arg3] by user [arg4].**

**Explanation:** A user configured a recurring Server Power Action

May also be shown as 4000005300000000 or 0x4000005300000000

**Severity:** Info

**Alert Category:** none

**Serviceable:** No

**CIM Information:** **Prefix:** IMM and **ID:** 0083

**SNMP Trap ID:**

**Automatically notify Support:** No

**User response:** Information only; no action is required.

**40000054-00000000 Server [arg1] [arg2] cleared by user [arg3].**

**Explanation:** A user cleared a Server Power Action.

May also be shown as 4000005400000000 or 0x4000005400000000

**Severity:** Info

**Alert Category:** none

**Serviceable:** No

**CIM Information:** **Prefix:** IMM and **ID:** 0084

**SNMP Trap ID:**

**Automatically notify Support:** No

**User response:** Information only; no action is required.

---

**40000055-00000000 Synchronize time setting by user [arg1]: Mode=[arg2], NTPServerHost=[arg3]:[arg4],NTPUpdateFrequency=[arg5].**

**Explanation:** A user configured the Date and Time synchronize settings

May also be shown as 4000005500000000 or 0x4000005500000000

**Severity:** Info

**Alert Category:** none

**Serviceable:** No

**CIM Information:** **Prefix:** IMM and **ID:** 0085

**SNMP Trap ID:**

**Automatically notify Support:** No

**User response:** Information only; no action is required.

---

**40000056-00000000 SMTP Server set by user [arg1] to [arg2]:[arg3].**

**Explanation:** A user configured the SMTP server

May also be shown as 4000005600000000 or 0x4000005600000000

**Severity:** Info

**Alert Category:** none

**Serviceable:** No

**CIM Information:** **Prefix:** IMM and **ID:** 0086

**SNMP Trap ID:**

**Automatically notify Support:** No

**User response:** Information only; no action is required.

**40000057-00000000 Telnet [arg1] by user [arg2].**

**Explanation:** A user enables or disables Telnet services

May also be shown as 4000005700000000 or 0x4000005700000000

**Severity:** Info

**Alert Category:** none

**Serviceable:** No

**CIM Information:** **Prefix:** IMM and **ID:** 0087

**SNMP Trap ID:**

**Automatically notify Support:** No

**User response:** Information only; no action is required.

---

**40000058-00000000 DNS servers set by user [arg1]: UseAdditionalServers=[arg2], PreferredDNStype=[arg3], IPv4Server1=[arg4], IPv4Server2=[arg5], IPv4Server3=[arg6], IPv6Server1=[arg7], IPv6Server2=[arg8], IPv6Server3=[arg9].**

**Explanation:** A user configures the DNS servers

May also be shown as 4000005800000000 or 0x4000005800000000

**Severity:** Info

**Alert Category:** none

**Serviceable:** No

**CIM Information:** **Prefix:** IMM and **ID:** 0088

**SNMP Trap ID:**

**Automatically notify Support:** No

**User response:** Information only; no action is required.

---

**40000059-00000000 LAN over USB [arg1] by user [arg2].**

**Explanation:** A user configured USB-LAN

May also be shown as 4000005900000000 or 0x4000005900000000

**Severity:** Info

**Alert Category:** none

**Serviceable:** No

**CIM Information:** **Prefix:** IMM and **ID:** 0089

**SNMP Trap ID:**

**Automatically notify Support:** No

**User response:** Information only; no action is required.

**4000005a-00000000 LAN over USB Port Forwarding set by user [arg1]: ExternalPort=[arg2], USB-LAN port=[arg3].**

**Explanation:** A user configured USB-LAN port forwarding

May also be shown as 4000005a00000000 or 0x4000005a00000000

**Severity:** Info

**Alert Category:** none

**Serviceable:** No

**CIM Information:** **Prefix:** IMM and **ID:** 0090

**SNMP Trap ID:**

**Automatically notify Support:** No

**User response:** Information only; no action is required.

---

**4000005b-00000000 Secure Web services (HTTPS) [arg1] by user [arg2].**

**Explanation:** A user enables or disables Secure web services

May also be shown as 4000005b00000000 or 0x4000005b00000000

**Severity:** Info

**Alert Category:** none

**Serviceable:** No

**CIM Information:** **Prefix:** IMM and **ID:** 0091

**SNMP Trap ID:**

**Automatically notify Support:** No

**User response:** Information only; no action is required.

---

**4000005c-00000000 Secure CIM/XML(HTTPS) [arg1] by user [arg2].**

**Explanation:** A user enables or disables Secure CIM/XML services

May also be shown as 4000005c00000000 or 0x4000005c00000000

**Severity:** Info

**Alert Category:** none

**Serviceable:** No

**CIM Information:** **Prefix:** IMM and **ID:** 0092

**SNMP Trap ID:**

**Automatically notify Support:** No

**User response:** Information only; no action is required.

**4000005d-00000000 Secure LDAP [arg1] by user [arg2].**

**Explanation:** A user enables or disables Secure LDAP services

May also be shown as 4000005d00000000 or 0x4000005d00000000

**Severity:** Info

**Alert Category:** none

**Serviceable:** No

**CIM Information:** **Prefix:** IMM and **ID:** 0093

**SNMP Trap ID:**

**Automatically notify Support:** No

**User response:** Information only; no action is required.

---

**4000005e-00000000 SSH [arg1] by user [arg2].**

**Explanation:** A user enables or disables SSH services

May also be shown as 4000005e00000000 or 0x4000005e00000000

**Severity:** Info

**Alert Category:** none

**Serviceable:** No

**CIM Information:** **Prefix:** IMM and **ID:** 0094

**SNMP Trap ID:**

**Automatically notify Support:** No

**User response:** Information only; no action is required.

---

**4000005f-00000000 Server timeouts set by user [arg1]: EnableOSWatchdog=[arg2], OSWatchdogTimout=[arg3], EnableLoaderWatchdog=[arg4], LoaderTimeout=[arg5].**

**Explanation:** A user configures Server Timeouts

May also be shown as 4000005f00000000 or 0x4000005f00000000

**Severity:** Info

**Alert Category:** none

**Serviceable:** No

**CIM Information:** **Prefix:** IMM and **ID:** 0095

**SNMP Trap ID:**

**Automatically notify Support:** No

**User response:** Information only; no action is required.

**40000060-00000000 License key for [arg1] added by user [arg2].**

**Explanation:** A user installs License Key

May also be shown as 4000006000000000 or 0x4000006000000000

**Severity:** Info

**Alert Category:** none

**Serviceable:** No

**CIM Information:** **Prefix:** IMM and **ID:** 0096

**SNMP Trap ID:**

**Automatically notify Support:** No

**User response:** Information only; no action is required.

---

**40000061-00000000 License key for [arg1] removed by user [arg2].**

**Explanation:** A user removes a License Key

May also be shown as 4000006100000000 or 0x4000006100000000

**Severity:** Info

**Alert Category:** none

**Serviceable:** No

**CIM Information:** **Prefix:** IMM and **ID:** 0097

**SNMP Trap ID:**

**Automatically notify Support:** No

**User response:** Information only; no action is required.

---

**40000062-00000000 Global Login General Settings set by user [arg1]: AuthenticationMethod=[arg2], LockoutPeriod=[arg3], SessionTimeout=[arg4].**

**Explanation:** A user changes the Global Login General Settings

May also be shown as 4000006200000000 or 0x4000006200000000

**Severity:** Info

**Alert Category:** none

**Serviceable:** No

**CIM Information:** **Prefix:** IMM and **ID:** 0098

**SNMP Trap ID:**

**Automatically notify Support:** No

**User response:** Information only; no action is required.

**40000063-00000000 Global Login Account Security set by user [arg1]: PasswordRequired=[arg2], PasswordExpirationPeriod=[arg3], MinimumPasswordReuseCycle=[arg4], MinimumPasswordLength=[arg5], MinimumPasswordChangeInterval=[arg6], MaxmumLoginFailures=[arg7], LockoutAfterMaxFailures=[arg8], MinimumDifferentCharacters=[arg9], DefaultIDExpired=[arg10], ChangePasswordFirstAccess=[arg11].**

**Explanation:** A user changes the Global Login Account Security Settings to Legacy

May also be shown as 4000006300000000 or 0x4000006300000000

**Severity:** Info

**Alert Category:** none

**Serviceable:** No

**CIM Information:** **Prefix:** IMM and **ID:** 0099

**SNMP Trap ID:**

**Automatically notify Support:** No

**User response:** Information only; no action is required.

---

**40000064-00000000 User [arg1] created.**

**Explanation:** A user account was created

May also be shown as 4000006400000000 or 0x4000006400000000

**Severity:** Info

**Alert Category:** none

**Serviceable:** No

**CIM Information:** **Prefix:** IMM and **ID:** 0100

**SNMP Trap ID:**

**Automatically notify Support:** No

**User response:** Information only; no action is required.

---

**40000065-00000000 User [arg1] removed.**

**Explanation:** A user account was deleted

May also be shown as 4000006500000000 or 0x4000006500000000

**Severity:** Info

**Alert Category:** none

**Serviceable:** No

**CIM Information:** **Prefix:** IMM and **ID:** 0101

**SNMP Trap ID:**

**Automatically notify Support:** No

**User response:** Information only; no action is required.

**40000066-00000000 User [arg1] password modified.**

**Explanation:** A user account was changed

May also be shown as 4000006600000000 or 0x4000006600000000

**Severity:** Info

**Alert Category:** none

**Serviceable:** No

**CIM Information:** **Prefix:** IMM and **ID:** 0102

**SNMP Trap ID:**

**Automatically notify Support:** No

**User response:** Information only; no action is required.

---

**40000067-00000000 User [arg1] role set to [arg2].**

**Explanation:** A user account role assigned

May also be shown as 4000006700000000 or 0x4000006700000000

**Severity:** Info

**Alert Category:** none

**Serviceable:** No

**CIM Information:** **Prefix:** IMM and **ID:** 0103

**SNMP Trap ID:**

**Automatically notify Support:** No

**User response:** Information only; no action is required.

---

**40000068-00000000 User [arg1] custom privileges set: [arg2].**

**Explanation:** User account priveleges assigned

May also be shown as 4000006800000000 or 0x4000006800000000

**Severity:** Info

**Alert Category:** none

**Serviceable:** No

**CIM Information:** **Prefix:** IMM and **ID:** 0104

**SNMP Trap ID:**

**Automatically notify Support:** No

**User response:** Information only; no action is required.

**40000069-00000000 User [arg1] for SNMPv3 set: AuthenticationProtocol=[arg2], PrivacyProtocol=[arg3], AccessType=[arg4], HostforTraps=[arg5].**

**Explanation:** User account SNMPv3 settings changed

May also be shown as 4000006900000000 or 0x4000006900000000

**Severity:** Info

**Alert Category:** none

**Serviceable:** No

**CIM Information:** **Prefix:** IMM and **ID:** 0105

**SNMP Trap ID:**

**Automatically notify Support:** No

**User response:** Information only; no action is required.

---

**4000006a-00000000 SSH Client key added for user [arg1].**

**Explanation:** User locally defined an SSH Client key

May also be shown as 4000006a00000000 or 0x4000006a00000000

**Severity:** Info

**Alert Category:** none

**Serviceable:** No

**CIM Information:** **Prefix:** IMM and **ID:** 0106

**SNMP Trap ID:**

**Automatically notify Support:** No

**User response:** Information only; no action is required.

---

**4000006b-00000000 SSH Client key imported for user [arg1] from [arg2].**

**Explanation:** User imported an SSH Client key

May also be shown as 4000006b00000000 or 0x4000006b00000000

**Severity:** Info

**Alert Category:** none

**Serviceable:** No

**CIM Information:** **Prefix:** IMM and **ID:** 0107

**SNMP Trap ID:**

**Automatically notify Support:** No

**User response:** Information only; no action is required.

**4000006c-00000000 SSH Client key removed from user [arg1].**

**Explanation:** User removed an SSH Client key

May also be shown as 4000006c00000000 or 0x4000006c00000000

**Severity:** Info

**Alert Category:** none

**Serviceable:** No

**CIM Information:** **Prefix:** IMM and **ID:** 0108

**SNMP Trap ID:**

**Automatically notify Support:** No

**User response:** Information only; no action is required.

---

**4000006d-00000000 Management Controller [arg1]: Configuration saved to a file by user [arg2].**

**Explanation:** A user saves a Management Controller configuration to a file.

May also be shown as 4000006d00000000 or 0x4000006d00000000

**Severity:** Info

**Alert Category:** none

**Serviceable:** No

**CIM Information:** **Prefix:** IMM and **ID:** 0109

**SNMP Trap ID:**

**Automatically notify Support:** No

**User response:** Information only; no action is required.

---

**4000006e-00000000 Alert Configuration Global Event Notification set by user [arg1]: RetryLimit=[arg2], RetryInterval=[arg3], EntryInterval=[arg4].**

**Explanation:** A user changes the Global Event Notification settings.

May also be shown as 4000006e00000000 or 0x4000006e00000000

**Severity:** Info

**Alert Category:** none

**Serviceable:** No

**CIM Information:** **Prefix:** IMM and **ID:** 0110

**SNMP Trap ID:**

**Automatically notify Support:** No

**User response:** Information only; no action is required.

**4000006f-00000000 Alert Recipient Number [arg1] updated: Name=[arg2], DeliveryMethod=[arg3], Address=[arg4], IncludeLog=[arg5], Enabled=[arg6], EnabledAlerts=[arg7], AllowedFilters=[arg8].**

**Explanation:** A user adds or updates an Alert Recipient

May also be shown as 4000006f00000000 or 0x4000006f00000000

**Severity:** Info

**Alert Category:** none

**Serviceable:** No

**CIM Information:** **Prefix:** IMM and **ID:** 0111

**SNMP Trap ID:**

**Automatically notify Support:** No

**User response:** Information only; no action is required.

---

**40000070-00000000 SNMP Traps enabled by user [arg1]: EnabledAlerts=[arg2], AllowedFilters=[arg3] .**

**Explanation:** A user enabled the SNMP Traps configuration

May also be shown as 4000007000000000 or 0x4000007000000000

**Severity:** Info

**Alert Category:** none

**Serviceable:** No

**CIM Information:** **Prefix:** IMM and **ID:** 0112

**SNMP Trap ID:**

**Automatically notify Support:** No

**User response:** Information only; no action is required.

---

**40000071-00000000 The power cap value changed from [arg1] watts to [arg2] watts by user [arg3].**

**Explanation:** Power Cap values changed by user

May also be shown as 4000007100000000 or 0x4000007100000000

**Severity:** Info

**Alert Category:** none

**Serviceable:** No

**CIM Information:** **Prefix:** IMM and **ID:** 0113

**SNMP Trap ID:**

**Automatically notify Support:** No

**User response:** Information only; no action is required.

**40000072-00000000 The minimum power cap value changed from [arg1] watts to [arg2] watts.**

**Explanation:** Minimum Power Cap value changed

May also be shown as 4000007200000000 or 0x4000007200000000

**Severity:** Info

**Alert Category:** none

**Serviceable:** No

**CIM Information:** **Prefix:** IMM and **ID:** 0114

**SNMP Trap ID:**

**Automatically notify Support:** No

**User response:** Information only; no action is required.

---

**40000073-00000000 The maximum power cap value changed from [arg1] watts to [arg2] watts.**

**Explanation:** Maximum Power Cap value changed

May also be shown as 4000007300000000 or 0x4000007300000000

**Severity:** Info

**Alert Category:** none

**Serviceable:** No

**CIM Information:** **Prefix:** IMM and **ID:** 0115

**SNMP Trap ID:**

**Automatically notify Support:** No

**User response:** Information only; no action is required.

---

**40000074-00000000 The soft minimum power cap value changed from [arg1] watts to [arg2] watts.**

**Explanation:** Soft Minimum Power Cap value changed

May also be shown as 4000007400000000 or 0x4000007400000000

**Severity:** Info

**Alert Category:** none

**Serviceable:** No

**CIM Information:** **Prefix:** IMM and **ID:** 0116

**SNMP Trap ID:**

**Automatically notify Support:** No

**User response:** Information only; no action is required.

**40000075-00000000 The measured power value exceeded the power cap value.**

**Explanation:** Power exceeded cap

May also be shown as 4000007500000000 or 0x4000007500000000

**Severity:** Warning

**Alert Category:** Warning - Power

**Serviceable:** No

**CIM Information:** **Prefix:** IMM and **ID:** 0117

**SNMP Trap ID:** 164

**Automatically notify Support:** No

**User response:** Information only; no action is required.

---

**40000076-00000000 The new minimum power cap value exceeded the power cap value.**

**Explanation:** Minimum Power Cap exceeds Power Cap

May also be shown as 4000007600000000 or 0x4000007600000000

**Severity:** Warning

**Alert Category:** Warning - Power

**Serviceable:** No

**CIM Information:** **Prefix:** IMM and **ID:** 0118

**SNMP Trap ID:** 164

**Automatically notify Support:** No

**User response:** Information only; no action is required.

---

**40000077-00000000 Power capping was activated by user [arg1].**

**Explanation:** Power capping activated by user

May also be shown as 4000007700000000 or 0x4000007700000000

**Severity:** Info

**Alert Category:** none

**Serviceable:** No

**CIM Information:** **Prefix:** IMM and **ID:** 0119

**SNMP Trap ID:**

**Automatically notify Support:** No

**User response:** Information only; no action is required.

**40000078-00000000 Power capping was deactivated by user [arg1].**

**Explanation:** Power capping deactivated by user

May also be shown as 4000007800000000 or 0x4000007800000000

**Severity:** Info

**Alert Category:** none

**Serviceable:** No

**CIM Information:** **Prefix:** IMM and **ID:** 0120

**SNMP Trap ID:**

**Automatically notify Support:** No

**User response:** Information only; no action is required.

---

**40000079-00000000 Static Power Savings mode has been turned on by user [arg1].**

**Explanation:** Static Power Savings mode turned on by user

May also be shown as 4000007900000000 or 0x4000007900000000

**Severity:** Info

**Alert Category:** none

**Serviceable:** No

**CIM Information:** **Prefix:** IMM and **ID:** 0121

**SNMP Trap ID:**

**Automatically notify Support:** No

**User response:** Information only; no action is required.

---

**4000007a-00000000 Static Power Savings mode has been turned off by user [arg1].**

**Explanation:** Static Power Savings mode turned off by user

May also be shown as 4000007a00000000 or 0x4000007a00000000

**Severity:** Info

**Alert Category:** none

**Serviceable:** No

**CIM Information:** **Prefix:** IMM and **ID:** 0122

**SNMP Trap ID:**

**Automatically notify Support:** No

**User response:** Information only; no action is required.

**4000007b-00000000 Dynamic Power Savings mode has been turned on by user [arg1].**

**Explanation:** Dynamic Power Savings mode turned on by user

May also be shown as 4000007b00000000 or 0x4000007b00000000

**Severity:** Info

**Alert Category:** none

**Serviceable:** No

**CIM Information:** **Prefix:** IMM and **ID:** 0123

**SNMP Trap ID:**

**Automatically notify Support:** No

**User response:** Information only; no action is required.

---

**4000007c-00000000 Dynamic Power Savings mode has been turned off by user [arg1].**

**Explanation:** Dynamic Power Savings mode turned off by user

May also be shown as 4000007c00000000 or 0x4000007c00000000

**Severity:** Info

**Alert Category:** none

**Serviceable:** No

**CIM Information:** **Prefix:** IMM and **ID:** 0124

**SNMP Trap ID:**

**Automatically notify Support:** No

**User response:** Information only; no action is required.

---

**4000007d-00000000 Power cap and external throttling occurred.**

**Explanation:** Power cap and external throttling occurred

May also be shown as 4000007d00000000 or 0x4000007d00000000

**Severity:** Info

**Alert Category:** none

**Serviceable:** No

**CIM Information:** **Prefix:** IMM and **ID:** 0125

**SNMP Trap ID:**

**Automatically notify Support:** No

**User response:** Information only; no action is required.

**4000007e-00000000 External throttling occurred .**

**Explanation:** External throttling occurred

May also be shown as 4000007e00000000 or 0x4000007e00000000

**Severity:** Info

**Alert Category:** none

**Serviceable:** No

**CIM Information:** **Prefix:** IMM and **ID:** 0126

**SNMP Trap ID:**

**Automatically notify Support:** No

**User response:** Information only; no action is required.

---

**4000007f-00000000 Power cap throttling occurred.**

**Explanation:** Power cap throttling occurrred

May also be shown as 4000007f00000000 or 0x4000007f00000000

**Severity:** Info

**Alert Category:** none

**Serviceable:** No

**CIM Information:** **Prefix:** IMM and **ID:** 0127

**SNMP Trap ID:**

**Automatically notify Support:** No

**User response:** Information only; no action is required.

---

**40000080-00000000 Remote Control session started by user [arg1] in [arg2] mode.**

**Explanation:** Remote Control session started

May also be shown as 4000008000000000 or 0x4000008000000000

**Severity:** Info

**Alert Category:** none

**Serviceable:** No

**CIM Information:** **Prefix:** IMM and **ID:** 0128

**SNMP Trap ID:**

**Automatically notify Support:** No

**User response:** Information only; no action is required.

**40000081-00000000 PXE boot requested by user [arg1].**

**Explanation:** PXE boot requested

May also be shown as 4000008100000000 or 0x4000008100000000

**Severity:** Info

**Alert Category:** none

**Serviceable:** No

**CIM Information:** **Prefix:** IMM and **ID:** 0129

**SNMP Trap ID:**

**Automatically notify Support:** No

**User response:** Information only; no action is required.

---

**40000082-00000000 The measured power value has returned below the power cap value.**

**Explanation:** Power exceeded cap recovered

May also be shown as 4000008200000000 or 0x4000008200000000

**Severity:** Info

**Alert Category:** Warning - Power

**Serviceable:** No

**CIM Information:** **Prefix:** IMM and **ID:** 0130

**SNMP Trap ID:** 164

**Automatically notify Support:** No

**User response:** Information only; no action is required.

---

**40000083-00000000 The new minimum power cap value has returned below the power cap value.**

**Explanation:** Minimum Power Cap exceeds Power Cap recovered

May also be shown as 4000008300000000 or 0x4000008300000000

**Severity:** Info

**Alert Category:** Warning - Power

**Serviceable:** No

**CIM Information:** **Prefix:** IMM and **ID:** 0131

**SNMP Trap ID:** 164

**Automatically notify Support:** No

**User response:** Information only; no action is required.

**40000084-00000000 IMM firmware mismatch between nodes [arg1] and [arg2]. Please attempt to flash the IMM firmware to the same level on all nodes.**

**Explanation:** A mismatch of IMM firmware has been detected between nodes

May also be shown as 4000008400000000 or 0x4000008400000000

**Severity:** Error

**Alert Category:** System - Other

**Serviceable:** No

**CIM Information:** **Prefix:** IMM and **ID:** 0132

**SNMP Trap ID:** 22

**Automatically notify Support:** No

**User response:** Attempt to flash the IMM firmware to the same level on all nodes.

---

**40000085-00000000 FPGA firmware mismatch between nodes [arg1] and [arg2]. Please attempt to flash the FPGA firmware to the same level on all nodes.**

**Explanation:** A mismatch of FPGA firmware has been detected between nodes

May also be shown as 4000008500000000 or 0x4000008500000000

**Severity:** Error

**Alert Category:** System - Other

**Serviceable:** No

**CIM Information:** **Prefix:** IMM and **ID:** 0133

**SNMP Trap ID:** 22

**Automatically notify Support:** No

**User response:** Attempt to flash the FPGA firmware to the same level on all nodes.

---

**40000086-00000000 Test Call Home Generated by user [arg1].**

**Explanation:** Test Call Home generated by user.

May also be shown as 4000008600000000 or 0x4000008600000000

**Severity:** Info

**Alert Category:** none

**Serviceable:** No

**CIM Information:** **Prefix:** IMM and **ID:** 0134

**SNMP Trap ID:**

**Automatically notify Support:** Yes

**User response:** Information only; no action is required.

**40000087-00000000 Manual Call Home by user [arg1]: [arg2].**

**Explanation:** Manual Call Home by user.

May also be shown as 4000008700000000 or 0x4000008700000000

**Severity:** Info

**Alert Category:** none

**Serviceable:** No

**CIM Information:** **Prefix:** IMM and **ID:** 0135

**SNMP Trap ID:**

**Automatically notify Support:** Yes

**User response:** IBM Support will address the problem.

---

**40000088-00000000 Management Controller [arg1]: Configuration restoration from a file by user [arg2] completed.**

**Explanation:** This message is for the use case where a user restores a Management Controller configuration from a file and it completes.

May also be shown as 4000008800000000 or 0x4000008800000000

**Severity:** Info

**Alert Category:** none

**Serviceable:** No

**CIM Information:** **Prefix:** IMM and **ID:** 0136

**SNMP Trap ID:**

**Automatically notify Support:** No

**User response:** Information only; no action is required.

---

**40000089-00000000 Management Controller [arg1]: Configuration restoration from a file by user [arg2] failed to complete.**

**Explanation:** This message is for the use case where a user restores a Management Controller configuration from a file and the restoration fails to complete.

May also be shown as 4000008900000000 or 0x4000008900000000

**Severity:** Error

**Alert Category:** System - Other

**Serviceable:** No

**CIM Information:** **Prefix:** IMM and **ID:** 0137

**SNMP Trap ID:** 22

**Automatically notify Support:** No

**User response:**

1. Turn off the server and disconnect it from the power source. You must disconnect the server from ac power to reset the IMM.
2. After 45 seconds, reconnect the server to the power source and turn on the server.
3. Retry the operation.

**4000008a-00000000 Management Controller [arg1]: Configuration restoration from a file by user [arg2] failed to start.**

**Explanation:** This message is for the use case where a user restores a Management Controller configuration from a file and the restoration fails to start.

May also be shown as 4000008a00000000 or 0x4000008a00000000

**Severity:** Error

**Alert Category:** System - Other

**Serviceable:** No

**CIM Information:** **Prefix:** IMM and **ID:** 0138

**SNMP Trap ID:** 22

**Automatically notify Support:** No

**User response:**

1. Turn off the server and disconnect it from the power source. You must disconnect the server from ac power to reset the IMM.
2. After 45 seconds, reconnect the server to the power source and turn on the server.
3. Retry the operation.

---

**4000008b-00000000 One or more of the Storage Management IP addresses has changed.**

**Explanation:** This message is for the use case where an IP address for the Storage Management has changed

May also be shown as 4000008b00000000 or 0x4000008b00000000

**Severity:** Info

**Alert Category:** System - IMM Network event

**Serviceable:** No

**CIM Information:** **Prefix:** IMM and **ID:** 0139

**SNMP Trap ID:** 37

**Automatically notify Support:** No

**User response:** Information only; no action is required.

---

**80010002-0701ffff Numeric sensor [NumericSensorElementName] going low (lower non-critical) has asserted. (CMOS Battery)**

**Explanation:** This message is for the use case when an implementation has detected a Lower Non-critical sensor going low has asserted.

May also be shown as 800100020701ffff or 0x800100020701ffff

**Severity:** Warning

**Alert Category:** Warning - Voltage

**Serviceable:** Yes

**CIM Information:** **Prefix:** PLAT and **ID:** 0476

**SNMP Trap ID:** 13

**Automatically notify Support:** No

**User response:** Replace the system battery.

**80010202-0701ffff Numeric sensor [NumericSensorElementName] going low (lower critical) has asserted. (CMOS Battery)**

**Explanation:** This message is for the use case when an implementation has detected a Lower Critical sensor going low has asserted.

May also be shown as 800102020701ffff or 0x800102020701ffff

**Severity:** Error

**Alert Category:** Critical - Voltage

**Serviceable:** Yes

**CIM Information:** **Prefix:** PLAT and **ID:** 0480

**SNMP Trap ID:** 1

**Automatically notify Support:** Yes

**User response:** If the specified sensor is CMOS battery, replace the system battery. If the specified sensor is Planar 3.3V or Planar 5V, (trained technician only) replace the system board. If the specified sensor is Planar 12V, complete the following steps until the problem is solved:

1. Check power supply n LED.
2. Remove the failing power supply.
3. Follow actions in "Power Problems and Solving Power Problems".
4. (Trained technician only) Replace the system board. (n = power supply number)

**80010204-1d01ffff Numeric sensor [NumericSensorElementName] going low (lower critical) has asserted. (Fan 1A/1B Tach)**

**Explanation:** This message is for the use case when an implementation has detected a Lower Critical sensor going low has asserted.

May also be shown as 800102041d01ffff or 0x800102041d01ffff

**Severity:** Error

**Alert Category:** Critical - Fan Failure

**Serviceable:** Yes

**CIM Information:** **Prefix:** PLAT and **ID:** 0480

**SNMP Trap ID:** 11

**Automatically notify Support:** No

**User response:**

1. Reseat the failing fan n, which is indicated by a lit LED near the fan connector on the system board.
2. Replace the failing fan. (n = fan number)

**80010204-1d02ffff Numeric sensor [NumericSensorElementName] going low (lower critical) has asserted. (Fan 2A/2B Tach)**

**Explanation:** This message is for the use case when an implementation has detected a Lower Critical sensor going low has asserted.

May also be shown as 800102041d02ffff or 0x800102041d02ffff

**Severity:** Error

**Alert Category:** Critical - Fan Failure

**Serviceable:** Yes

**CIM Information:** **Prefix:** PLAT and **ID:** 0480

**SNMP Trap ID:** 11

**Automatically notify Support:** No

**User response:**

1. Reseat the failing fan n, which is indicated by a lit LED near the fan connector on the system board.
2. Replace the failing fan. (n = fan number)

**80010204-1d03ffff Numeric sensor [NumericSensorElementName] going low (lower critical) has asserted. (Fan 3A/3B Tach)**

**Explanation:** This message is for the use case when an implementation has detected a Lower Critical sensor going low has asserted.

May also be shown as 800102041d03ffff or 0x800102041d03ffff

**Severity:** Error

**Alert Category:** Critical - Fan Failure

**Serviceable:** Yes

**CIM Information:** **Prefix:** PLAT and **ID:** 0480

**SNMP Trap ID:** 11

**Automatically notify Support:** No

**User response:**

1. Reseat the failing fan n, which is indicated by a lit LED near the fan connector on the system board.
2. Replace the failing fan. (n = fan number)

**80010204-1d04ffff Numeric sensor [NumericSensorElementName] going low (lower critical) has asserted. (Fan 4A/4B Tach)**

**Explanation:** This message is for the use case when an implementation has detected a Lower Critical sensor going low has asserted.

May also be shown as 800102041d04ffff or 0x800102041d04ffff

**Severity:** Error

**Alert Category:** Critical - Fan Failure

**Serviceable:** Yes

**CIM Information:** **Prefix:** PLAT and **ID:** 0480

**SNMP Trap ID:** 11

**Automatically notify Support:** No

**User response:**

1. Reseat the failing fan n, which is indicated by a lit LED near the fan connector on the system board.

2. Replace the failing fan. (n = fan number)

---

**80010204-1d05ffff Numeric sensor [NumericSensorElementName] going low (lower critical) has asserted. (Fan 5A/5B Tach)**

**Explanation:** This message is for the use case when an implementation has detected a Lower Critical sensor going low has asserted.

May also be shown as 800102041d05ffff or 0x800102041d05ffff

**Severity:** Error

**Alert Category:** Critical - Fan Failure

**Serviceable:** Yes

**CIM Information:** **Prefix:** PLAT and **ID:** 0480

**SNMP Trap ID:** 11

**Automatically notify Support:** No

**User response:**

1. Reseat the failing fan n, which is indicated by a lit LED near the fan connector on the system board.
2. Replace the failing fan. (n = fan number)

---

**80010204-1d06ffff Numeric sensor [NumericSensorElementName] going low (lower critical) has asserted. (Fan 6A/6B Tach)**

**Explanation:** This message is for the use case when an implementation has detected a Lower Critical sensor going low has asserted.

May also be shown as 800102041d06ffff or 0x800102041d06ffff

**Severity:** Error

**Alert Category:** Critical - Fan Failure

**Serviceable:** Yes

**CIM Information:** **Prefix:** PLAT and **ID:** 0480

**SNMP Trap ID:** 11

**Automatically notify Support:** No

**User response:**

1. Reseat the failing fan n, which is indicated by a lit LED near the fan connector on the system board.
2. Replace the failing fan. (n = fan number)

**80010204-1d07ffff Numeric sensor [NumericSensorElementName] going low (lower critical) has asserted. (Fan Riser1A Tach)**

**Explanation:** This message is for the use case when an implementation has detected a Lower Critical sensor going low has asserted.

May also be shown as 800102041d07ffff or 0x800102041d07ffff

**Severity:** Error

**Alert Category:** Critical - Fan Failure

**Serviceable:** Yes

**CIM Information:** **Prefix:** PLAT and **ID:** 0480

**SNMP Trap ID:** 11

**Automatically notify Support:** No

**User response:**

1. Reseat rear hdd cage riser n.
2. Remove the following component and identify the problem. a. HDD drive b. HDD cable c. RAID card d. cage riser n
3. Replace rear hdd cage riser n (n = riser number).

**80010204-1d08ffff Numeric sensor [NumericSensorElementName] going low (lower critical) has asserted. (Fan Riser1B Tach)**

**Explanation:** This message is for the use case when an implementation has detected a Lower Critical sensor going low has asserted.

May also be shown as 800102041d08ffff or 0x800102041d08ffff

**Severity:** Error

**Alert Category:** Critical - Fan Failure

**Serviceable:** Yes

**CIM Information:** **Prefix:** PLAT and **ID:** 0480

**SNMP Trap ID:** 11

**Automatically notify Support:** No

**User response:**

1. Reseat rear hdd cage riser n.
2. Remove the following component and identify the problem. a. HDD drive b. HDD cable c. RAID card d. cage riser n
3. Replace rear hdd cage riser n (n = riser number).

**80010204-1d09ffff Numeric sensor [NumericSensorElementName] going low (lower critical) has asserted. (Fan Riser2A Tach)**

**Explanation:** This message is for the use case when an implementation has detected a Lower Critical sensor going low has asserted.

May also be shown as 800102041d09ffff or 0x800102041d09ffff

**Severity:** Error

**Alert Category:** Critical - Fan Failure

**Serviceable:** Yes

**CIM Information:** **Prefix:** PLAT and **ID:** 0480

**SNMP Trap ID:** 11

**Automatically notify Support:** No

**User response:**

1. Reseat rear hdd cage riser n.
2. Remove the following component and identify the problem. a. HDD drive b. HDD cable c. RAID card d. cage riser n
3. Replace rear hdd cage riser n (n = riser number).

**80010204-1d0affff Numeric sensor [NumericSensorElementName] going low (lower critical) has asserted. (Fan Riser2B Tach)**

**Explanation:** This message is for the use case when an implementation has detected a Lower Critical sensor going low has asserted.

May also be shown as 800102041d0affff or 0x800102041d0affff

**Severity:** Error

**Alert Category:** Critical - Fan Failure

**Serviceable:** Yes

**CIM Information:** **Prefix:** PLAT and **ID:** 0480

**SNMP Trap ID:** 11

**Automatically notify Support:** No

**User response:**

1. Reseat rear hdd cage riser n.
2. Remove the following component and identify the problem. a. HDD drive b. HDD cable c. RAID card d. cage riser n
3. Replace rear hdd cage riser n (n = riser number).

**80010701-0701ffff Numeric sensor [NumericSensorElementName] going high (upper non-critical) has asserted. (RS1 RR Amb Temp)**

**Explanation:** This message is for the use case when an implementation has detected an Upper Non-critical sensor going high has asserted.

May also be shown as 800107010701ffff or 0x800107010701ffff

**Severity:** Warning

**Alert Category:** Warning - Temperature

**Serviceable:** Yes

**CIM Information:** **Prefix:** PLAT and **ID:** 0490

**SNMP Trap ID:** 12

**Automatically notify Support:** No

**User response:**

1. Make sure that the fans are operating, that there are no obstructions to the airflow (front and rear of the server), that the air baffle is in place and correctly installed, and that the server cover is installed and completely closed.
2. Check the ambient temperature. You must be operating within the specifications (see Server Features and specifications for more information).
3. (Trained technician only) Replace system board.

**80010701-0702ffff Numeric sensor [NumericSensorElementName] going high (upper non-critical) has asserted. (RS2 RR Amb Temp)**

**Explanation:** This message is for the use case when an implementation has detected an Upper Non-critical sensor going high has asserted.

May also be shown as 800107010702ffff or 0x800107010702ffff

**Severity:** Warning

**Alert Category:** Warning - Temperature

**Serviceable:** Yes

**CIM Information:** **Prefix:** PLAT and **ID:** 0490

**SNMP Trap ID:** 12

**Automatically notify Support:** No

**User response:**

1. Make sure that the fans are operating, that there are no obstructions to the airflow (front and rear of the server), that the air baffle is in place and correctly installed, and that the server cover is installed and completely closed.
2. Check the ambient temperature. You must be operating within the specifications (see Server Features and specifications for more information).
3. (Trained technician only) Replace system board.

**80010701-0703ffff Numeric sensor [NumericSensorElementName] going high (upper non-critical) has asserted. (MID1 RR Amb Temp)**

**Explanation:** This message is for the use case when an implementation has detected an Upper Non-critical sensor going high has asserted.

May also be shown as 800107010703ffff or 0x800107010703ffff

**Severity:** Warning

**Alert Category:** Warning - Temperature

**Serviceable:** Yes

**CIM Information:** **Prefix:** PLAT and **ID:** 0490

**SNMP Trap ID:** 12

**Automatically notify Support:** No

**User response:**

1. Make sure that the fans are operating, that there are no obstructions to the airflow (front and rear of the server), that the air baffle is in place and correctly installed, and that the server cover is installed and completely closed.
2. Check the ambient temperature. You must be operating within the specifications (see Server Features and specifications for more information).
3. (Trained technician only) Replace system board.

**80010701-0704ffff Numeric sensor [NumericSensorElementName] going high (upper non-critical) has asserted. (MID2 RR Amb Temp)**

**Explanation:** This message is for the use case when an implementation has detected an Upper Non-critical sensor going high has asserted.

May also be shown as 800107010704ffff or 0x800107010704ffff

**Severity:** Warning

**Alert Category:** Warning - Temperature

**Serviceable:** Yes

**CIM Information:** **Prefix:** PLAT and **ID:** 0490

**SNMP Trap ID:** 12

**Automatically notify Support:** No

**User response:**

1. Make sure that the fans are operating, that there are no obstructions to the airflow (front and rear of the server), that the air baffle is in place and correctly installed, and that the server cover is installed and completely closed.
2. Check the ambient temperature. You must be operating within the specifications (see Server Features and specifications for more information).
3. (Trained technician only) Replace system board.

**80010701-0705ffff Numeric sensor [NumericSensorElementName] going high (upper non-critical) has asserted. (RAID RR Amb Temp)**

**Explanation:** This message is for the use case when an implementation has detected an Upper Non-critical sensor going high has asserted.

May also be shown as 800107010705ffff or 0x800107010705ffff

**Severity:** Warning

**Alert Category:** Warning - Temperature

**Serviceable:** Yes

**CIM Information:** **Prefix:** PLAT and **ID:** 0490

**SNMP Trap ID:** 12

**Automatically notify Support:** No

**User response:**

1. Make sure that the fans are operating, that there are no obstructions to the airflow (front and rear of the server), that the air baffle is in place and correctly installed, and that the server cover is installed and completely closed.
2. Check the ambient temperature. You must be operating within the specifications (see Server Features and specifications for more information).
3. (Trained technician only) Replace system board.

**80010701-0706ffff Numeric sensor [NumericSensorElementName] going high (upper non-critical) has asserted. (PSU FR Amb Temp)**

**Explanation:** This message is for the use case when an implementation has detected an Upper Non-critical sensor going high has asserted.

May also be shown as 800107010706ffff or 0x800107010706ffff

**Severity:** Warning

**Alert Category:** Warning - Temperature

**Serviceable:** Yes

**CIM Information:** **Prefix:** PLAT and **ID:** 0490

**SNMP Trap ID:** 12

**Automatically notify Support:** No

**User response:**

1. Make sure that the fans are operating, that there are no obstructions to the airflow (front and rear of the server), that the air baffle is in place and correctly installed, and that the server cover is installed and completely closed.
2. Check the ambient temperature. You must be operating within the specifications (see Server Features and specifications for more information).
3. Replace power supply.

**80010701-0707ffff Numeric sensor [NumericSensorElementName] going high (upper non-critical) has asserted. (Rear BP1 Temp)**

**Explanation:** This message is for the use case when an implementation has detected an Upper Non-critical sensor going high has asserted.

May also be shown as 800107010707ffff or 0x800107010707ffff

**Severity:** Warning

**Alert Category:** Warning - Temperature

**Serviceable:** Yes

**CIM Information:** **Prefix:** PLAT and **ID:** 0490

**SNMP Trap ID:** 12

**Automatically notify Support:** No

**User response:**

1. Make sure that the fans are operating, that there are no obstructions to the airflow (front and rear of the server), that the air baffle is in place and correctly installed, and that the server cover is installed and completely closed.
2. Check the ambient temperature. You must be operating within the specifications (see Server Features and specifications for more information).
3. Check fan cable on rear HDD cable is connected correctly.
4. Check the fans on rear HDD cage are functional.
5. Replace rear HDD drive cage.

**80010701-0708ffff Numeric sensor [NumericSensorElementName] going high (upper non-critical) has asserted. (Rear BP2 Temp)**

**Explanation:** This message is for the use case when an implementation has detected an Upper Non-critical sensor going high has asserted.

May also be shown as 800107010708ffff or 0x800107010708ffff

**Severity:** Warning

**Alert Category:** Warning - Temperature

**Serviceable:** Yes

**CIM Information:** **Prefix:** PLAT and **ID:** 0490

**SNMP Trap ID:** 12

**Automatically notify Support:** No

**User response:**

1. Make sure that the fans are operating, that there are no obstructions to the airflow (front and rear of the server), that the air baffle is in place and correctly installed, and that the server cover is installed and completely closed.
2. Check the ambient temperature. You must be operating within the specifications (see Server Features and specifications for more information).
3. Check fan cable on rear HDD cable is connected correctly.
4. Check the fans on rear HDD cage are functional.
5. Replace rear HDD drive cage.

**80010701-1401ffff Numeric sensor [NumericSensorElementName] going high (upper non-critical) has asserted. (CPU1 VR Temp)**

**Explanation:** This message is for the use case when an implementation has detected an Upper Non-critical sensor going high has asserted.

May also be shown as 800107011401ffff or 0x800107011401ffff

**Severity:** Warning

**Alert Category:** Warning - Temperature

**Serviceable:** Yes

**CIM Information:** **Prefix:** PLAT and **ID:** 0490

**SNMP Trap ID:** 12

**Automatically notify Support:** No

**User response:**

1. Reduce the temperature.
2. Check the server airflow. Make sure that nothing is blocking the air from coming into or preventing the air from exiting the server.

**80010701-1402ffff Numeric sensor [NumericSensorElementName] going high (upper non-critical) has asserted. (CPU2 VR Temp)**

**Explanation:** This message is for the use case when an implementation has detected an Upper Non-critical sensor going high has asserted.

May also be shown as 800107011402ffff or 0x800107011402ffff

**Severity:** Warning

**Alert Category:** Warning - Temperature

**Serviceable:** Yes

**CIM Information:** **Prefix:** PLAT and **ID:** 0490

**SNMP Trap ID:** 12

**Automatically notify Support:** No

**User response:**

1. Reduce the temperature.
2. Check the server airflow. Make sure that nothing is blocking the air from coming into or preventing the air from exiting the server.

**80010701-1403ffff Numeric sensor [NumericSensorElementName] going high (upper non-critical) has asserted. (DIMM AB VR Temp)**

**Explanation:** This message is for the use case when an implementation has detected an Upper Non-critical sensor going high has asserted.

May also be shown as 800107011403ffff or 0x800107011403ffff

**Severity:** Warning

**Alert Category:** Warning - Temperature

**Serviceable:** Yes

**CIM Information:** **Prefix:** PLAT and **ID:** 0490

**SNMP Trap ID:** 12

**Automatically notify Support:** No

**User response:**

1. Reduce the temperature.
2. Check the server airflow. Make sure that nothing is blocking the air from coming into or preventing the air from exiting the server.

**80010701-1404ffff Numeric sensor [NumericSensorElementName] going high (upper non-critical) has asserted. (DIMM CD VR Temp)**

**Explanation:** This message is for the use case when an implementation has detected an Upper Non-critical sensor going high has asserted.

May also be shown as 800107011404ffff or 0x800107011404ffff

**Severity:** Warning

**Alert Category:** Warning - Temperature

**Serviceable:** Yes

**CIM Information:** **Prefix:** PLAT and **ID:** 0490

**SNMP Trap ID:** 12

**Automatically notify Support:** No

**User response:**

1. Reduce the temperature.
2. Check the server airflow. Make sure that nothing is blocking the air from coming into or preventing the air from exiting the server.

**80010701-1405ffff Numeric sensor [NumericSensorElementName] going high (upper non-critical) has asserted. (DIMM EF VR Temp)**

**Explanation:** This message is for the use case when an implementation has detected an Upper Non-critical sensor going high has asserted.

May also be shown as 800107011405ffff or 0x800107011405ffff

**Severity:** Warning

**Alert Category:** Warning - Temperature

**Serviceable:** Yes

**CIM Information:** **Prefix:** PLAT and **ID:** 0490

**SNMP Trap ID:** 12

**Automatically notify Support:** No

**User response:**

1. Reduce the temperature.
2. Check the server airflow. Make sure that nothing is blocking the air from coming into or preventing the air from exiting the server.

**80010701-1406ffff Numeric sensor [NumericSensorElementName] going high (upper non-critical) has asserted. (DIMM GH VR Temp)**

**Explanation:** This message is for the use case when an implementation has detected an Upper Non-critical sensor going high has asserted.

May also be shown as 800107011406ffff or 0x800107011406ffff

**Severity:** Warning

**Alert Category:** Warning - Temperature

**Serviceable:** Yes

**CIM Information:** **Prefix:** PLAT and **ID:** 0490

**SNMP Trap ID:** 12

**Automatically notify Support:** No

**User response:**

1. Make sure that the fans are operating, that there are no obstructions to the airflow (front and rear of the server), that the air baffle is in place and correctly installed, and that the server cover is installed and completely closed.
2. Check the ambient temperature. You must be operating within the specifications (see Server Features and specifications for more information).
3. Make sure that the heat sink for microprocessor n.
4. (Trained technician only) Replace system board.

**80010701-2d01ffff Numeric sensor [NumericSensorElementName] going high (upper non-critical) has asserted. (PCH Temp)**

**Explanation:** This message is for the use case when an implementation has detected an Upper Non-critical sensor going high has asserted.

May also be shown as 800107012d01ffff or 0x800107012d01ffff

**Severity:** Warning

**Alert Category:** Warning - Temperature

**Serviceable:** Yes

**CIM Information:** **Prefix:** PLAT and **ID:** 0490

**SNMP Trap ID:** 12

**Automatically notify Support:** No

**User response:**

1. Make sure that the fans are operating, that there are no obstructions to the airflow (front and rear of the server), that the air baffle is in place and correctly installed, and that the server cover is installed and completely closed.
2. Check the ambient temperature. You must be operating within the specifications (see Server Features and specifications for more information).
3. Make sure that the heat sink for microprocessor n.
4. (Trained technician only) Replace system board.

**80010701-3701ffff Numeric sensor [NumericSensorElementName] going high (upper non-critical) has asserted. (Ambient Temp)**

**Explanation:** This message is for the use case when an implementation has detected an Upper Non-critical sensor going high has asserted.

May also be shown as 800107013701ffff or 0x800107013701ffff

**Severity:** Warning

**Alert Category:** Warning - Temperature

**Serviceable:** Yes

**CIM Information:** **Prefix:** PLAT and **ID:** 0490

**SNMP Trap ID:** 12

**Automatically notify Support:** No

**User response:**

1. Make sure that the fans are operating, that there are no obstructions to the airflow (front and rear of the server), that the air baffle is in place and correctly installed, and that the server cover is installed and completely closed.
2. Check the ambient temperature. You must be operating within the specifications (see Server Features and specifications for more information).
3. Make sure that the heat sink for microprocessor n.
4. (Trained technician only) Replace system board.

**80010901-0701ffff Numeric sensor [NumericSensorElementName] going high (upper critical) has asserted. (RS1 RR Amb Temp)**

**Explanation:** This message is for the use case when an implementation has detected an Upper Critical sensor going high has asserted.

May also be shown as 800109010701ffff or 0x800109010701ffff

**Severity:** Error

**Alert Category:** Critical - Temperature

**Serviceable:** Yes

**CIM Information:** **Prefix:** PLAT and **ID:** 0494

**SNMP Trap ID:** 0

**Automatically notify Support:** No

**User response:**

1. Make sure that the fans are operating, that there are no obstructions to the airflow (front and rear of the server), that the air baffle is in place and correctly installed, and that the server cover is installed and completely closed.
2. Check the ambient temperature. You must be operating within the specifications (see Server Features and specifications for more information).
3. (Trained technician only) Replace system board.

**80010901-0702ffff Numeric sensor [NumericSensorElementName] going high (upper critical) has asserted. (RS2 RR Amb Temp)**

**Explanation:** This message is for the use case when an implementation has detected an Upper Critical sensor going high has asserted.

May also be shown as 800109010702ffff or 0x800109010702ffff

**Severity:** Error

**Alert Category:** Critical - Temperature

**Serviceable:** Yes

**CIM Information:** **Prefix:** PLAT and **ID:** 0494

**SNMP Trap ID:** 0

**Automatically notify Support:** No

**User response:**

1. Make sure that the fans are operating, that there are no obstructions to the airflow (front and rear of the server), that the air baffle is in place and correctly installed, and that the server cover is installed and completely closed.
2. Check the ambient temperature. You must be operating within the specifications (see Server Features and specifications for more information).
3. (Trained technician only) Replace system board.

**80010901-0703ffff Numeric sensor [NumericSensorElementName] going high (upper critical) has asserted. (MID1 RR Amb Temp)**

**Explanation:** This message is for the use case when an implementation has detected an Upper Critical sensor going high has asserted.

May also be shown as 800109010703ffff or 0x800109010703ffff

**Severity:** Error

**Alert Category:** Critical - Temperature

**Serviceable:** Yes

**CIM Information:** **Prefix:** PLAT and **ID:** 0494

**SNMP Trap ID:** 0

**Automatically notify Support:** No

**User response:**

1. Make sure that the fans are operating, that there are no obstructions to the airflow (front and rear of the server), that the air baffle is in place and correctly installed, and that the server cover is installed and completely closed.
2. Check the ambient temperature. You must be operating within the specifications (see Server Features and specifications for more information).
3. (Trained technician only) Replace system board.

**80010901-0704ffff Numeric sensor [NumericSensorElementName] going high (upper critical) has asserted. (MID2 RR Amb Temp)**

**Explanation:** This message is for the use case when an implementation has detected an Upper Critical sensor going high has asserted.

May also be shown as 800109010704ffff or 0x800109010704ffff

**Severity:** Error

**Alert Category:** Critical - Temperature

**Serviceable:** Yes

**CIM Information:** **Prefix:** PLAT and **ID:** 0494

**SNMP Trap ID:** 0

**Automatically notify Support:** No

**User response:**

1. Make sure that the fans are operating, that there are no obstructions to the airflow (front and rear of the server), that the air baffle is in place and correctly installed, and that the server cover is installed and completely closed.
2. Check the ambient temperature. You must be operating within the specifications (see Server Features and specifications for more information).
3. (Trained technician only) Replace system board.

**80010901-0705ffff Numeric sensor [NumericSensorElementName] going high (upper critical) has asserted. (RAID RR Amb Temp)**

**Explanation:** This message is for the use case when an implementation has detected an Upper Critical sensor going high has asserted.

May also be shown as 800109010705ffff or 0x800109010705ffff

**Severity:** Error

**Alert Category:** Critical - Temperature

**Serviceable:** Yes

**CIM Information:** **Prefix:** PLAT and **ID:** 0494

**SNMP Trap ID:** 0

**Automatically notify Support:** No

**User response:**

1. Make sure that the fans are operating, that there are no obstructions to the airflow (front and rear of the server), that the air baffle is in place and correctly installed, and that the server cover is installed and completely closed.
2. Check the ambient temperature. You must be operating within the specifications (see Server Features and specifications for more information).
3. (Trained technician only) Replace system board.

**80010901-0706ffff Numeric sensor [NumericSensorElementName] going high (upper critical) has asserted. (PSU FR Amb Temp)**

**Explanation:** This message is for the use case when an implementation has detected an Upper Critical sensor going high has asserted.

May also be shown as 800109010706ffff or 0x800109010706ffff

**Severity:** Error

**Alert Category:** Critical - Temperature

**Serviceable:** Yes

**CIM Information:** **Prefix:** PLAT and **ID:** 0494

**SNMP Trap ID:** 0

**Automatically notify Support:** No

**User response:**

1. Make sure that the fans are operating, that there are no obstructions to the airflow (front and rear of the server), that the air baffle is in place and correctly installed, and that the server cover is installed and completely closed.
2. Check the ambient temperature. You must be operating within the specifications (see Server Features and specifications for more information).
3. Replace power supply.

**80010901-0707ffff Numeric sensor [NumericSensorElementName] going high (upper critical) has asserted. (Rear BP1 Temp)**

**Explanation:** This message is for the use case when an implementation has detected an Upper Critical sensor going high has asserted.

May also be shown as 800109010707ffff or 0x800109010707ffff

**Severity:** Error

**Alert Category:** Critical - Temperature

**Serviceable:** Yes

**CIM Information:** **Prefix:** PLAT and **ID:** 0494

**SNMP Trap ID:** 0

**Automatically notify Support:** No

**User response:**

1. Make sure that the fans are operating, that there are no obstructions to the airflow (front and rear of the server), that the air baffle is in place and correctly installed, and that the server cover is installed and completely closed.
2. Check the ambient temperature. You must be operating within the specifications (see Server Features and specifications for more information).
3. Check fan cable on rear HDD cable is connected correctly.
4. Check the fans on rear HDD cage are functional.
5. Replace rear HDD drive cage.

**80010901-0708ffff Numeric sensor [NumericSensorElementName] going high (upper critical) has asserted. (Rear BP2 Temp)**

**Explanation:** This message is for the use case when an implementation has detected an Upper Critical sensor going high has asserted.

May also be shown as 800109010708ffff or 0x800109010708ffff

**Severity:** Error

**Alert Category:** Critical - Temperature

**Serviceable:** Yes

**CIM Information:** **Prefix:** PLAT and **ID:** 0494

**SNMP Trap ID:** 0

**Automatically notify Support:** No

**User response:**

1. Make sure that the fans are operating, that there are no obstructions to the airflow (front and rear of the server), that the air baffle is in place and correctly installed, and that the server cover is installed and completely closed.
2. Check the ambient temperature. You must be operating within the specifications (see Server Features and specifications for more information).
3. Check fan cable on rear HDD cable is connected correctly.
4. Check the fans on rear HDD cage are functional.
5. Replace rear HDD drive cage.

**80010901-1401ffff Numeric sensor [NumericSensorElementName] going high (upper critical) has asserted. (CPU1 VR Temp)**

**Explanation:** This message is for the use case when an implementation has detected an Upper Critical sensor going high has asserted.

May also be shown as 800109011401ffff or 0x800109011401ffff

**Severity:** Error

**Alert Category:** Critical - Temperature

**Serviceable:** Yes

**CIM Information:** **Prefix:** PLAT and **ID:** 0494

**SNMP Trap ID:** 0

**Automatically notify Support:** No

**User response:**

1. Reduce the ambient temperature.
2. Ensure the air baffle is installed correctly.
3. Check the server airflow. Make sure that nothing is blocking the air from coming into or preventing the air from exiting the server.

**80010901-1402ffff Numeric sensor [NumericSensorElementName] going high (upper critical) has asserted. (CPU2 VR Temp)**

**Explanation:** This message is for the use case when an implementation has detected an Upper Critical sensor going high has asserted.

May also be shown as 800109011402ffff or 0x800109011402ffff

**Severity:** Error

**Alert Category:** Critical - Temperature

**Serviceable:** Yes

**CIM Information:** **Prefix:** PLAT and **ID:** 0494

**SNMP Trap ID:** 0

**Automatically notify Support:** No

**User response:**

1. Reduce the ambient temperature.
2. Ensure the air baffle is installed correctly.
3. Check the server airflow. Make sure that nothing is blocking the air from coming into or preventing the air from exiting the server.

**80010901-1403ffff Numeric sensor [NumericSensorElementName] going high (upper critical) has asserted. (DIMM AB VR Temp)**

**Explanation:** This message is for the use case when an implementation has detected an Upper Critical sensor going high has asserted.

May also be shown as 800109011403ffff or 0x800109011403ffff

**Severity:** Error

**Alert Category:** Critical - Temperature

**Serviceable:** Yes

**CIM Information:** **Prefix:** PLAT and **ID:** 0494

**SNMP Trap ID:** 0

**Automatically notify Support:** No

**User response:**

1. Reduce the ambient temperature.
2. Ensure the air baffle is installed correctly.
3. Check the server airflow. Make sure that nothing is blocking the air from coming into or preventing the air from exiting the server.

**80010901-1404ffff Numeric sensor [NumericSensorElementName] going high (upper critical) has asserted. (DIMM CD VR Temp)**

**Explanation:** This message is for the use case when an implementation has detected an Upper Critical sensor going high has asserted.

May also be shown as 800109011404ffff or 0x800109011404ffff

**Severity:** Error

**Alert Category:** Critical - Temperature

**Serviceable:** Yes

**CIM Information:** **Prefix:** PLAT and **ID:** 0494

**SNMP Trap ID:** 0

**Automatically notify Support:** No

**User response:**

1. Reduce the ambient temperature.
2. Ensure the air baffle is installed correctly.
3. Check the server airflow. Make sure that nothing is blocking the air from coming into or preventing the air from exiting the server.

**80010901-1405ffff Numeric sensor [NumericSensorElementName] going high (upper critical) has asserted. (DIMM EF VR Temp)**

**Explanation:** This message is for the use case when an implementation has detected an Upper Critical sensor going high has asserted.

May also be shown as 800109011405ffff or 0x800109011405ffff

**Severity:** Error

**Alert Category:** Critical - Temperature

**Serviceable:** Yes

**CIM Information:** **Prefix:** PLAT and **ID:** 0494

**SNMP Trap ID:** 0

**Automatically notify Support:** No

**User response:**

1. Reduce the ambient temperature.
2. Ensure the air baffle is installed correctly.
3. Check the server airflow. Make sure that nothing is blocking the air from coming into or preventing the air from exiting the server.

**80010901-1406ffff Numeric sensor [NumericSensorElementName] going high (upper critical) has asserted. (DIMM GH VR Temp)**

**Explanation:** This message is for the use case when an implementation has detected an Upper Critical sensor going high has asserted.

May also be shown as 800109011406ffff or 0x800109011406ffff

**Severity:** Error

**Alert Category:** Critical - Temperature

**Serviceable:** Yes

**CIM Information:** **Prefix:** PLAT and **ID:** 0494

**SNMP Trap ID:** 0

**Automatically notify Support:** No

**User response:**

1. Make sure that the fans are operating, that there are no obstructions to the airflow (front and rear of the server), that the air baffle is in place and correctly installed, and that the server cover is installed and completely closed.
2. Check the ambient temperature. You must be operating within the specifications (see Server Features and specifications for more information).
3. Make sure that the heat sink for microprocessor n.
4. (Trained technician only) Replace system board.

**80010901-2d01ffff Numeric sensor [NumericSensorElementName] going high (upper critical) has asserted. (PCH Temp)**

**Explanation:** This message is for the use case when an implementation has detected an Upper Critical sensor going high has asserted.

May also be shown as 800109012d01ffff or 0x800109012d01ffff

**Severity:** Error

**Alert Category:** Critical - Temperature

**Serviceable:** Yes

**CIM Information:** **Prefix:** PLAT and **ID:** 0494

**SNMP Trap ID:** 0

**Automatically notify Support:** No

**User response:**

1. Make sure that the fans are operating, that there are no obstructions to the airflow (front and rear of the server), that the air baffle is in place and correctly installed, and that the server cover is installed and completely closed.
2. Check the ambient temperature. You must be operating within the specifications (see Server Features and specifications for more information).
3. Make sure that the heat sink for microprocessor n.
4. (Trained technician only) Replace system board.

**80010901-3701ffff Numeric sensor [NumericSensorElementName] going high (upper critical) has asserted. (Ambient Temp)**

**Explanation:** This message is for the use case when an implementation has detected an Upper Critical sensor going high has asserted.

May also be shown as 800109013701ffff or 0x800109013701ffff

**Severity:** Error

**Alert Category:** Critical - Temperature

**Serviceable:** Yes

**CIM Information:** **Prefix:** PLAT and **ID:** 0494

**SNMP Trap ID:** 0

**Automatically notify Support:** No

**User response:**

1. Make sure that the fans are operating, that there are no obstructions to the airflow (front and rear of the server), that the air baffle is in place and correctly installed, and that the server cover is installed and completely closed.
2. Check the ambient temperature. You must be operating within the specifications (see Server Features and specifications for more information).
3. Make sure that the heat sink for microprocessor n.
4. (Trained technician only) Replace system board.

**80010902-0701ffff Numeric sensor [NumericSensorElementName] going high (upper critical) has asserted. (SysBrd 12V)**

**Explanation:** This message is for the use case when an implementation has detected an Upper Critical sensor going high has asserted.

May also be shown as 800109020701ffff or 0x800109020701ffff

**Severity:** Error

**Alert Category:** Critical - Voltage

**Serviceable:** Yes

**CIM Information:** **Prefix:** PLAT and **ID:** 0494

**SNMP Trap ID:** 1

**Automatically notify Support:** Yes

**User response:** If the specified sensor is Planar 3.3V or Planar 5V, (trained technician only) replace the system board. If the specified sensor is Planar 12V, complete the following steps until the problem is solved:

1. Check power supply n LED.
2. Remove the failing power supply.
3. (Trained technician only) Replace the system board. (n = power supply number)

**80010b01-0701ffff Numeric sensor [NumericSensorElementName] going high (upper non-recoverable) has asserted. (RS1 RR Amb Temp)**

**Explanation:** This message is for the use case when an implementation has detected an Upper Non-recoverable sensor going high has asserted.

May also be shown as 80010b010701ffff or 0x80010b010701ffff

**Severity:** Error

**Alert Category:** Critical - Temperature

**Serviceable:** Yes

**CIM Information:** **Prefix:** PLAT and **ID:** 0498

**SNMP Trap ID:** 0

**Automatically notify Support:** No

**User response:**

1. Make sure that the fans are operating, that there are no obstructions to the airflow (front and rear of the server), that the air baffle is in place and correctly installed, and that the server cover is installed and completely closed.
2. Check the ambient temperature. You must be operating within the specifications (see Server Features and specifications for more information).
3. (Trained technician only) Replace system board.

**80010b01-0702ffff Numeric sensor [NumericSensorElementName] going high (upper non-recoverable) has asserted. (RS2 RR Amb Temp)**

**Explanation:** This message is for the use case when an implementation has detected an Upper Non-recoverable sensor going high has asserted.

May also be shown as 80010b010702ffff or 0x80010b010702ffff

**Severity:** Error

**Alert Category:** Critical - Temperature

**Serviceable:** Yes

**CIM Information:** **Prefix:** PLAT and **ID:** 0498

**SNMP Trap ID:** 0

**Automatically notify Support:** No

**User response:**

1. Make sure that the fans are operating, that there are no obstructions to the airflow (front and rear of the server), that the air baffle is in place and correctly installed, and that the server cover is installed and completely closed.
2. Check the ambient temperature. You must be operating within the specifications (see Server Features and specifications for more information).
3. (Trained technician only) Replace system board.

**80010b01-0703ffff Numeric sensor [NumericSensorElementName] going high (upper non-recoverable) has asserted. (MID1 RR Amb Temp)**

**Explanation:** This message is for the use case when an implementation has detected an Upper Non-recoverable sensor going high has asserted.

May also be shown as 80010b010703ffff or 0x80010b010703ffff

**Severity:** Error

**Alert Category:** Critical - Temperature

**Serviceable:** Yes

**CIM Information:** **Prefix:** PLAT and **ID:** 0498

**SNMP Trap ID:** 0

**Automatically notify Support:** No

**User response:**

1. Make sure that the fans are operating, that there are no obstructions to the airflow (front and rear of the server), that the air baffle is in place and correctly installed, and that the server cover is installed and completely closed.
2. Check the ambient temperature. You must be operating within the specifications (see Server Features and specifications for more information).
3. (Trained technician only) Replace system board.

**80010b01-0704ffff Numeric sensor [NumericSensorElementName] going high (upper non-recoverable) has asserted. (MID2 RR Amb Temp)**

**Explanation:** This message is for the use case when an implementation has detected an Upper Non-recoverable sensor going high has asserted.

May also be shown as 80010b010704ffff or 0x80010b010704ffff

**Severity:** Error

**Alert Category:** Critical - Temperature

**Serviceable:** Yes

**CIM Information:** **Prefix:** PLAT and **ID:** 0498

**SNMP Trap ID:** 0

**Automatically notify Support:** No

**User response:**

1. Make sure that the fans are operating, that there are no obstructions to the airflow (front and rear of the server), that the air baffle is in place and correctly installed, and that the server cover is installed and completely closed.
2. Check the ambient temperature. You must be operating within the specifications (see Server Features and specifications for more information).
3. (Trained technician only) Replace system board.

**80010b01-0705ffff Numeric sensor [NumericSensorElementName] going high (upper non-recoverable) has asserted. (RAID RR Amb Temp)**

**Explanation:** This message is for the use case when an implementation has detected an Upper Non-recoverable sensor going high has asserted.

May also be shown as 80010b010705ffff or 0x80010b010705ffff

**Severity:** Error

**Alert Category:** Critical - Temperature

**Serviceable:** Yes

**CIM Information:** **Prefix:** PLAT and **ID:** 0498

**SNMP Trap ID:** 0

**Automatically notify Support:** No

**User response:**

1. Make sure that there are no obstructions, such as bundled cables, to the airflow from the power-supply fan.
2. Check the ambient temperature.
3. Use the IBM Power Configurator utility to ensure current system power consumption is under limitation. For more information and to download the utility, go to http://www-03.ibm.com/systems/bladecenter/resources/powerconfig.html.
4. Replace power supply n. (n = power supply number).

**80010b01-0706ffff Numeric sensor [NumericSensorElementName] going high (upper non-recoverable) has asserted. (PSU FR Amb Temp)**

**Explanation:** This message is for the use case when an implementation has detected an Upper Non-recoverable sensor going high has asserted.

May also be shown as 80010b010706ffff or 0x80010b010706ffff

**Severity:** Error

**Alert Category:** Critical - Temperature

**Serviceable:** Yes

**CIM Information:** **Prefix:** PLAT and **ID:** 0498

**SNMP Trap ID:** 0

**Automatically notify Support:** No

**User response:**

1. Make sure that the fans are operating, that there are no obstructions to the airflow (front and rear of the server), that the air baffle is in place and correctly installed, and that the server cover is installed and completely closed.
2. Check the ambient temperature. You must be operating within the specifications (see Server Features and specifications for more information).
3. Replace power supply.

**80010b01-0707ffff Numeric sensor [NumericSensorElementName] going high (upper non-recoverable) has asserted. (Rear BP1 Temp)**

**Explanation:** This message is for the use case when an implementation has detected an Upper Non-recoverable sensor going high has asserted.

May also be shown as 80010b010707ffff or 0x80010b010707ffff

**Severity:** Error

**Alert Category:** Critical - Temperature

**Serviceable:** Yes

**CIM Information:** **Prefix:** PLAT and **ID:** 0498

**SNMP Trap ID:** 0

**Automatically notify Support:** No

**User response:**

1. Make sure that the fans are operating, that there are no obstructions to the airflow (front and rear of the server), that the air baffle is in place and correctly installed, and that the server cover is installed and completely closed.
2. Check the ambient temperature. You must be operating within the specifications (see Server Features and specifications for more information).
3. Check fan cable on rear HDD cable is connected correctly.
4. Check the fans on rear HDD cage are functional.
5. Replace rear HDD drive cage.

**80010b01-0708ffff Numeric sensor [NumericSensorElementName] going high (upper non-recoverable) has asserted. (Rear BP2 Temp)**

**Explanation:** This message is for the use case when an implementation has detected an Upper Non-recoverable sensor going high has asserted.

May also be shown as 80010b010708ffff or 0x80010b010708ffff

**Severity:** Error

**Alert Category:** Critical - Temperature

**Serviceable:** Yes

**CIM Information:** **Prefix:** PLAT and **ID:** 0498

**SNMP Trap ID:** 0

**Automatically notify Support:** No

**User response:**

1. Make sure that the fans are operating, that there are no obstructions to the airflow (front and rear of the server), that the air baffle is in place and correctly installed, and that the server cover is installed and completely closed.
2. Check the ambient temperature. You must be operating within the specifications (see Server Features and specifications for more information).
3. Check fan cable on rear HDD cable is connected correctly.
4. Check the fans on rear HDD cage are functional.
5. Replace rear HDD drive cage.

**80010b01-1401ffff Numeric sensor [NumericSensorElementName] going high (upper non-recoverable) has asserted. (CPU1 VR Temp)**

**Explanation:** This message is for the use case when an implementation has detected an Upper Non-recoverable sensor going high has asserted.

May also be shown as 80010b011401ffff or 0x80010b011401ffff

**Severity:** Error

**Alert Category:** Critical - Temperature

**Serviceable:** Yes

**CIM Information:** **Prefix:** PLAT and **ID:** 0498

**SNMP Trap ID:** 0

**Automatically notify Support:** No

**User response:**

1. Make sure that the fans are operating, that there are no obstructions to the airflow (front and rear of the server), that the air baffle is in place and correctly installed, and that the server cover is installed and completely closed.
2. Check the ambient temperature. You must be operating within the specifications (see Server Features and specifications for more information).
3. (Trained technician only) Replace system board.

**80010b01-1402ffff Numeric sensor [NumericSensorElementName] going high (upper non-recoverable) has asserted. (CPU2 VR Temp)**

**Explanation:** This message is for the use case when an implementation has detected an Upper Non-recoverable sensor going high has asserted.

May also be shown as 80010b011402ffff or 0x80010b011402ffff

**Severity:** Error

**Alert Category:** Critical - Temperature

**Serviceable:** Yes

**CIM Information:** **Prefix:** PLAT and **ID:** 0498

**SNMP Trap ID:** 0

**Automatically notify Support:** No

**User response:**

1. Make sure that the fans are operating, that there are no obstructions to the airflow (front and rear of the server), that the air baffle is in place and correctly installed, and that the server cover is installed and completely closed.
2. Check the ambient temperature. You must be operating within the specifications (see Server Features and specifications for more information).
3. (Trained technician only) Replace system board.

**80010b01-1403ffff Numeric sensor [NumericSensorElementName] going high (upper non-recoverable) has asserted. (DIMM AB VR Temp)**

**Explanation:** This message is for the use case when an implementation has detected an Upper Non-recoverable sensor going high has asserted.

May also be shown as 80010b011403ffff or 0x80010b011403ffff

**Severity:** Error

**Alert Category:** Critical - Temperature

**Serviceable:** Yes

**CIM Information:** **Prefix:** PLAT and **ID:** 0498

**SNMP Trap ID:** 0

**Automatically notify Support:** No

**User response:**

1. Make sure that the fans are operating, that there are no obstructions to the airflow (front and rear of the server), that the air baffle is in place and correctly installed, and that the server cover is installed and completely closed.
2. Check the ambient temperature. You must be operating within the specifications (see Server Features and specifications for more information).
3. (Trained technician only) Replace system board.

**80010b01-1404ffff Numeric sensor [NumericSensorElementName] going high (upper non-recoverable) has asserted. (DIMM CD VR Temp)**

**Explanation:** This message is for the use case when an implementation has detected an Upper Non-recoverable sensor going high has asserted.

May also be shown as 80010b011404ffff or 0x80010b011404ffff

**Severity:** Error

**Alert Category:** Critical - Temperature

**Serviceable:** Yes

**CIM Information:** **Prefix:** PLAT and **ID:** 0498

**SNMP Trap ID:** 0

**Automatically notify Support:** No

**User response:**

1. Make sure that the fans are operating, that there are no obstructions to the airflow (front and rear of the server), that the air baffle is in place and correctly installed, and that the server cover is installed and completely closed.
2. Check the ambient temperature. You must be operating within the specifications (see Server Features and specifications for more information).
3. (Trained technician only) Replace system board.

**80010b01-1405ffff Numeric sensor [NumericSensorElementName] going high (upper non-recoverable) has asserted. (DIMM EF VR Temp)**

**Explanation:** This message is for the use case when an implementation has detected an Upper Non-recoverable sensor going high has asserted.

May also be shown as 80010b011405ffff or 0x80010b011405ffff

**Severity:** Error

**Alert Category:** Critical - Temperature

**Serviceable:** Yes

**CIM Information:** **Prefix:** PLAT and **ID:** 0498

**SNMP Trap ID:** 0

**Automatically notify Support:** No

**User response:**

1. Make sure that the fans are operating, that there are no obstructions to the airflow (front and rear of the server), that the air baffle is in place and correctly installed, and that the server cover is installed and completely closed.
2. Check the ambient temperature. You must be operating within the specifications (see Server Features and specifications for more information).
3. (Trained technician only) Replace system board.

**80010b01-1406ffff Numeric sensor [NumericSensorElementName] going high (upper non-recoverable) has asserted. (DIMM GH VR Temp)**

**Explanation:** This message is for the use case when an implementation has detected an Upper Non-recoverable sensor going high has asserted.

May also be shown as 80010b011406ffff or 0x80010b011406ffff

**Severity:** Error

**Alert Category:** Critical - Temperature

**Serviceable:** Yes

**CIM Information:** **Prefix:** PLAT and **ID:** 0498

**SNMP Trap ID:** 0

**Automatically notify Support:** No

**User response:**

1. Make sure that the fans are operating, that there are no obstructions to the airflow (front and rear of the server), that the air baffle is in place and correctly installed, and that the server cover is installed and completely closed.
2. Check the ambient temperature. You must be operating within the specifications (see Server Features and specifications for more information).
3. (Trained technician only) Replace system board.

**80010b01-2d01ffff Numeric sensor [NumericSensorElementName] going high (upper non-recoverable) has asserted. (PCH Temp)**

**Explanation:** This message is for the use case when an implementation has detected an Upper Non-recoverable sensor going high has asserted.

May also be shown as 80010b012d01ffff or 0x80010b012d01ffff

**Severity:** Error

**Alert Category:** Critical - Temperature

**Serviceable:** Yes

**CIM Information:** **Prefix:** PLAT and **ID:** 0498

**SNMP Trap ID:** 0

**Automatically notify Support:** No

**User response:**

1. Make sure that the fans are operating, that there are no obstructions to the airflow (front and rear of the server), that the air baffle is in place and correctly installed, and that the server cover is installed and completely closed.
2. Check the ambient temperature. You must be operating within the specifications (see Server Features and specifications for more information).
3. (Trained technician only) Replace system board.

**80010b01-3701ffff Numeric sensor [NumericSensorElementName] going high (upper non-recoverable) has asserted. (Ambient Temp)**

**Explanation:** This message is for the use case when an implementation has detected an Upper Non-recoverable sensor going high has asserted.

May also be shown as 80010b013701ffff or 0x80010b013701ffff

**Severity:** Error

**Alert Category:** Critical - Temperature

**Serviceable:** Yes

**CIM Information:** **Prefix:** PLAT and **ID:** 0498

**SNMP Trap ID:** 0

**Automatically notify Support:** No

**User response:**

1. Check operator informationpanel cable is connected.
2. Check the ambient temperature. You must be operating within the specifications (see Server Features and specifications for more information).
3. Replace operator information cable or usb assembly cable.
4. (Trained technician only) Replace system board.

---

**80030006-2101ffff Sensor [SensorElementName] has deasserted. (Sig Verify Fail)**

**Explanation:** This message is for the use case when an implementation has detected a Sensor has deasserted.

May also be shown as 800300062101ffff or 0x800300062101ffff

**Severity:** Info

**Alert Category:** System - Other

**Serviceable:** No

**CIM Information:** **Prefix:** PLAT and **ID:** 0509

**SNMP Trap ID:**

**Automatically notify Support:** No

**User response:** No action; information only.

---

**80030012-2301ffff Sensor [SensorElementName] has deasserted. (OS RealTime Mod)**

**Explanation:** This message is for the use case when an implementation has detected a Sensor has deasserted.

May also be shown as 800300122301ffff or 0x800300122301ffff

**Severity:** Info

**Alert Category:** System - Other

**Serviceable:** No

**CIM Information:** **Prefix:** PLAT and **ID:** 0509

**SNMP Trap ID:**

**Automatically notify Support:** No

**User response:** No action; information only.

**80030108-1301ffff Sensor [SensorElementName] has asserted. (PS Heavy Load)**

**Explanation:** This message is for the use case when an implementation has detected a Sensor has asserted.

May also be shown as 800301081301ffff or 0x800301081301ffff

**Severity:** Info

**Alert Category:** System - Other

**Serviceable:** No

**CIM Information:** **Prefix:** PLAT and **ID:** 0508

**SNMP Trap ID:**

**Automatically notify Support:** No

**User response:**

1. Replace the power supply with higher rated power.
2. Reduce the total power consumption by removing newly added or unused option like drives or adapters.

---

**8003010c-2581ffff Sensor [SensorElementName] has asserted. (Non-Auth DIMMs)**

**Explanation:** This message is for the use case when an implementation has detected a Sensor has asserted.

May also be shown as 8003010c2581ffff or 0x8003010c2581ffff

**Severity:** Info

**Alert Category:** System - Other

**Serviceable:** No

**CIM Information:** **Prefix:** PLAT and **ID:** 0508

**SNMP Trap ID:**

**Automatically notify Support:** No

**User response:**

1. Replace as authorized DIMM.
2. Please contact sales representative or IBM/Lenovo support.

---

**8003010f-2101ffff Sensor [SensorElementName] has asserted. (IMM FW Corrupted)**

**Explanation:** This message is for the use case when an implementation has detected a Sensor has asserted.

May also be shown as 8003010f2101ffff or 0x8003010f2101ffff

**Severity:** Info

**Alert Category:** System - Other

**Serviceable:** No

**CIM Information:** **Prefix:** PLAT and **ID:** 0508

**SNMP Trap ID:**

**Automatically notify Support:** No

**User response:**

1. Reflash primary code.
2. Disconnect power cord and reconnect.
3. (Trained techinician only)please replace system board if the problem still exist.

**80030112-0601ffff Sensor [SensorElementName] has asserted. (SMM Mode)**

**Explanation:** This message is for the use case when an implementation has detected a Sensor has asserted.

May also be shown as 800301120601ffff or 0x800301120601ffff

**Severity:** Info

**Alert Category:** System - Other

**Serviceable:** No

**CIM Information:** **Prefix:** PLAT and **ID:** 0508

**SNMP Trap ID:**

**Automatically notify Support:** No

**User response:**

1. Replace the power supply with higher rated power.
2. Reduce the total power consumption by removing newly added or unused option like drives or adapters.

SMM Monitor :

---

**8007000d-2582ffff Sensor [SensorElementName] has transitioned to normal state. (RAID Vol State)**

**Explanation:** This message is for the use case when an implementation has detected a Sensor transition to the normal state.

May also be shown as 8007000d2582ffff or 0x8007000d2582ffff

**Severity:** Info

**Alert Category:** Warning - Other

**Serviceable:** No

**CIM Information:** **Prefix:** PLAT and **ID:** 0518

**SNMP Trap ID:** 60

**Automatically notify Support:** No

**User response:** No action; information only.

---

**80070101-0c01ffff Sensor [SensorElementName] has transitioned from normal to non-critical state. (Ambient Status)**

**Explanation:** This message is for the use case when an implementation has detected a Sensor transitioned to non-critical from normal.

May also be shown as 800701010c01ffff or 0x800701010c01ffff

**Severity:** Warning

**Alert Category:** Warning - Temperature

**Serviceable:** Yes

**CIM Information:** **Prefix:** PLAT and **ID:** 0520

**SNMP Trap ID:** 12

**Automatically notify Support:** No

**User response:**

1. Check the microprocessor installed is Intel E5-2690.
2. Reduce the ambient temperature under 27 Celsius degree.

**80070101-2c01ffff Sensor [SensorElementName] has transitioned from normal to non-critical state. (ML2 OverTemp)**

**Explanation:** This message is for the use case when an implementation has detected a Sensor transitioned to non-critical from normal.

May also be shown as 800701012c01ffff or 0x800701012c01ffff

**Severity:** Warning

**Alert Category:** Warning - Temperature

**Serviceable:** Yes

**CIM Information:** **Prefix:** PLAT and **ID:** 0520

**SNMP Trap ID:** 12

**Automatically notify Support:** No

**User response:**

1. Make sure that the fans are operating, that there are no obstructions to the airflow (front and rear of the server), that the air baffle is in place and correctly installed, and that the server cover is installed and completely closed.
2. Check the ambient temperature. You must be operating within the specifications (see Server Features and specifications for more information).
3. Replace the failed ML2 card.

**8007010d-2582ffff Sensor [SensorElementName] has transitioned from normal to non-critical state. (RAID Vol State)**

**Explanation:** This message is for the use case when an implementation has detected a Sensor transitioned to non-critical from normal.

May also be shown as 8007010d2582ffff or 0x8007010d2582ffff

**Severity:** Warning

**Alert Category:** Warning - Other

**Serviceable:** Yes

**CIM Information:** **Prefix:** PLAT and **ID:** 0520

**SNMP Trap ID:** 60

**Automatically notify Support:** No

**User response:**

1. Run the hard disk drive diagnostic test on drive n.
2. Reseat the following components: a. Hard disk drive (wait 1 minute or more before reinstalling the drive) b. Cable from the system board to the backplane
3. Replace the following components one at a time, in the order shown, restarting the server each time: a. Hard disk drive b. Cable from the system board to the backplane c. Hard disk drive backplane (n = hard disk drive number)

**8007010f-2201ffff Sensor [SensorElementName] has transitioned from normal to non-critical state. (GPT Status)**

**Explanation:** This message is for the use case when an implementation has detected a Sensor transitioned to non-critical from normal.

May also be shown as 8007010f2201ffff or 0x8007010f2201ffff

**Severity:** Warning

**Alert Category:** Warning - Other

**Serviceable:** Yes

**CIM Information:** **Prefix:** PLAT and **ID:** 0520

**SNMP Trap ID:** 60

**Automatically notify Support:** No

**User response:**

1. Check the IBM support site for service bulletins or firmware updates that apply to this GPT error.
2. Set the UEFI setting DISK GPT Recovery to Automatic.
3. Replace the corrupt disk.

**8007010f-2582ffff Sensor [SensorElementName] has transitioned from normal to non-critical state. (I/O Resources)**

**Explanation:** This message is for the use case when an implementation has detected a Sensor transitioned to non-critical from normal.

May also be shown as 8007010f2582ffff or 0x8007010f2582ffff

**Severity:** Warning

**Alert Category:** Warning - Other

**Serviceable:** Yes

**CIM Information:** **Prefix:** PLAT and **ID:** 0520

**SNMP Trap ID:** 60

**Automatically notify Support:** No

**User response:** Complete the following step to solve PCI I/O resource errors:

1. Go to F1 Setup
2. System Settings
3. Device and I/O ports
4. PCI 64 bit Resource and choose enable

**80070114-2201ffff Sensor [SensorElementName] has transitioned from normal to non-critical state. (TPM Phy Pres Set)**

**Explanation:** This message is for the use case when an implementation has detected a Sensor transitioned to non-critical from normal.

May also be shown as 800701142201ffff or 0x800701142201ffff

**Severity:** Warning

**Alert Category:** Warning - Other

**Serviceable:** Yes

**CIM Information:** **Prefix:** PLAT and **ID:** 0520

**SNMP Trap ID:** 60

**Automatically notify Support:** No

**User response:**

1. Complete the administrative tasks that require the TPM physical presence switch to be in the ON position.
2. Restore the physical presence switch to the OFF position.
3. Reboot the system.
4. (Trained technician only) If the error continues, replace the planar.

**80070128-2e01ffff Sensor [SensorElementName] has transitioned from normal to non-critical state. (ME Recovery)**

**Explanation:** This message is for the use case when an implementation has detected a Sensor transitioned to non-critical from normal.

May also be shown as 800701282e01ffff or 0x800701282e01ffff

**Severity:** Warning

**Alert Category:** Warning - Other

**Serviceable:** Yes

**CIM Information:** **Prefix:** PLAT and **ID:** 0520

**SNMP Trap ID:** 60

**Automatically notify Support:** No

**User response:** None

**80070201-0301ffff Sensor [SensorElementName] has transitioned to critical from a less severe state. (CPU 1 OverTemp)**

**Explanation:** This message is for the use case when an implementation has detected a Sensor transitioned to critical from less severe.

May also be shown as 800702010301ffff or 0x800702010301ffff

**Severity:** Error

**Alert Category:** Critical - Temperature

**Serviceable:** Yes

**CIM Information:** **Prefix:** PLAT and **ID:** 0522

**SNMP Trap ID:** 0

**Automatically notify Support:** No

**User response:**

1. Make sure that the fans are operating, that there are no obstructions to the airflow (front and rear of the server), that the air baffles are in place and correctly installed, and that the server cover is installed and completely closed.
2. Check the ambient temperature. You must be operating within the specifications (see Features and specifications for more information).
3. Make sure that the heat sink for microprocessor n is installed correctly.
4. (Trained technician only) Replace microprocessor n. (n = microprocessor number)

---

**80070201-0302ffff Sensor [SensorElementName] has transitioned to critical from a less severe state. (CPU 2 OverTemp)**

**Explanation:** This message is for the use case when an implementation has detected a Sensor transitioned to critical from less severe.

May also be shown as 800702010302ffff or 0x800702010302ffff

**Severity:** Error

**Alert Category:** Critical - Temperature

**Serviceable:** Yes

**CIM Information:** **Prefix:** PLAT and **ID:** 0522

**SNMP Trap ID:** 0

**Automatically notify Support:** No

**User response:**

1. Make sure that the fans are operating, that there are no obstructions to the airflow (front and rear of the server), that the air baffles are in place and correctly installed, and that the server cover is installed and completely closed.
2. Check the ambient temperature. You must be operating within the specifications (see Features and specifications for more information).
3. Make sure that the heat sink for microprocessor n is installed correctly.
4. (Trained technician only) Replace microprocessor n. (n = microprocessor number)

---

**80070202-0701ffff Sensor [SensorElementName] has transitioned to critical from a less severe state. (SysBrd Vol Fault)**

**Explanation:** This message is for the use case when an implementation has detected a Sensor transitioned to critical from less severe.

May also be shown as 800702020701ffff or 0x800702020701ffff

**Severity:** Error

**Alert Category:** Critical - Voltage

**Serviceable:** Yes

**CIM Information:** **Prefix:** PLAT and **ID:** 0522

**SNMP Trap ID:** 1

**Automatically notify Support:** No

**User response:**

1. Check the system-event log.
2. Check for an error LED on the system board.
3. Replace any failing device.
4. Check for a server firmware update. Important: Some cluster solutions require specific code levels or coordinated code updates. If the device is part of a cluster solution, verify that the latest level of code is supported for the cluster solution before you update the code.
5. (Trained technician only) Replace the system board.

**80070204-0a01ffff Sensor [SensorElementName] has transitioned to critical from a less severe state. (PS 1 Fan Fault)**

**Explanation:** This message is for the use case when an implementation has detected a Sensor transitioned to critical from less severe.

May also be shown as 800702040a01ffff or 0x800702040a01ffff

**Severity:** Error

**Alert Category:** Critical - Fan Failure

**Serviceable:** Yes

**CIM Information:** **Prefix:** PLAT and **ID:** 0522

**SNMP Trap ID:** 11

**Automatically notify Support:** No

**User response:**

1. Make sure that there are no obstructions, such as bundled cables, to the airflow from the power-supply fan.
2. Replace power supply n. (n = power supply number)

---

**80070204-0a02ffff Sensor [SensorElementName] has transitioned to critical from a less severe state. (PS 2 Fan Fault)**

**Explanation:** This message is for the use case when an implementation has detected a Sensor transitioned to critical from less severe.

May also be shown as 800702040a02ffff or 0x800702040a02ffff

**Severity:** Error

**Alert Category:** Critical - Fan Failure

**Serviceable:** Yes

**CIM Information:** **Prefix:** PLAT and **ID:** 0522

**SNMP Trap ID:** 11

**Automatically notify Support:** No

**User response:**

1. Make sure that there are no obstructions, such as bundled cables, to the airflow from the power-supply fan.
2. Replace power supply n. (n = power supply number)

---

**80070208-0a01ffff Sensor [SensorElementName] has transitioned to critical from a less severe state. (PS 1 Therm Fault)**

**Explanation:** This message is for the use case when an implementation has detected a Sensor transitioned to critical from less severe.

May also be shown as 800702080a01ffff or 0x800702080a01ffff

**Severity:** Error

**Alert Category:** Critical - Power

**Serviceable:** Yes

**CIM Information:** **Prefix:** PLAT and **ID:** 0522

**SNMP Trap ID:** 4

**Automatically notify Support:** No

**User response:**

1. Make sure that there are no obstructions, such as bundled cables, to the airflow from the power-supply fan.

2. Use the IBM Power Configurator utility to ensure current system power consumption is under limitation. For more information and to download the utility, go to http://www-03.ibm.com/systems/bladecenter/resources/powerconfig.html.
3. Replace power supply n. (n = power supply number)

---

**80070208-0a02ffff Sensor [SensorElementName] has transitioned to critical from a less severe state. (PS 2 Therm Fault)**

**Explanation:** This message is for the use case when an implementation has detected a Sensor transitioned to critical from less severe.

May also be shown as 800702080a02ffff or 0x800702080a02ffff

**Severity:** Error

**Alert Category:** Critical - Power

**Serviceable:** Yes

**CIM Information:** **Prefix:** PLAT and **ID:** 0522

**SNMP Trap ID:** 4

**Automatically notify Support:** No

**User response:**

1. Make sure that there are no obstructions, such as bundled cables, to the airflow from the power-supply fan.
2. Use the IBM Power Configurator utility to ensure current system power consumption is under limitation. For more information and to download the utility, go to http://www-03.ibm.com/systems/bladecenter/resources/powerconfig.html.
3. Replace power supply n. (n = power supply number)

---

**8007020c-2502ffff Sensor [SensorElementName] has transitioned to critical from a less severe state. (nvDIMM 02 Status)**

**Explanation:** This message is for the use case when an implementation has detected a Sensor transitioned to critical from less severe.

May also be shown as 8007020c2502ffff or 0x8007020c2502ffff

**Severity:** Error

**Alert Category:** Critical - Other

**Serviceable:** Yes

**CIM Information:** **Prefix:** PLAT and **ID:** 0522

**SNMP Trap ID:** 50

**Automatically notify Support:** No

**User response:** None

**8007020c-2505ffff Sensor [SensorElementName] has transitioned to critical from a less severe state. (nvDIMM 05 Status)**

**Explanation:** This message is for the use case when an implementation has detected a Sensor transitioned to critical from less severe.

May also be shown as 8007020c2505ffff or 0x8007020c2505ffff

**Severity:** Error

**Alert Category:** Critical - Other

**Serviceable:** Yes

**CIM Information:** **Prefix:** PLAT and **ID:** 0522

**SNMP Trap ID:** 50

**Automatically notify Support:** No

**User response:** None

---

**8007020c-2508ffff Sensor [SensorElementName] has transitioned to critical from a less severe state. (nvDIMM 08 Status)**

**Explanation:** This message is for the use case when an implementation has detected a Sensor transitioned to critical from less severe.

May also be shown as 8007020c2508ffff or 0x8007020c2508ffff

**Severity:** Error

**Alert Category:** Critical - Other

**Serviceable:** Yes

**CIM Information:** **Prefix:** PLAT and **ID:** 0522

**SNMP Trap ID:** 50

**Automatically notify Support:** No

**User response:** None

---

**8007020c-250bffff Sensor [SensorElementName] has transitioned to critical from a less severe state. (nvDIMM 11 Status)**

**Explanation:** This message is for the use case when an implementation has detected a Sensor transitioned to critical from less severe.

May also be shown as 8007020c250bffff or 0x8007020c250bffff

**Severity:** Error

**Alert Category:** Critical - Other

**Serviceable:** Yes

**CIM Information:** **Prefix:** PLAT and **ID:** 0522

**SNMP Trap ID:** 50

**Automatically notify Support:** No

**User response:** None

**8007020d-2582ffff Sensor [SensorElementName] has transitioned to critical from a less severe state. (RAID Vol State)**

**Explanation:** This message is for the use case when an implementation has detected a Sensor transitioned to critical from less severe.

May also be shown as 8007020d2582ffff or 0x8007020d2582ffff

**Severity:** Error

**Alert Category:** Critical - Other

**Serviceable:** Yes

**CIM Information:** **Prefix:** PLAT and **ID:** 0522

**SNMP Trap ID:** 50

**Automatically notify Support:** No

**User response:**

1. Run the hard disk drive diagnostic test on drive n.
2. Reseat the following components: a. Hard disk drive (wait 1 minute or more before reinstalling the drive) b. Cable from the system board to the backplane
3. Replace the following components one at a time, in the order shown, restarting the server each time: a. Hard disk drive b. Cable from the system board to the backplane c. Hard disk drive backplane (n = hard disk drive number)

**8007020f-2201ffff Sensor [SensorElementName] has transitioned to critical from a less severe state. (TXT ACM Module)**

**Explanation:** This message is for the use case when an implementation has detected a Sensor transitioned to critical from less severe.

May also be shown as 8007020f2201ffff or 0x8007020f2201ffff

**Severity:** Error

**Alert Category:** Critical - Other

**Serviceable:** Yes

**CIM Information:** **Prefix:** PLAT and **ID:** 0522

**SNMP Trap ID:** 50

**Automatically notify Support:** No

**User response:**

1. If enabling TXT is not required, disable TXT from the Setup Utility.
2. If enabling TXT is required, verify that the TPM is enabled and activated from the Setup Utility.
3. If the problem remains, contact your service representative.

**8007020f-2582ffff Sensor [SensorElementName] has transitioned to critical from a less severe state. (I/O Resources)**

**Explanation:** This message is for the use case when an implementation has detected a Sensor transitioned to critical from less severe.

May also be shown as 8007020f2582ffff or 0x8007020f2582ffff

**Severity:** Error

**Alert Category:** Critical - Other

**Serviceable:** Yes

**CIM Information:** **Prefix:** PLAT and **ID:** 0522

**SNMP Trap ID:** 50

**Automatically notify Support:** No

**User response:** Complete the following step to solve PCI I/O resource errors:

1. Go to F1 Setup
2. System Settings
3. System Settings -> Device and I/O ports "PCI 64 bit Resource"
4. choose "enable"

**80070214-2201ffff Sensor [SensorElementName] has transitioned to critical from a less severe state. (TPM Lock)**

**Explanation:** This message is for the use case when an implementation has detected a Sensor transitioned to critical from less severe.

May also be shown as 800702142201ffff or 0x800702142201ffff

**Severity:** Error

**Alert Category:** Critical - Other

**Serviceable:** No

**CIM Information:** **Prefix:** PLAT and **ID:** 0522

**SNMP Trap ID:**

**Automatically notify Support:** No

**User response:**

1. Update the server firmware (see Recovering the server firmware).
2. If the problem persists, (trained technician only) replace the system board (see Removing the system board and Installing the system board).

**80070219-0701ffff Sensor [SensorElementName] has transitioned to critical from a less severe state. (SysBrd Fault)**

**Explanation:** This message is for the use case when an implementation has detected a Sensor transitioned to critical from less severe.

May also be shown as 800702190701ffff or 0x800702190701ffff

**Severity:** Error

**Alert Category:** Critical - Other

**Serviceable:** Yes

**CIM Information:** **Prefix:** PLAT and **ID:** 0522

**SNMP Trap ID:** 50

**Automatically notify Support:** No

**User response:**

1. Check for an error LED on the system board.
2. Check the system-event log.
3. Check for a server firmware update. Important: Some cluster solutions require specific code levels or coordinated code updates. If the device is part of a cluster solution, verify that the latest level of code is supported for the cluster solution before you update the code.
4. Replace any failing device.
5. (Trained technician only) Replace the system board.

**8007021b-0301ffff Sensor [SensorElementName] has transitioned to critical from a less severe state. (CPU 1 QPILinkErr)**

**Explanation:** This message is for the use case when an implementation has detected a Sensor transitioned to critical from less severe.

May also be shown as 8007021b0301ffff or 0x8007021b0301ffff

**Severity:** Error

**Alert Category:** Critical - Other

**Serviceable:** Yes

**CIM Information:** **Prefix:** PLAT and **ID:** 0522

**SNMP Trap ID:** 50

**Automatically notify Support:** No

**User response:**

1. Check for a server firmware update.
2. Make sure that the installed microprocessors are compatible.
3. Make sure the microprocessor 2 expansion board is installed correctly (see Installing the microprocessor 2 expansion board).
4. (Trained technician only) Replace microprocessor 2.
5. (Trained technician only) Replace microprocessor 2 expansion board.

**8007021b-0302ffff Sensor [SensorElementName] has transitioned to critical from a less severe state. (CPU 2 QPILinkErr)**

**Explanation:** This message is for the use case when an implementation has detected a Sensor transitioned to critical from less severe.

May also be shown as 8007021b0302ffff or 0x8007021b0302ffff

**Severity:** Error

**Alert Category:** Critical - Other

**Serviceable:** Yes

**CIM Information:** **Prefix:** PLAT and **ID:** 0522

**SNMP Trap ID:** 50

**Automatically notify Support:** No

**User response:**

1. Check for a server firmware update.
2. Make sure that the installed microprocessors are compatible.
3. Make sure the microprocessor 2 expansion board is installed correctly (see Installing the microprocessor 2 expansion board).
4. (Trained technician only) Replace microprocessor
5. (Trained technician only) Replace microprocessor 2 expansion board.

---

**80070228-2e01ffff Sensor [SensorElementName] has transitioned to critical from a less severe state. (ME Error)**

**Explanation:** This message is for the use case when an implementation has detected a Sensor transitioned to critical from less severe.

May also be shown as 800702282e01ffff or 0x800702282e01ffff

**Severity:** Error

**Alert Category:** Critical - Other

**Serviceable:** Yes

**CIM Information:** **Prefix:** PLAT and **ID:** 0522

**SNMP Trap ID:** 50

**Automatically notify Support:** No

**User response:** None ME Flash Error :

---

**80070301-0301ffff Sensor [SensorElementName] has transitioned to non-recoverable from a less severe state. (CPU 1 OverTemp)**

**Explanation:** This message is for the use case when an implementation has detected a Sensor transitioned to non-recoverable from less severe.

May also be shown as 800703010301ffff or 0x800703010301ffff

**Severity:** Error

**Alert Category:** Critical - Temperature

**Serviceable:** Yes

**CIM Information:** **Prefix:** PLAT and **ID:** 0524

**SNMP Trap ID:** 0

**Automatically notify Support:** No

**User response:**

1. Make sure that the fans are operating, that there are no obstructions to the airflow (front and rear of the server), that the air baffle is in place and correctly installed, and that the server cover is installed and completely closed.
2. Check the ambient temperature. You must be operating within the specifications (see Server Features and specifications for more information).
3. Make sure that the heat sink for microprocessor n.
4. (Trained technician only) Replace microprocessor n. (n = microprocessor number)

---

**80070301-0302ffff Sensor [SensorElementName] has transitioned to non-recoverable from a less severe state. (CPU 2 OverTemp)**

**Explanation:** This message is for the use case when an implementation has detected a Sensor transitioned to non-recoverable from less severe.

May also be shown as 800703010302ffff or 0x800703010302ffff

**Severity:** Error

**Alert Category:** Critical - Temperature

**Serviceable:** Yes

**CIM Information:** **Prefix:** PLAT and **ID:** 0524

**SNMP Trap ID:** 0

**Automatically notify Support:** No

**User response:**

1. Make sure that the fans are operating, that there are no obstructions to the airflow (front and rear of the server), that the air baffle is in place and correctly installed, and that the server cover is installed and completely closed.
2. Check the ambient temperature. You must be operating within the specifications (see Server Features and specifications for more information).
3. Make sure that the heat sink for microprocessor n.
4. (Trained technician only) Replace microprocessor n. (n = microprocessor number)

---

**80070301-2c01ffff Sensor [SensorElementName] has transitioned to non-recoverable from a less severe state. (ML2 OverTemp)**

**Explanation:** This message is for the use case when an implementation has detected a Sensor transitioned to non-recoverable from less severe.

May also be shown as 800703012c01ffff or 0x800703012c01ffff

**Severity:** Error

**Alert Category:** Critical - Temperature

**Serviceable:** Yes

**CIM Information:** **Prefix:** PLAT and **ID:** 0524

**SNMP Trap ID:** 0

**Automatically notify Support:** No

**User response:**

1. Make sure that the fans are operating, that there are no obstructions to the airflow (front and rear of the server), that the air baffle is in place and correctly installed, and that the server cover is installed and completely closed.
2. Check the ambient temperature. You must be operating within the specifications (see Server Features and specifications for more information).
3. Make sure that the heat sink for microprocessor n.
4. (Trained technician only) Replace microprocessor n. (n = microprocessor number)

**8007030d-2582ffff Sensor [SensorElementName] has transitioned to non-recoverable from a less severe state. (RAID Vol State)**

**Explanation:** This message is for the use case when an implementation has detected a Sensor transitioned to non-recoverable from less severe.

May also be shown as 8007030d2582ffff or 0x8007030d2582ffff

**Severity:** Error

**Alert Category:** Critical - Other

**Serviceable:** Yes

**CIM Information:** **Prefix:** PLAT and **ID:** 0524

**SNMP Trap ID:** 50

**Automatically notify Support:** No

**User response:**

1. Run the hard disk drive diagnostic test on drive n.
2. Reseat the following components: a. Hard disk drive (wait 1 minute or more before reinstalling the drive) b. Cable from the system board to the backplane
3. Replace the following components one at a time, in the order shown, restarting the server each time: a. Hard disk drive b. Cable from the system board to the backplane c. Hard disk drive backplane (n = hard disk drive number)

---

**80070608-0a01ffff Sensor [SensorElementName] has transitioned to non-recoverable.**

**Explanation:** This message is for the use case when an implementation has detected a Sensor transitioned to non-recoverable.

May also be shown as 800706080a01ffff or 0x800706080a01ffff

**Severity:** Error

**Alert Category:** Critical - Power

**Serviceable:** Yes

**CIM Information:** **Prefix:** PLAT and **ID:** 0530

**SNMP Trap ID:** 4

**Automatically notify Support:** No

**User response:** If the specified sensor is PS n 12V OC Fault, complete the following steps until the problem is solved:

1. Use the IBM Power Configurator utility to determine current system power consumption. For more information and to download the utility, go to http://www-03.ibm.com/systems/bladecenter/resources/powerconfig.html.
2. Follow actions in "Power Problems and Solving Power Problems".

If the specified sensor is PS n 12V OV Fault, complete the following steps until the problem is solved:

1. Check power supply n LED.
2. Remove the failing power supply.
3. (Trained technician only) Replace the system board. (n = power supply number)

If the specified sensor is PS n 12V UV Fault, complete the following steps until the problem is solved:

1. Check power supply n LED.
2. Remove the failing power supply.
3. Follow actions in "Power Problems and Solving Power Problems".
4. (Trained technician only) Replace the system board. (n = power supply number)

If the specified sensor is PS n 12Vaux Fault, complete the following steps until the problem is solved:

1. Check power supply n LED.
2. Replace power supply n. (n = power supply number)

---

**80070608-0a02ffff Sensor [SensorElementName] has transitioned to non-recoverable.**

**Explanation:** This message is for the use case when an implementation has detected a Sensor transitioned to non-recoverable.

May also be shown as 800706080a02ffff or 0x800706080a02ffff

**Severity:** Error

**Alert Category:** Critical - Power

**Serviceable:** Yes

**CIM Information:** **Prefix:** PLAT and **ID:** 0530

**SNMP Trap ID:** 4

**Automatically notify Support:** No

**User response:** If the specified sensor is PS n 12V OC Fault, complete the following steps until the problem is solved:

1. Use the IBM Power Configurator utility to determine current system power consumption. For more information and to download the utility, go to http://www-03.ibm.com/systems/bladecenter/resources/powerconfig.html.
2. Follow actions in "Power Problems and Solving Power Problems".

If the specified sensor is PS n 12V OV Fault, complete the following steps until the problem is solved:

1. Check power supply n LED.
2. Remove the failing power supply.
3. (Trained technician only) Replace the system board. (n = power supply number)

If the specified sensor is PS n 12V UV Fault, complete the following steps until the problem is solved:

1. Check power supply n LED.
2. Remove the failing power supply.
3. Follow actions in "Power Problems and Solving Power Problems".
4. (Trained technician only) Replace the system board. (n = power supply number)

If the specified sensor is PS n 12Vaux Fault, complete the following steps until the problem is solved:

1. Check power supply n LED.
2. Replace power supply n. (n = power supply number)

**80070614-2201ffff Sensor [SensorElementName] has transitioned to non-recoverable. (TPM Phy Pres Set)**

**Explanation:** This message is for the use case when an implementation has detected a Sensor transitioned to non-recoverable.

May also be shown as 800706142201ffff or 0x800706142201ffff

**Severity:** Error

**Alert Category:** Critical - Other

**Serviceable:** Yes

**CIM Information:** **Prefix:** PLAT and **ID:** 0530

**SNMP Trap ID:** 50

**Automatically notify Support:** No

**User response:**

1. Update the server firmware (see Recovering the server firmware).
2. If the problem persists, (trained technician only) replace the system board (see Removing the system board and Installing the system board).

---

**8008010f-2101ffff Device [LogicalDeviceElementName] has been added. (Phy Presence Jmp)**

**Explanation:** This message is for the use case when an implementation has detected a Device was inserted.

May also be shown as 8008010f2101ffff or 0x8008010f2101ffff

**Severity:** Info

**Alert Category:** System - Other

**Serviceable:** No

**CIM Information:** **Prefix:** PLAT and **ID:** 0536

**SNMP Trap ID:**

**Automatically notify Support:** No

**User response:** No action; information only.

---

**80080128-2101ffff Device [LogicalDeviceElementName] has been added. (Low Security Jmp)**

**Explanation:** This message is for the use case when an implementation has detected a Device was inserted.

May also be shown as 800801282101ffff or 0x800801282101ffff

**Severity:** Info

**Alert Category:** System - Other

**Serviceable:** No

**CIM Information:** **Prefix:** PLAT and **ID:** 0536

**SNMP Trap ID:**

**Automatically notify Support:** No

**User response:** No action; information only.

**800b0008-1301ffff Redundancy [RedundancySetElementName] has been restored. (Power Unit)**

**Explanation:** This message is for the use case when an implementation has detected Redundancy was Restored.

May also be shown as 800b00081301ffff or 0x800b00081301ffff

**Severity:** Info

**Alert Category:** Warning - Redundant Power Supply

**Serviceable:** No

**CIM Information:** **Prefix:** PLAT and **ID:** 0561

**SNMP Trap ID:** 10

**Automatically notify Support:** No

**User response:** No action; information only.

---

**800b0108-1301ffff Redundancy Lost for [RedundancySetElementName] has asserted. (Power Unit)**

**Explanation:** This message is for the use case when Redundancy Lost has asserted.

May also be shown as 800b01081301ffff or 0x800b01081301ffff

**Severity:** Error

**Alert Category:** Critical - Redundant Power Supply

**Serviceable:** Yes

**CIM Information:** **Prefix:** PLAT and **ID:** 0802

**SNMP Trap ID:** 9

**Automatically notify Support:** No

**User response:**

1. Check the LEDs for both power supplies.
2. Follow the actions in Power-supply LEDs.

---

**800b010a-1e81ffff Redundancy Lost for [RedundancySetElementName] has asserted. (Fan Zone 1)**

**Explanation:** This message is for the use case when Redundancy Lost has asserted.

May also be shown as 800b010a1e81ffff or 0x800b010a1e81ffff

**Severity:** Error

**Alert Category:** Critical - Fan Failure

**Serviceable:** Yes

**CIM Information:** **Prefix:** PLAT and **ID:** 0802

**SNMP Trap ID:** 11

**Automatically notify Support:** No

**User response:**

1. Make sure that the connectors on fan n are not damaged.
2. Make sure that the fan n connectors on the system board are not damaged.
3. Make sure that the fans are correctly installed.
4. Reseat the fans.
5. Replace the fans. (n = fan number)

**800b010a-1e82ffff Redundancy Lost for [RedundancySetElementName] has asserted. (Fan Zone 2)**

**Explanation:** This message is for the use case when Redundancy Lost has asserted.

May also be shown as 800b010a1e82ffff or 0x800b010a1e82ffff

**Severity:** Error

**Alert Category:** Critical - Fan Failure

**Serviceable:** Yes

**CIM Information:** **Prefix:** PLAT and **ID:** 0802

**SNMP Trap ID:** 11

**Automatically notify Support:** No

**User response:**

1. Make sure that the connectors on fan n are not damaged.
2. Make sure that the fan n connectors on the system board are not damaged.
3. Make sure that the fans are correctly installed.
4. Reseat the fans.
5. Replace the fans. (n = fan number)

**800b010a-1e83ffff Redundancy Lost for [RedundancySetElementName] has asserted. (Fan Zone 3)**

**Explanation:** This message is for the use case when Redundancy Lost has asserted.

May also be shown as 800b010a1e83ffff or 0x800b010a1e83ffff

**Severity:** Error

**Alert Category:** Critical - Fan Failure

**Serviceable:** Yes

**CIM Information:** **Prefix:** PLAT and **ID:** 0802

**SNMP Trap ID:** 11

**Automatically notify Support:** No

**User response:**

1. Make sure that the connectors on fan n are not damaged.
2. Make sure that the fan n connectors on the system board are not damaged.
3. Make sure that the fans are correctly installed.
4. Reseat the fans.
5. Replace the fans. (n = fan number)

**800b010a-1e84ffff Redundancy Lost for [RedundancySetElementName] has asserted. (Fan Zone 4)**

**Explanation:** This message is for the use case when Redundancy Lost has asserted.

May also be shown as 800b010a1e84ffff or 0x800b010a1e84ffff

**Severity:** Error

**Alert Category:** Critical - Fan Failure

**Serviceable:** Yes

**CIM Information:** **Prefix:** PLAT and **ID:** 0802

**SNMP Trap ID:** 11

**Automatically notify Support:** No

**User response:**

1. Make sure that the connectors on fan n are not damaged.
2. Make sure that the fan n connectors on the system board are not damaged.
3. Make sure that the fans are correctly installed.
4. Reseat the fans.
5. Replace the fans. (n = fan number)

**800b010c-2581ffff Redundancy Lost for [RedundancySetElementName] has asserted. (Backup Memory)**

**Explanation:** This message is for the use case when Redundancy Lost has asserted.

May also be shown as 800b010c2581ffff or 0x800b010c2581ffff

**Severity:** Error

**Alert Category:** Critical - Memory

**Serviceable:** Yes

**CIM Information:** **Prefix:** PLAT and **ID:** 0802

**SNMP Trap ID:** 41

**Automatically notify Support:** No

**User response:**

1. If you have added or removed DIMMs to the system, and no additional errors were detected, then please ignore this message.
2. Check system event log for uncorrected DIMM failures.
3. Replace those DIMMs.
4. Re-enable mirroring in the Setup utility.

**800b0309-1301ffff Non-redundant:Sufficient Resources from Redundancy Degraded or Fully Redundant for [RedundancySetElementName] has asserted. (Power Resource)**

**Explanation:** This message is for the use case when a Redundancy Set has transitioned from Redundancy Degraded or Fully Redundant to Non-redundant:Sufficient.

May also be shown as 800b03091301ffff or 0x800b03091301ffff

**Severity:** Warning

**Alert Category:** Warning - Redundant Power Supply

**Serviceable:** Yes

**CIM Information:** **Prefix:** PLAT and **ID:** 0806

**SNMP Trap ID:** 10

**Automatically notify Support:** No

**User response:**

1. Non-redundant sufficient: Power load will be handled by remaining power supply, though the system may throttle to avoid a power supply over-current condition.
2. Please check and reseat the lost power cord or power supply.
3. Please replace the failed power supply.

**800b030c-2581ffff Non-redundant:Sufficient Resources from Redundancy Degraded or Fully Redundant for [RedundancySetElementName] has asserted. (Backup Memory)**

**Explanation:** This message is for the use case when a Redundancy Set has transitioned from Redundancy Degraded or Fully Redundant to Non-redundant:Sufficient.

May also be shown as 800b030c2581ffff or 0x800b030c2581ffff

**Severity:** Warning

**Alert Category:** Warning - Memory

**Serviceable:** Yes

**CIM Information:** **Prefix:** PLAT and **ID:** 0806

**SNMP Trap ID:** 43

**Automatically notify Support:** No

**User response:**

1. Check the system-event log for DIMM failure events (uncorrectable or PFA) and correct the failures.
2. Re-enable mirroring in the Setup utility.

**800b0509-1301ffff Non-redundant:Insufficient Resources for [RedundancySetElementName] has asserted. (Power Resource)**

**Explanation:** This message is for the use case when a Redundancy Set has transitioned to Non-redundant:Insufficient Resources.

May also be shown as 800b05091301ffff or 0x800b05091301ffff

**Severity:** Error

**Alert Category:** Critical - Redundant Power Supply

**Serviceable:** Yes

**CIM Information:** **Prefix:** PLAT and **ID:** 0810

**SNMP Trap ID:** 9

**Automatically notify Support:** No

**User response:**

1. Power load may be handled by remaining power supply. The system will attempt to throttle to avoid a power supply over-current condition. But a system shutdown may happen anyway if the power load is too great.
2. Reduce the total power consumption by removing newly added or unused options like drives or adaptors.
3. Use the IBM Power Configurator utility to determine current system power consumption. For more information and to download the utility, go to http://www-03.ibm.com/systems/bladecenter/resources/powerconfig.html.
4. Replace the power supply with higher rated power if Oversubscription_Fault seen in power supply.
5. Please reseat power cords and power supplies.

**800b050a-1e81ffff Non-redundant:Insufficient Resources for [RedundancySetElementName] has asserted. (Fan Zone 1)**

**Explanation:** This message is for the use case when a Redundancy Set has transitioned to Non-redundant:Insufficient Resources.

May also be shown as 800b050a1e81ffff or 0x800b050a1e81ffff

**Severity:** Error

**Alert Category:** Critical - Fan Failure

**Serviceable:** Yes

**CIM Information:** **Prefix:** PLAT and **ID:** 0810

**SNMP Trap ID:** 11

**Automatically notify Support:** No

**User response:**

1. Make sure that the connectors on fan n are not damaged.
2. Make sure that the fan n connectors on the system board are not damaged.
3. Make sure that the fans are correctly installed.
4. Reseat the fans.
5. Replace the fans. (n = fan number)

**800b050a-1e82ffff Non-redundant:Insufficient Resources for [RedundancySetElementName] has asserted. (Fan Zone 2)**

**Explanation:** This message is for the use case when a Redundancy Set has transitioned to Non-redundant:Insufficient Resources.

May also be shown as 800b050a1e82ffff or 0x800b050a1e82ffff

**Severity:** Error

**Alert Category:** Critical - Fan Failure

**Serviceable:** Yes

**CIM Information:** **Prefix:** PLAT and **ID:** 0810

**SNMP Trap ID:** 11

**Automatically notify Support:** No

**User response:**

1. Make sure that the connectors on fan n are not damaged.
2. Make sure that the fan n connectors on the system board are not damaged.
3. Make sure that the fans are correctly installed.
4. Reseat the fans.
5. Replace the fans. (n = fan number)

**800b050a-1e83ffff Non-redundant:Insufficient Resources for [RedundancySetElementName] has asserted. (Fan Zone 3)**

**Explanation:** This message is for the use case when a Redundancy Set has transitioned to Non-redundant:Insufficient Resources.

May also be shown as 800b050a1e83ffff or 0x800b050a1e83ffff

**Severity:** Error

**Alert Category:** Critical - Fan Failure

**Serviceable:** Yes

**CIM Information:** **Prefix:** PLAT and **ID:** 0810

**SNMP Trap ID:** 11

**Automatically notify Support:** No

**User response:**

1. Make sure that the connectors on fan n are not damaged.
2. Make sure that the fan n connectors on the system board are not damaged.
3. Make sure that the fans are correctly installed.
4. Reseat the fans.
5. Replace the fans. (n = fan number)

**800b050a-1e84ffff Non-redundant:Insufficient Resources for [RedundancySetElementName] has asserted. (Fan Zone 4)**

**Explanation:** This message is for the use case when a Redundancy Set has transitioned to Non-redundant:Insufficient Resources.

May also be shown as 800b050a1e84ffff or 0x800b050a1e84ffff

**Severity:** Error

**Alert Category:** Critical - Fan Failure

**Serviceable:** Yes

**CIM Information:** **Prefix:** PLAT and **ID:** 0810

**SNMP Trap ID:** 11

**Automatically notify Support:** No

**User response:**

1. Make sure that the connectors on fan n are not damaged.
2. Make sure that the fan n connectors on the system board are not damaged.
3. Make sure that the fans are correctly installed.
4. Reseat the fans.
5. Replace the fans. (n = fan number)

**800b050c-2581ffff Non-redundant:Insufficient Resources for [RedundancySetElementName] has asserted. (Backup Memory)**

**Explanation:** This message is for the use case when a Redundancy Set has transitioned to Non-redundant:Insufficient Resources.

May also be shown as 800b050c2581ffff or 0x800b050c2581ffff

**Severity:** Error

**Alert Category:** Critical - Memory

**Serviceable:** Yes

**CIM Information:** **Prefix:** PLAT and **ID:** 0810

**SNMP Trap ID:** 41

**Automatically notify Support:** No

**User response:**

1. Check the system-event log for DIMM failure events (uncorrectable or PFA) and correct the failures.
2. Re-enable mirroring in the Setup utility.

**806f0007-0301ffff [ProcessorElementName] has Failed with IERR. (CPU 1)**

**Explanation:** This message is for the use case when an implementation has detected a Processor Failed - IERR Condition.

May also be shown as 806f00070301ffff or 0x806f00070301ffff

**Severity:** Error

**Alert Category:** Critical - CPU

**Serviceable:** Yes

**CIM Information:** **Prefix:** PLAT and **ID:** 0042

**SNMP Trap ID:** 40

**Automatically notify Support:** No

**User response:**

1. Make sure that the latest level of firmware and device drivers are installed for all adapters and standard devices, such as Ethernet, SCSI, and SAS. Important: Some cluster solutions require specific code levels or coordinated code updates. If the device is part of a cluster solution, verify that the latest level of code is supported for the cluster solution before you update the code.
2. Update the firmware (UEFI and IMM) to the latest level (Updating the firmware).
3. Run the DSA program.
4. Reseat the adapter.
5. Replace the adapter.
6. (Trained technician only) Replace microprocessor n.
7. (Trained technician only) Replace the system board. (n = microprocessor number)

**806f0007-0302ffff [ProcessorElementName] has Failed with IERR. (CPU 2)**

**Explanation:** This message is for the use case when an implementation has detected a Processor Failed - IERR Condition.

May also be shown as 806f00070302ffff or 0x806f00070302ffff

**Severity:** Error

**Alert Category:** Critical - CPU

**Serviceable:** Yes

**CIM Information:** **Prefix:** PLAT and **ID:** 0042

**SNMP Trap ID:** 40

**Automatically notify Support:** No

**User response:**

1. Make sure that the latest level of firmware and device drivers are installed for all adapters and standard devices, such as Ethernet, SCSI, and SAS. Important: Some cluster solutions require specific code levels or coordinated code updates. If the device is part of a cluster solution, verify that the latest level of code is supported for the cluster solution before you update the code.
2. Update the firmware (UEFI and IMM) to the latest level (Updating the firmware).
3. Run the DSA program.
4. Reseat the adapter.
5. Replace the adapter.
6. (Trained technician only) Replace microprocessor n.
7. (Trained technician only) Replace the system board. (n = microprocessor number)

**806f0008-0a01ffff [PowerSupplyElementName] has been added to container [PhysicalPackageElementName]. (Power Supply 1)**

**Explanation:** This message is for the use case when an implementation has detected a Power Supply has been added.

May also be shown as 806f00080a01ffff or 0x806f00080a01ffff

**Severity:** Info

**Alert Category:** System - Other

**Serviceable:** No

**CIM Information:** **Prefix:** PLAT and **ID:** 0084

**SNMP Trap ID:**

**Automatically notify Support:** No

**User response:** No action; information only.

---

**806f0008-0a02ffff [PowerSupplyElementName] has been added to container [PhysicalPackageElementName]. (Power Supply 2)**

**Explanation:** This message is for the use case when an implementation has detected a Power Supply has been added.

May also be shown as 806f00080a02ffff or 0x806f00080a02ffff

**Severity:** Info

**Alert Category:** System - Other

**Serviceable:** No

**CIM Information:** **Prefix:** PLAT and **ID:** 0084

**SNMP Trap ID:**

**Automatically notify Support:** No

**User response:** No action; information only.

---

**806f0009-1301ffff [PowerSupplyElementName] has been turned off. (Host Power)**

**Explanation:** This message is for the use case when an implementation has detected a Power Unit that has been Disabled.

May also be shown as 806f00091301ffff or 0x806f00091301ffff

**Severity:** Info

**Alert Category:** System - Power Off

**Serviceable:** No

**CIM Information:** **Prefix:** PLAT and **ID:** 0106

**SNMP Trap ID:** 23

**Automatically notify Support:** No

**User response:** No action; information only.

**806f000d-0400ffff The Drive [StorageVolumeElementName] has been added. (Drive 0)**

**Explanation:** This message is for the use case when an implementation has detected a Drive has been Added.

May also be shown as 806f000d0400ffff or 0x806f000d0400ffff

**Severity:** Info

**Alert Category:** Critical - Hard Disk drive

**Serviceable:** No

**CIM Information:** **Prefix:** PLAT and **ID:** 0162

**SNMP Trap ID:** 5

**Automatically notify Support:** No

**User response:** No action; information only.

---

**806f000d-0401ffff The Drive [StorageVolumeElementName] has been added. (Drive 1)**

**Explanation:** This message is for the use case when an implementation has detected a Drive has been Added.

May also be shown as 806f000d0401ffff or 0x806f000d0401ffff

**Severity:** Info

**Alert Category:** Critical - Hard Disk drive

**Serviceable:** No

**CIM Information:** **Prefix:** PLAT and **ID:** 0162

**SNMP Trap ID:** 5

**Automatically notify Support:** No

**User response:** No action; information only.

---

**806f000d-0402ffff The Drive [StorageVolumeElementName] has been added. (Drive 2)**

**Explanation:** This message is for the use case when an implementation has detected a Drive has been Added.

May also be shown as 806f000d0402ffff or 0x806f000d0402ffff

**Severity:** Info

**Alert Category:** Critical - Hard Disk drive

**Serviceable:** No

**CIM Information:** **Prefix:** PLAT and **ID:** 0162

**SNMP Trap ID:** 5

**Automatically notify Support:** No

**User response:** No action; information only.

**806f000d-0403ffff The Drive [StorageVolumeElementName] has been added. (Drive 3)**

**Explanation:** This message is for the use case when an implementation has detected a Drive has been Added.

May also be shown as 806f000d0403ffff or 0x806f000d0403ffff

**Severity:** Info

**Alert Category:** Critical - Hard Disk drive

**Serviceable:** No

**CIM Information:** **Prefix:** PLAT and **ID:** 0162

**SNMP Trap ID:** 5

**Automatically notify Support:** No

**User response:** No action; information only.

---

**806f000d-0404ffff The Drive [StorageVolumeElementName] has been added. (Drive 4)**

**Explanation:** This message is for the use case when an implementation has detected a Drive has been Added.

May also be shown as 806f000d0404ffff or 0x806f000d0404ffff

**Severity:** Info

**Alert Category:** Critical - Hard Disk drive

**Serviceable:** No

**CIM Information:** **Prefix:** PLAT and **ID:** 0162

**SNMP Trap ID:** 5

**Automatically notify Support:** No

**User response:** No action; information only.

---

**806f000d-0405ffff The Drive [StorageVolumeElementName] has been added. (Drive 5)**

**Explanation:** This message is for the use case when an implementation has detected a Drive has been Added.

May also be shown as 806f000d0405ffff or 0x806f000d0405ffff

**Severity:** Info

**Alert Category:** Critical - Hard Disk drive

**Serviceable:** No

**CIM Information:** **Prefix:** PLAT and **ID:** 0162

**SNMP Trap ID:** 5

**Automatically notify Support:** No

**User response:** No action; information only.

**806f000d-0406ffff The Drive [StorageVolumeElementName] has been added. (Drive 6)**

**Explanation:** This message is for the use case when an implementation has detected a Drive has been Added.

May also be shown as 806f000d0406ffff or 0x806f000d0406ffff

**Severity:** Info

**Alert Category:** Critical - Hard Disk drive

**Serviceable:** No

**CIM Information:** **Prefix:** PLAT and **ID:** 0162

**SNMP Trap ID:** 5

**Automatically notify Support:** No

**User response:** No action; information only.

---

**806f000d-0407ffff The Drive [StorageVolumeElementName] has been added. (Drive 7)**

**Explanation:** This message is for the use case when an implementation has detected a Drive has been Added.

May also be shown as 806f000d0407ffff or 0x806f000d0407ffff

**Severity:** Info

**Alert Category:** Critical - Hard Disk drive

**Serviceable:** No

**CIM Information:** **Prefix:** PLAT and **ID:** 0162

**SNMP Trap ID:** 5

**Automatically notify Support:** No

**User response:** No action; information only.

---

**806f000d-0408ffff The Drive [StorageVolumeElementName] has been added. (Drive 8)**

**Explanation:** This message is for the use case when an implementation has detected a Drive has been Added.

May also be shown as 806f000d0408ffff or 0x806f000d0408ffff

**Severity:** Info

**Alert Category:** Critical - Hard Disk drive

**Serviceable:** No

**CIM Information:** **Prefix:** PLAT and **ID:** 0162

**SNMP Trap ID:** 5

**Automatically notify Support:** No

**User response:** No action; information only.

**806f000d-0409ffff The Drive [StorageVolumeElementName] has been added. (Drive 9)**

**Explanation:** This message is for the use case when an implementation has detected a Drive has been Added.

May also be shown as 806f000d0409ffff or 0x806f000d0409ffff

**Severity:** Info

**Alert Category:** Critical - Hard Disk drive

**Serviceable:** No

**CIM Information:** **Prefix:** PLAT and **ID:** 0162

**SNMP Trap ID:** 5

**Automatically notify Support:** No

**User response:** No action; information only.

---

**806f000d-040affff The Drive [StorageVolumeElementName] has been added. (Drive 10)**

**Explanation:** This message is for the use case when an implementation has detected a Drive has been Added.

May also be shown as 806f000d040affff or 0x806f000d040affff

**Severity:** Info

**Alert Category:** Critical - Hard Disk drive

**Serviceable:** No

**CIM Information:** **Prefix:** PLAT and **ID:** 0162

**SNMP Trap ID:** 5

**Automatically notify Support:** No

**User response:** No action; information only.

---

**806f000d-040bffff The Drive [StorageVolumeElementName] has been added. (Drive 11)**

**Explanation:** This message is for the use case when an implementation has detected a Drive has been Added.

May also be shown as 806f000d040bffff or 0x806f000d040bffff

**Severity:** Info

**Alert Category:** Critical - Hard Disk drive

**Serviceable:** No

**CIM Information:** **Prefix:** PLAT and **ID:** 0162

**SNMP Trap ID:** 5

**Automatically notify Support:** No

**User response:** No action; information only.

**806f000d-040cffff The Drive [StorageVolumeElementName] has been added. (Drive 12)**

**Explanation:** This message is for the use case when an implementation has detected a Drive has been Added.

May also be shown as 806f000d040cffff or 0x806f000d040cffff

**Severity:** Info

**Alert Category:** Critical - Hard Disk drive

**Serviceable:** No

**CIM Information:** **Prefix:** PLAT and **ID:** 0162

**SNMP Trap ID:** 5

**Automatically notify Support:** No

**User response:** No action; information only.

---

**806f000d-040dffff The Drive [StorageVolumeElementName] has been added. (Drive 13)**

**Explanation:** This message is for the use case when an implementation has detected a Drive has been Added.

May also be shown as 806f000d040dffff or 0x806f000d040dffff

**Severity:** Info

**Alert Category:** Critical - Hard Disk drive

**Serviceable:** No

**CIM Information:** **Prefix:** PLAT and **ID:** 0162

**SNMP Trap ID:** 5

**Automatically notify Support:** No

**User response:** No action; information only.

---

**806f000d-040effff The Drive [StorageVolumeElementName] has been added. (Drive 14)**

**Explanation:** This message is for the use case when an implementation has detected a Drive has been Added.

May also be shown as 806f000d040effff or 0x806f000d040effff

**Severity:** Info

**Alert Category:** Critical - Hard Disk drive

**Serviceable:** No

**CIM Information:** **Prefix:** PLAT and **ID:** 0162

**SNMP Trap ID:** 5

**Automatically notify Support:** No

**User response:** No action; information only.

**806f000d-040fffff The Drive [StorageVolumeElementName] has been added. (Drive 15)**

**Explanation:** This message is for the use case when an implementation has detected a Drive has been Added.

May also be shown as 806f000d040fffff or 0x806f000d040fffff

**Severity:** Info

**Alert Category:** Critical - Hard Disk drive

**Serviceable:** No

**CIM Information:** **Prefix:** PLAT and **ID:** 0162

**SNMP Trap ID:** 5

**Automatically notify Support:** No

**User response:** No action; information only.

---

**806f000d-0410ffff The Drive [StorageVolumeElementName] has been added. (Drive 16)**

**Explanation:** This message is for the use case when an implementation has detected a Drive has been Added.

May also be shown as 806f000d0410ffff or 0x806f000d0410ffff

**Severity:** Info

**Alert Category:** Critical - Hard Disk drive

**Serviceable:** No

**CIM Information:** **Prefix:** PLAT and **ID:** 0162

**SNMP Trap ID:** 5

**Automatically notify Support:** No

**User response:** No action; information only.

---

**806f000d-0411ffff The Drive [StorageVolumeElementName] has been added. (Drive 17)**

**Explanation:** This message is for the use case when an implementation has detected a Drive has been Added.

May also be shown as 806f000d0411ffff or 0x806f000d0411ffff

**Severity:** Info

**Alert Category:** Critical - Hard Disk drive

**Serviceable:** No

**CIM Information:** **Prefix:** PLAT and **ID:** 0162

**SNMP Trap ID:** 5

**Automatically notify Support:** No

**User response:** No action; information only.

**806f000d-0412ffff The Drive [StorageVolumeElementName] has been added. (Drive 18)**

**Explanation:** This message is for the use case when an implementation has detected a Drive has been Added.

May also be shown as 806f000d0412ffff or 0x806f000d0412ffff

**Severity:** Info

**Alert Category:** Critical - Hard Disk drive

**Serviceable:** No

**CIM Information:** **Prefix:** PLAT and **ID:** 0162

**SNMP Trap ID:** 5

**Automatically notify Support:** No

**User response:** No action; information only.

---

**806f000d-0413ffff The Drive [StorageVolumeElementName] has been added. (Drive 19)**

**Explanation:** This message is for the use case when an implementation has detected a Drive has been Added.

May also be shown as 806f000d0413ffff or 0x806f000d0413ffff

**Severity:** Info

**Alert Category:** Critical - Hard Disk drive

**Serviceable:** No

**CIM Information:** **Prefix:** PLAT and **ID:** 0162

**SNMP Trap ID:** 5

**Automatically notify Support:** No

**User response:** No action; information only.

---

**806f000d-0414ffff The Drive [StorageVolumeElementName] has been added. (Drive 20)**

**Explanation:** This message is for the use case when an implementation has detected a Drive has been Added.

May also be shown as 806f000d0414ffff or 0x806f000d0414ffff

**Severity:** Info

**Alert Category:** Critical - Hard Disk drive

**Serviceable:** No

**CIM Information:** **Prefix:** PLAT and **ID:** 0162

**SNMP Trap ID:** 5

**Automatically notify Support:** No

**User response:** No action; information only.

**806f000d-0415ffff The Drive [StorageVolumeElementName] has been added. (Drive 21)**

**Explanation:** This message is for the use case when an implementation has detected a Drive has been Added.

May also be shown as 806f000d0415ffff or 0x806f000d0415ffff

**Severity:** Info

**Alert Category:** Critical - Hard Disk drive

**Serviceable:** No

**CIM Information:** **Prefix:** PLAT and **ID:** 0162

**SNMP Trap ID:** 5

**Automatically notify Support:** No

**User response:** No action; information only.

---

**806f000d-0416ffff The Drive [StorageVolumeElementName] has been added. (Drive 22)**

**Explanation:** This message is for the use case when an implementation has detected a Drive has been Added.

May also be shown as 806f000d0416ffff or 0x806f000d0416ffff

**Severity:** Info

**Alert Category:** Critical - Hard Disk drive

**Serviceable:** No

**CIM Information:** **Prefix:** PLAT and **ID:** 0162

**SNMP Trap ID:** 5

**Automatically notify Support:** No

**User response:** No action; information only.

---

**806f000d-0417ffff The Drive [StorageVolumeElementName] has been added. (Drive 23)**

**Explanation:** This message is for the use case when an implementation has detected a Drive has been Added.

May also be shown as 806f000d0417ffff or 0x806f000d0417ffff

**Severity:** Info

**Alert Category:** Critical - Hard Disk drive

**Serviceable:** No

**CIM Information:** **Prefix:** PLAT and **ID:** 0162

**SNMP Trap ID:** 5

**Automatically notify Support:** No

**User response:** No action; information only.

**806f000d-0418ffff The Drive [StorageVolumeElementName] has been added. (Drive 24)**

**Explanation:** This message is for the use case when an implementation has detected a Drive has been Added.

May also be shown as 806f000d0418ffff or 0x806f000d0418ffff

**Severity:** Info

**Alert Category:** Critical - Hard Disk drive

**Serviceable:** No

**CIM Information:** **Prefix:** PLAT and **ID:** 0162

**SNMP Trap ID:** 5

**Automatically notify Support:** No

**User response:** No action; information only.

---

**806f000d-0419ffff The Drive [StorageVolumeElementName] has been added. (Drive 25)**

**Explanation:** This message is for the use case when an implementation has detected a Drive has been Added.

May also be shown as 806f000d0419ffff or 0x806f000d0419ffff

**Severity:** Info

**Alert Category:** Critical - Hard Disk drive

**Serviceable:** No

**CIM Information:** **Prefix:** PLAT and **ID:** 0162

**SNMP Trap ID:** 5

**Automatically notify Support:** No

**User response:** No action; information only.

---

**806f000d-041affff The Drive [StorageVolumeElementName] has been added. (Drive 26)**

**Explanation:** This message is for the use case when an implementation has detected a Drive has been Added.

May also be shown as 806f000d041affff or 0x806f000d041affff

**Severity:** Info

**Alert Category:** Critical - Hard Disk drive

**Serviceable:** No

**CIM Information:** **Prefix:** PLAT and **ID:** 0162

**SNMP Trap ID:** 5

**Automatically notify Support:** No

**User response:** No action; information only.

**806f000d-041bffff The Drive [StorageVolumeElementName] has been added. (Drive 27)**

**Explanation:** This message is for the use case when an implementation has detected a Drive has been Added.

May also be shown as 806f000d041bffff or 0x806f000d041bffff

**Severity:** Info

**Alert Category:** Critical - Hard Disk drive

**Serviceable:** No

**CIM Information:** **Prefix:** PLAT and **ID:** 0162

**SNMP Trap ID:** 5

**Automatically notify Support:** No

**User response:** No action; information only.

---

**806f000d-041cffff The Drive [StorageVolumeElementName] has been added. (Drive 28)**

**Explanation:** This message is for the use case when an implementation has detected a Drive has been Added.

May also be shown as 806f000d041cffff or 0x806f000d041cffff

**Severity:** Info

**Alert Category:** Critical - Hard Disk drive

**Serviceable:** No

**CIM Information:** **Prefix:** PLAT and **ID:** 0162

**SNMP Trap ID:** 5

**Automatically notify Support:** No

**User response:** No action; information only.

---

**806f000d-041dffff The Drive [StorageVolumeElementName] has been added. (Drive 29)**

**Explanation:** This message is for the use case when an implementation has detected a Drive has been Added.

May also be shown as 806f000d041dffff or 0x806f000d041dffff

**Severity:** Info

**Alert Category:** Critical - Hard Disk drive

**Serviceable:** No

**CIM Information:** **Prefix:** PLAT and **ID:** 0162

**SNMP Trap ID:** 5

**Automatically notify Support:** No

**User response:** No action; information only.

**806f000d-041effff The Drive [StorageVolumeElementName] has been added. (Drive 30)**

**Explanation:** This message is for the use case when an implementation has detected a Drive has been Added.

May also be shown as 806f000d041effff or 0x806f000d041effff

**Severity:** Info

**Alert Category:** Critical - Hard Disk drive

**Serviceable:** No

**CIM Information:** **Prefix:** PLAT and **ID:** 0162

**SNMP Trap ID:** 5

**Automatically notify Support:** No

**User response:** No action; information only.

---

**806f000d-041fffff The Drive [StorageVolumeElementName] has been added. (Drive 31)**

**Explanation:** This message is for the use case when an implementation has detected a Drive has been Added.

May also be shown as 806f000d041fffff or 0x806f000d041fffff

**Severity:** Info

**Alert Category:** Critical - Hard Disk drive

**Serviceable:** No

**CIM Information:** **Prefix:** PLAT and **ID:** 0162

**SNMP Trap ID:** 5

**Automatically notify Support:** No

**User response:** No action; information only.

---

**806f000f-220101ff The System [ComputerSystemElementName] has detected no memory in the system. (ABR Status)**

**Explanation:** This message is for the use case when an implementation has detected that memory was detected in the system.

May also be shown as 806f000f220101ff or 0x806f000f220101ff

**Severity:** Error

**Alert Category:** Critical - Memory

**Serviceable:** Yes

**CIM Information:** **Prefix:** PLAT and **ID:** 0794

**SNMP Trap ID:** 41

**Automatically notify Support:** No

**User response:**

1. Make sure that one or more DIMMs are installed in the server, and resolve any other currently existing memory errors.
2. If no memory fault is recorded in the logs and no DIMM connector error LEDs are lit, verify that all DIMM connectors are enabled using the Setup utility or the Advanced Settings Utility (ASU).
3. Re-Install all DIMMs verifying the correct population sequence, according to the service information for this product.
4. Replace DIMMs.
5. Recover the server firmware from the backup page: a. Restart the server. b. At the prompt, press F3 to recover the firmware. c. Update the server firmware on the primary page. Important: Some cluster solutions require

specific code levels or coordinated code updates. If the device is part of a cluster solution, verify that the latest level of code is supported for the cluster solution before you update the code.

6. If the problem remains, (trained technician only) replace the system board.

Firmware Error : Sys Boot Status :

---

**806f000f-220102ff Subsystem [MemoryElementName] has insufficient memory for operation. (ABR Status)**

**Explanation:** This message is for the use case when an implementation has detected that the usable Memory is insufficient for operation.

May also be shown as 806f000f220102ff or 0x806f000f220102ff

**Severity:** Error

**Alert Category:** Critical - Memory

**Serviceable:** Yes

**CIM Information:** **Prefix:** PLAT and **ID:** 0132

**SNMP Trap ID:** 41

**Automatically notify Support:** No

**User response:**

1. Make sure that one or more DIMMs are installed in the server, and resolve any other currently existing memory errors.
2. If no memory fault is recorded in the logs and no DIMM connector error LEDs are lit, verify that all DIMM connectors are enabled using the Setup utility or the Advanced Settings Utility (ASU).
3. Re-Install all DIMMs verifying the correct population sequence, according to the service information for this product.
4. Replace DIMMs.
5. Recover the server firmware from the backup page: a. Restart the server. b. At the prompt, press F3 to recover the firmware. c. Update the server firmware on the primary page. Important: Some cluster solutions require specific code levels or coordinated code updates. If the device is part of a cluster solution, verify that the latest level of code is supported for the cluster solution before you update the code.
6. If the problem remains, (trained technician only) replace the system board.

Firmware Error : Sys Boot Status :

---

**806f000f-220103ff The System [ComputerSystemElementName] encountered firmware error - unrecoverable boot device failure. (ABR Status)**

**Explanation:** This message is for the use case when an implementation has detected that System Firmware Error Unrecoverable boot device failure has occurred.

May also be shown as 806f000f220103ff or 0x806f000f220103ff

**Severity:** Error

**Alert Category:** Critical - Hard Disk drive

**Serviceable:** Yes

**CIM Information:** **Prefix:** PLAT and **ID:** 0770

**SNMP Trap ID:** 5

**Automatically notify Support:** No

**User response:** This is a UEFI detected event. The UEFI(POST) error code for this event can be found in the logged IMM message text. Please refer to the UEFI(POST) error code in the "UEFI(POST) error code" section of the Information Center for the appropriate user response. Firmware Error : Sys Boot Status :

**806f000f-220104ff The System [ComputerSystemElementName]has encountered a motherboard failure. (ABR Status)**

**Explanation:** This message is for the use case when an implementation has detected that a fatal motherboard failure in the system.

May also be shown as 806f000f220104ff or 0x806f000f220104ff

**Severity:** Error

**Alert Category:** Critical - Other

**Serviceable:** Yes

**CIM Information:** **Prefix:** PLAT and **ID:** 0795

**SNMP Trap ID:** 50

**Automatically notify Support:** No

**User response:** This is a UEFI detected event. The UEFI diagnostic code for this event can be found in the logged IMM message text. Please refer to the UEFI(POST) error code in the "UEFI(POST) error code" section of the Info Center for the appropriate user response. Firmware Error : Sys Boot Status :

---

**806f000f-220107ff The System [ComputerSystemElementName] encountered firmware error - unrecoverable keyboard failure. (ABR Status)**

**Explanation:** This message is for the use case when an implementation has detected that System Firmware Error Unrecoverable Keyboard failure has occurred.

May also be shown as 806f000f220107ff or 0x806f000f220107ff

**Severity:** Error

**Alert Category:** Critical - Other

**Serviceable:** Yes

**CIM Information:** **Prefix:** PLAT and **ID:** 0764

**SNMP Trap ID:** 50

**Automatically notify Support:** No

**User response:** This is a UEFI detected event. The UEFI(POST) error code for this event can be found in the logged IMM message text. Please refer to the UEFI(POST) error code in the "UEFI(POST) error code" section of the Information Center for the appropriate user response. Firmware Error : Sys Boot Status :

---

**806f000f-22010aff The System [ComputerSystemElementName] encountered firmware error - no video device detected. (ABR Status)**

**Explanation:** This message is for the use case when an implementation has detected that System Firmware Error No video device detected has occurred.

May also be shown as 806f000f22010aff or 0x806f000f22010aff

**Severity:** Error

**Alert Category:** Critical - Other

**Serviceable:** Yes

**CIM Information:** **Prefix:** PLAT and **ID:** 0766

**SNMP Trap ID:** 50

**Automatically notify Support:** No

**User response:** This is a UEFI detected event. The UEFI(POST) error for this event can be found in the logged IMM message text. Please refer to the UEFI(POST) error code in the "UEFI(POST) error code" section of the Information Center for the appropriate user response. Firmware Error : Sys Boot Status :

**806f000f-22010bff Firmware BIOS (ROM) corruption was detected on system [ComputerSystemElementName] during POST. (ABR Status)**

**Explanation:** Firmware BIOS (ROM) corruption was detected on the system during POST.

May also be shown as 806f000f22010bff or 0x806f000f22010bff

**Severity:** Info

**Alert Category:** Critical - Other

**Serviceable:** Yes

**CIM Information:** **Prefix:** PLAT and **ID:** 0850

**SNMP Trap ID:** 40

**Automatically notify Support:** No

**User response:**

1. Make sure the server meets the minimum configuration to start (see Power-supply LEDs).
2. Recover the server firmware from the backup page: a.Restart the server. b.At the prompt, press F3 to recover the firmware.
3. Update the server firmware to the latest level (see Updating the firmware). Important: Some cluster solutions require specific code levels or coordinated code updates. If the device is part of a cluster solution, verify that the latest level of code is supported for the cluster solution before you update the code.
4. Remove components one at a time, restarting the server each time, to see if the problem goes away.
5. If the problem remains, (trained service technician) replace the system board.

Firmware Error : Sys Boot Status :

**806f000f-22010cff CPU voltage mismatch detected on [ProcessorElementName]. (ABR Status)**

**Explanation:** This message is for the use case when an implementation has detected a CPU voltage mismatch with the socket voltage.

May also be shown as 806f000f22010cff or 0x806f000f22010cff

**Severity:** Error

**Alert Category:** Critical - CPU

**Serviceable:** Yes

**CIM Information:** **Prefix:** PLAT and **ID:** 0050

**SNMP Trap ID:** 40

**Automatically notify Support:** No

**User response:** This is a UEFI detected event. The UEFI(POST) error code for this event can be found in the logged IMM message text. Please refer to the UEFI(POST) error code in the "UEFI(POST) error code" section of the Info Center for the appropriate user response. Firmware Error : Sys Boot Status :

**806f000f-2201ffff The System [ComputerSystemElementName] encountered a POST Error. (ABR Status)**

**Explanation:** This message is for the use case when an implementation has detected a Post Error.

May also be shown as 806f000f2201ffff or 0x806f000f2201ffff

**Severity:** Error

**Alert Category:** Critical - Other

**Serviceable:** Yes

**CIM Information:** **Prefix:** PLAT and **ID:** 0184

**SNMP Trap ID:** 50

**Automatically notify Support:** No

**User response:** This is a UEFI detected event. The UEFI(POST) error code for this event can be found in the logged IMM message text. Please refer to the UEFI(POST) error code in the "UEFI(POST) error code" section of the Information Center for the appropriate user response. Firmware Error : Sys Boot Status :

---

**806f0013-1701ffff A diagnostic interrupt has occurred on system [ComputerSystemElementName]. (NMI State)**

**Explanation:** This message is for the use case when an implementation has detected a Front Panel NMI / Diagnostic Interrupt.

May also be shown as 806f00131701ffff or 0x806f00131701ffff

**Severity:** Error

**Alert Category:** Critical - Other

**Serviceable:** Yes

**CIM Information:** **Prefix:** PLAT and **ID:** 0222

**SNMP Trap ID:** 50

**Automatically notify Support:** No

**User response:** If the NMI button has not been pressed, complete the following steps:

1. Make sure that the NMI button is not pressed.
2. Replace the operator information panel cable.
3. Replace the operator information panel.

---

**806f001e-2201ffff No bootable media available for system [ComputerSystemElementName]. (No Boot Device)**

**Explanation:** This message is for the use case when an implementation has detected a System with No Bootable Media.

May also be shown as 806f001e2201ffff or 0x806f001e2201ffff

**Severity:** Info

**Alert Category:** System - Other

**Serviceable:** No

**CIM Information:** **Prefix:** PLAT and **ID:** 0286

**SNMP Trap ID:**

**Automatically notify Support:** No

**User response:** No action; information only.

**806f0021-2201ffff Fault in slot [PhysicalConnectorSystemElementName] on system [ComputerSystemElementName]. (No Op ROM Space)**

**Explanation:** This message is for the use case when an implementation has detected a Fault in a slot.

May also be shown as 806f00212201ffff or 0x806f00212201ffff

**Severity:** Error

**Alert Category:** Critical - Other

**Serviceable:** Yes

**CIM Information:** **Prefix:** PLAT and **ID:** 0330

**SNMP Trap ID:** 50

**Automatically notify Support:** Yes

**User response:**

1. Check the PCI LED.
2. Reseat the affected adapters and riser card.
3. Update the server firmware (UEFI and IMM) and adapter firmware. Important: Some cluster solutions require specific code levels or coordinated code updates. If the device is part of a cluster solution, verify that the latest level of code is supported for the cluster solution before you update the code.
4. Remove both adapters.
5. Replace the riser card.
6. (Trained service technicians only) Replace the system board.

**806f0021-2582ffff Fault in slot [PhysicalConnectorSystemElementName] on system [ComputerSystemElementName]. (All PCI Error)**

**Explanation:** This message is for the use case when an implementation has detected a Fault in a slot.

May also be shown as 806f00212582ffff or 0x806f00212582ffff

**Severity:** Error

**Alert Category:** Critical - Other

**Serviceable:** Yes

**CIM Information:** **Prefix:** PLAT and **ID:** 0330

**SNMP Trap ID:** 50

**Automatically notify Support:** Yes

**User response:**

1. Check the PCI LED.
2. Reseat the affected adapters and riser card.
3. Update the server firmware (UEFI and IMM) and adapter firmware. Important: Some cluster solutions require specific code levels or coordinated code updates. If the device is part of a cluster solution, verify that the latest level of code is supported for the cluster solution before you update the code.
4. Remove both adapters.
5. Replace the riser card.
6. (Trained service technicians only) Replace the system board. One of PCI Error :

**806f0021-2c01ffff Fault in slot [PhysicalConnectorSystemElementName] on system [ComputerSystemElementName]. (ML2 Card Fault)**

**Explanation:** This message is for the use case when an implementation has detected a Fault in a slot.

May also be shown as 806f00212c01ffff or 0x806f00212c01ffff

**Severity:** Error

**Alert Category:** Critical - Other

**Serviceable:** Yes

**CIM Information:** **Prefix:** PLAT and **ID:** 0330

**SNMP Trap ID:** 50

**Automatically notify Support:** Yes

**User response:**

1. Reseat the affected adapters and riser card.
2. Update the server firmware (UEFI and IMM) and adapter firmware. Important: Some cluster solutions require specific code levels or coordinated code updates. If the device is part of a cluster solution, verify that the latest level of code is supported for the cluster solution before you update the code.
3. Replace the affected adapters.
4. Replace the riser card.
5. (Trained service technicians only) Replace the system board.

**806f0021-3001ffff Fault in slot [PhysicalConnectorSystemElementName] on system [ComputerSystemElementName]. (Internal RAID)**

**Explanation:** This message is for the use case when an implementation has detected a Fault in a slot.

May also be shown as 806f00213001ffff or 0x806f00213001ffff

**Severity:** Error

**Alert Category:** Critical - Other

**Serviceable:** Yes

**CIM Information:** **Prefix:** PLAT and **ID:** 0330

**SNMP Trap ID:** 50

**Automatically notify Support:** Yes

**User response:**

1. Reseat the affected adapters and riser card.
2. Update the server firmware (UEFI and IMM) and adapter firmware. Important: Some cluster solutions require specific code levels or coordinated code updates. If the device is part of a cluster solution, verify that the latest level of code is supported for the cluster solution before you update the code.
3. Replace the affected adapters.
4. Replace the riser card.
5. (Trained service technicians only) Replace the system board.

PCI 1 : PCI 2 : PCI 3 : PCI 4 : PCI 5 : PCI 6 : PCI 7 : PCI 8 :

**806f0023-2101ffff Watchdog Timer expired for [WatchdogElementName]. (IPMI Watchdog)**

**Explanation:** This message is for the use case when an implementation has detected a Watchdog Timer Expired.

May also be shown as 806f00232101ffff or 0x806f00232101ffff

**Severity:** Info

**Alert Category:** System - Other

**Serviceable:** No

**CIM Information:** **Prefix:** PLAT and **ID:** 0368

**SNMP Trap ID:**

**Automatically notify Support:** No

**User response:** No action; information only.

---

**806f0028-2101ffff Sensor [SensorElementName] is unavailable or degraded on management system [ComputerSystemElementName]. (TPM Cmd Failures)**

**Explanation:** This message is for the use case when an implementation has detected a Sensor is Unavailable or degraded.

May also be shown as 806f00282101ffff or 0x806f00282101ffff

**Severity:** Warning

**Alert Category:** Warning - Other

**Serviceable:** Yes

**CIM Information:** **Prefix:** PLAT and **ID:** 0398

**SNMP Trap ID:** 60

**Automatically notify Support:** No

**User response:**

1. Turn off the server and disconnect the power cords. Reconnect the power cords and restart the server.
2. If the problem remains, (trained technician only) replace the system board.

---

**806f0107-0301ffff An Over-Temperature Condition has been detected on [ProcessorElementName]. (CPU 1)**

**Explanation:** This message is for the use case when an implementation has detected an Over-Temperature Condition Detected for Processor.

May also be shown as 806f01070301ffff or 0x806f01070301ffff

**Severity:** Error

**Alert Category:** Critical - Temperature

**Serviceable:** Yes

**CIM Information:** **Prefix:** PLAT and **ID:** 0036

**SNMP Trap ID:** 0

**Automatically notify Support:** No

**User response:**

1. Make sure that the fans are operating. There are no obstructions to the airflow (front and rear of the server), the air baffles are in place and correctly installed, and the server cover is installed and completely closed.
2. Make sure that the heat sink for microprocessor n is installed correctly.
3. (Trained technician only) Replace microprocessor n. (n = microprocessor number)

**806f0107-0302ffff An Over-Temperature Condition has been detected on [ProcessorElementName]. (CPU 2)**

**Explanation:** This message is for the use case when an implementation has detected an Over-Temperature Condition Detected for Processor.

May also be shown as 806f01070302ffff or 0x806f01070302ffff

**Severity:** Error

**Alert Category:** Critical - Temperature

**Serviceable:** Yes

**CIM Information:** **Prefix:** PLAT and **ID:** 0036

**SNMP Trap ID:** 0

**Automatically notify Support:** No

**User response:**

1. Make sure that the fans are operating. There are no obstructions to the airflow (front and rear of the server), the air baffles are in place and correctly installed, and the server cover is installed and completely closed.
2. Make sure that the heat sink for microprocessor n is installed correctly.
3. (Trained technician only) Replace microprocessor n. (n = microprocessor number)

---

**806f0108-0a01ffff [PowerSupplyElementName] has Failed. (Power Supply 1)**

**Explanation:** This message is for the use case when an implementation has detected a Power Supply has failed.

May also be shown as 806f01080a01ffff or 0x806f01080a01ffff

**Severity:** Error

**Alert Category:** Critical - Power

**Serviceable:** Yes

**CIM Information:** **Prefix:** PLAT and **ID:** 0086

**SNMP Trap ID:** 4

**Automatically notify Support:** Yes

**User response:**

1. Reseat power supply n.
2. If the power-on LED is not lit and the power-supply error LED is lit, replace power supply n.
3. If both the power-on LED and the power-supply error LED are not lit, see Power problems for more information. (n = power supply number)

**806f0108-0a02ffff [PowerSupplyElementName] has Failed. (Power Supply 2)**

**Explanation:** This message is for the use case when an implementation has detected a Power Supply has failed.

May also be shown as 806f01080a02ffff or 0x806f01080a02ffff

**Severity:** Error

**Alert Category:** Critical - Power

**Serviceable:** Yes

**CIM Information:** **Prefix:** PLAT and **ID:** 0086

**SNMP Trap ID:** 4

**Automatically notify Support:** Yes

**User response:**

1. Reseat power supply n.
2. If the power-on LED is not lit and the power-supply error LED is lit, replace power supply n.
3. If both the power-on LED and the power-supply error LED are not lit, see Power problems for more information. (n = power supply number)

---

**806f0109-1301ffff [PowerSupplyElementName] has been Power Cycled. (Host Power)**

**Explanation:** This message is for the use case when an implementation has detected a Power Unit that has been power cycled.

May also be shown as 806f01091301ffff or 0x806f01091301ffff

**Severity:** Info

**Alert Category:** System - Other

**Serviceable:** No

**CIM Information:** **Prefix:** PLAT and **ID:** 0108

**SNMP Trap ID:**

**Automatically notify Support:** No

**User response:** No action; information only.

---

**806f010c-2001ffff Uncorrectable error detected for [PhysicalMemoryElementName] on Subsystem [MemoryElementName]. (DIMM 1)**

**Explanation:** This message is for the use case when an implementation has detected a Memory uncorrectable error.

May also be shown as 806f010c2001ffff or 0x806f010c2001ffff

**Severity:** Error

**Alert Category:** Critical - Memory

**Serviceable:** Yes

**CIM Information:** **Prefix:** PLAT and **ID:** 0138

**SNMP Trap ID:** 41

**Automatically notify Support:** Yes

**User response:**

1. Check the IBM support website for an applicable retain tip or firmware update that applies to this memory error.
2. Swap the affected DIMMs (as indicated by the error LEDs on the system board or the event logs) to a different memory channel or microprocessor.
3. If the problem follows the DIMM, replace the failing DIMM.

4. If the problem occurs on the same DIMM connector, check the DIMM connector. If the connector contains any foreign material or is damaged, replace the system board.
5. (Trained technician only) Remove the affected microprocessor and check the microprocessor socket pins for any damaged pins. If a damage is found, replace the system board.
6. (Trained technician only) Replace the affected microprocessor.
7. Manually re-enable all affected DIMMs if the server firmware version is older than UEFI v1.10. If the server firmware version is UEFI v1.10 or newer, disconnect and reconnect the server to the power source and restart the server.
8. (Trained technician only) Replace the affected microprocessor.

---

**806f010c-2002ffff Uncorrectable error detected for [PhysicalMemoryElementName] on Subsystem [MemoryElementName]. (DIMM 2)**

**Explanation:** This message is for the use case when an implementation has detected a Memory uncorrectable error.

May also be shown as 806f010c2002ffff or 0x806f010c2002ffff

**Severity:** Error

**Alert Category:** Critical - Memory

**Serviceable:** Yes

**CIM Information:** **Prefix:** PLAT and **ID:** 0138

**SNMP Trap ID:** 41

**Automatically notify Support:** Yes

**User response:**

1. Check the IBM support website for an applicable retain tip or firmware update that applies to this memory error.
2. Swap the affected DIMMs (as indicated by the error LEDs on the system board or the event logs) to a different memory channel or microprocessor.
3. If the problem follows the DIMM, replace the failing DIMM.
4. If the problem occurs on the same DIMM connector, check the DIMM connector. If the connector contains any foreign material or is damaged, replace the system board.
5. (Trained technician only) Remove the affected microprocessor and check the microprocessor socket pins for any damaged pins. If a damage is found, replace the system board.
6. (Trained technician only) Replace the affected microprocessor.
7. Manually re-enable all affected DIMMs if the server firmware version is older than UEFI v1.10. If the server firmware version is UEFI v1.10 or newer, disconnect and reconnect the server to the power source and restart the server.
8. (Trained technician only) Replace the affected microprocessor.

**806f010c-2003ffff Uncorrectable error detected for [PhysicalMemoryElementName] on Subsystem [MemoryElementName]. (DIMM 3)**

**Explanation:** This message is for the use case when an implementation has detected a Memory uncorrectable error.

May also be shown as 806f010c2003ffff or 0x806f010c2003ffff

**Severity:** Error

**Alert Category:** Critical - Memory

**Serviceable:** Yes

**CIM Information:** **Prefix:** PLAT and **ID:** 0138

**SNMP Trap ID:** 41

**Automatically notify Support:** Yes

**User response:**

1. Check the IBM support website for an applicable retain tip or firmware update that applies to this memory error.
2. Swap the affected DIMMs (as indicated by the error LEDs on the system board or the event logs) to a different memory channel or microprocessor.
3. If the problem follows the DIMM, replace the failing DIMM.
4. If the problem occurs on the same DIMM connector, check the DIMM connector. If the connector contains any foreign material or is damaged, replace the system board.
5. (Trained technician only) Remove the affected microprocessor and check the microprocessor socket pins for any damaged pins. If a damage is found, replace the system board.
6. (Trained technician only) Replace the affected microprocessor.
7. Manually re-enable all affected DIMMs if the server firmware version is older than UEFI v1.10. If the server firmware version is UEFI v1.10 or newer, disconnect and reconnect the server to the power source and restart the server.
8. (Trained technician only) Replace the affected microprocessor.

**806f010c-2004ffff Uncorrectable error detected for [PhysicalMemoryElementName] on Subsystem [MemoryElementName]. (DIMM 4)**

**Explanation:** This message is for the use case when an implementation has detected a Memory uncorrectable error.

May also be shown as 806f010c2004ffff or 0x806f010c2004ffff

**Severity:** Error

**Alert Category:** Critical - Memory

**Serviceable:** Yes

**CIM Information:** **Prefix:** PLAT and **ID:** 0138

**SNMP Trap ID:** 41

**Automatically notify Support:** Yes

**User response:**

1. Check the IBM support website for an applicable retain tip or firmware update that applies to this memory error.
2. Swap the affected DIMMs (as indicated by the error LEDs on the system board or the event logs) to a different memory channel or microprocessor.
3. If the problem follows the DIMM, replace the failing DIMM.
4. If the problem occurs on the same DIMM connector, check the DIMM connector. If the connector contains any foreign material or is damaged, replace the system board.
5. (Trained technician only) Remove the affected microprocessor and check the microprocessor socket pins for any damaged pins. If a damage is found, replace the system board.
6. (Trained technician only) Replace the affected microprocessor.

7. Manually re-enable all affected DIMMs if the server firmware version is older than UEFI v1.10. If the server firmware version is UEFI v1.10 or newer, disconnect and reconnect the server to the power source and restart the server.
8. (Trained technician only) Replace the affected microprocessor.

---

**806f010c-2005ffff Uncorrectable error detected for [PhysicalMemoryElementName] on Subsystem [MemoryElementName]. (DIMM 5)**

**Explanation:** This message is for the use case when an implementation has detected a Memory uncorrectable error.

May also be shown as 806f010c2005ffff or 0x806f010c2005ffff

**Severity:** Error

**Alert Category:** Critical - Memory

**Serviceable:** Yes

**CIM Information:** **Prefix:** PLAT and **ID:** 0138

**SNMP Trap ID:** 41

**Automatically notify Support:** Yes

**User response:**

1. Check the IBM support website for an applicable retain tip or firmware update that applies to this memory error.
2. Swap the affected DIMMs (as indicated by the error LEDs on the system board or the event logs) to a different memory channel or microprocessor.
3. If the problem follows the DIMM, replace the failing DIMM.
4. If the problem occurs on the same DIMM connector, check the DIMM connector. If the connector contains any foreign material or is damaged, replace the system board.
5. (Trained technician only) Remove the affected microprocessor and check the microprocessor socket pins for any damaged pins. If a damage is found, replace the system board.
6. (Trained technician only) Replace the affected microprocessor.
7. Manually re-enable all affected DIMMs if the server firmware version is older than UEFI v1.10. If the server firmware version is UEFI v1.10 or newer, disconnect and reconnect the server to the power source and restart the server.
8. (Trained technician only) Replace the affected microprocessor.

---

**806f010c-2006ffff Uncorrectable error detected for [PhysicalMemoryElementName] on Subsystem [MemoryElementName]. (DIMM 6)**

**Explanation:** This message is for the use case when an implementation has detected a Memory uncorrectable error.

May also be shown as 806f010c2006ffff or 0x806f010c2006ffff

**Severity:** Error

**Alert Category:** Critical - Memory

**Serviceable:** Yes

**CIM Information:** **Prefix:** PLAT and **ID:** 0138

**SNMP Trap ID:** 41

**Automatically notify Support:** Yes

**User response:**

1. Check the IBM support website for an applicable retain tip or firmware update that applies to this memory error.
2. Swap the affected DIMMs (as indicated by the error LEDs on the system board or the event logs) to a different memory channel or microprocessor.
3. If the problem follows the DIMM, replace the failing DIMM.
4. If the problem occurs on the same DIMM connector, check the DIMM connector. If the connector contains any foreign material or is damaged, replace the system board.

5. (Trained technician only) Remove the affected microprocessor and check the microprocessor socket pins for any damaged pins. If a damage is found, replace the system board.
6. (Trained technician only) Replace the affected microprocessor.
7. Manually re-enable all affected DIMMs if the server firmware version is older than UEFI v1.10. If the server firmware version is UEFI v1.10 or newer, disconnect and reconnect the server to the power source and restart the server.
8. (Trained technician only) Replace the affected microprocessor.

---

**806f010c-2007ffff Uncorrectable error detected for [PhysicalMemoryElementName] on Subsystem [MemoryElementName]. (DIMM 7)**

**Explanation:** This message is for the use case when an implementation has detected a Memory uncorrectable error.

May also be shown as 806f010c2007ffff or 0x806f010c2007ffff

**Severity:** Error

**Alert Category:** Critical - Memory

**Serviceable:** Yes

**CIM Information:** **Prefix:** PLAT and **ID:** 0138

**SNMP Trap ID:** 41

**Automatically notify Support:** Yes

**User response:**

1. Check the IBM support website for an applicable retain tip or firmware update that applies to this memory error.
2. Swap the affected DIMMs (as indicated by the error LEDs on the system board or the event logs) to a different memory channel or microprocessor.
3. If the problem follows the DIMM, replace the failing DIMM.
4. If the problem occurs on the same DIMM connector, check the DIMM connector. If the connector contains any foreign material or is damaged, replace the system board.
5. (Trained technician only) Remove the affected microprocessor and check the microprocessor socket pins for any damaged pins. If a damage is found, replace the system board.
6. (Trained technician only) Replace the affected microprocessor.
7. Manually re-enable all affected DIMMs if the server firmware version is older than UEFI v1.10. If the server firmware version is UEFI v1.10 or newer, disconnect and reconnect the server to the power source and restart the server.
8. (Trained technician only) Replace the affected microprocessor.

---

**806f010c-2008ffff Uncorrectable error detected for [PhysicalMemoryElementName] on Subsystem [MemoryElementName]. (DIMM 8)**

**Explanation:** This message is for the use case when an implementation has detected a Memory uncorrectable error.

May also be shown as 806f010c2008ffff or 0x806f010c2008ffff

**Severity:** Error

**Alert Category:** Critical - Memory

**Serviceable:** Yes

**CIM Information:** **Prefix:** PLAT and **ID:** 0138

**SNMP Trap ID:** 41

**Automatically notify Support:** Yes

**User response:**

1. Check the IBM support website for an applicable retain tip or firmware update that applies to this memory error.
2. Swap the affected DIMMs (as indicated by the error LEDs on the system board or the event logs) to a different memory channel or microprocessor.

3. If the problem follows the DIMM, replace the failing DIMM.
4. If the problem occurs on the same DIMM connector, check the DIMM connector. If the connector contains any foreign material or is damaged, replace the system board.
5. (Trained technician only) Remove the affected microprocessor and check the microprocessor socket pins for any damaged pins. If a damage is found, replace the system board.
6. (Trained technician only) Replace the affected microprocessor.
7. Manually re-enable all affected DIMMs if the server firmware version is older than UEFI v1.10. If the server firmware version is UEFI v1.10 or newer, disconnect and reconnect the server to the power source and restart the server.
8. (Trained technician only) Replace the affected microprocessor.

---

**806f010c-2009ffff Uncorrectable error detected for [PhysicalMemoryElementName] on Subsystem [MemoryElementName]. (DIMM 9)**

**Explanation:** This message is for the use case when an implementation has detected a Memory uncorrectable error.

May also be shown as 806f010c2009ffff or 0x806f010c2009ffff

**Severity:** Error

**Alert Category:** Critical - Memory

**Serviceable:** Yes

**CIM Information:** **Prefix:** PLAT and **ID:** 0138

**SNMP Trap ID:** 41

**Automatically notify Support:** Yes

**User response:**

1. Check the IBM support website for an applicable retain tip or firmware update that applies to this memory error.
2. Swap the affected DIMMs (as indicated by the error LEDs on the system board or the event logs) to a different memory channel or microprocessor.
3. If the problem follows the DIMM, replace the failing DIMM.
4. If the problem occurs on the same DIMM connector, check the DIMM connector. If the connector contains any foreign material or is damaged, replace the system board.
5. (Trained technician only) Remove the affected microprocessor and check the microprocessor socket pins for any damaged pins. If a damage is found, replace the system board.
6. (Trained technician only) Replace the affected microprocessor.
7. Manually re-enable all affected DIMMs if the server firmware version is older than UEFI v1.10. If the server firmware version is UEFI v1.10 or newer, disconnect and reconnect the server to the power source and restart the server.
8. (Trained technician only) Replace the affected microprocessor.

**806f010c-200affff Uncorrectable error detected for [PhysicalMemoryElementName] on Subsystem [MemoryElementName]. (DIMM 10)**

**Explanation:** This message is for the use case when an implementation has detected a Memory uncorrectable error.

May also be shown as 806f010c200affff or 0x806f010c200affff

**Severity:** Error

**Alert Category:** Critical - Memory

**Serviceable:** Yes

**CIM Information:** **Prefix:** PLAT and **ID:** 0138

**SNMP Trap ID:** 41

**Automatically notify Support:** Yes

**User response:**

1. Check the IBM support website for an applicable retain tip or firmware update that applies to this memory error.
2. Swap the affected DIMMs (as indicated by the error LEDs on the system board or the event logs) to a different memory channel or microprocessor.
3. If the problem follows the DIMM, replace the failing DIMM.
4. If the problem occurs on the same DIMM connector, check the DIMM connector. If the connector contains any foreign material or is damaged, replace the system board.
5. (Trained technician only) Remove the affected microprocessor and check the microprocessor socket pins for any damaged pins. If a damage is found, replace the system board.
6. (Trained technician only) Replace the affected microprocessor.
7. Manually re-enable all affected DIMMs if the server firmware version is older than UEFI v1.10. If the server firmware version is UEFI v1.10 or newer, disconnect and reconnect the server to the power source and restart the server.
8. (Trained technician only) Replace the affected microprocessor.

**806f010c-200bffff Uncorrectable error detected for [PhysicalMemoryElementName] on Subsystem [MemoryElementName]. (DIMM 11)**

**Explanation:** This message is for the use case when an implementation has detected a Memory uncorrectable error.

May also be shown as 806f010c200bffff or 0x806f010c200bffff

**Severity:** Error

**Alert Category:** Critical - Memory

**Serviceable:** Yes

**CIM Information:** **Prefix:** PLAT and **ID:** 0138

**SNMP Trap ID:** 41

**Automatically notify Support:** Yes

**User response:**

1. Check the IBM support website for an applicable retain tip or firmware update that applies to this memory error.
2. Swap the affected DIMMs (as indicated by the error LEDs on the system board or the event logs) to a different memory channel or microprocessor.
3. If the problem follows the DIMM, replace the failing DIMM.
4. If the problem occurs on the same DIMM connector, check the DIMM connector. If the connector contains any foreign material or is damaged, replace the system board.
5. (Trained technician only) Remove the affected microprocessor and check the microprocessor socket pins for any damaged pins. If a damage is found, replace the system board.
6. (Trained technician only) Replace the affected microprocessor.

7. Manually re-enable all affected DIMMs if the server firmware version is older than UEFI v1.10. If the server firmware version is UEFI v1.10 or newer, disconnect and reconnect the server to the power source and restart the server.
8. (Trained technician only) Replace the affected microprocessor.

---

**806f010c-200cffff Uncorrectable error detected for [PhysicalMemoryElementName] on Subsystem [MemoryElementName]. (DIMM 12)**

**Explanation:** This message is for the use case when an implementation has detected a Memory uncorrectable error.

May also be shown as 806f010c200cffff or 0x806f010c200cffff

**Severity:** Error

**Alert Category:** Critical - Memory

**Serviceable:** Yes

**CIM Information:** **Prefix:** PLAT and **ID:** 0138

**SNMP Trap ID:** 41

**Automatically notify Support:** Yes

**User response:**

1. Check the IBM support website for an applicable retain tip or firmware update that applies to this memory error.
2. Swap the affected DIMMs (as indicated by the error LEDs on the system board or the event logs) to a different memory channel or microprocessor.
3. If the problem follows the DIMM, replace the failing DIMM.
4. If the problem occurs on the same DIMM connector, check the DIMM connector. If the connector contains any foreign material or is damaged, replace the system board.
5. (Trained technician only) Remove the affected microprocessor and check the microprocessor socket pins for any damaged pins. If a damage is found, replace the system board.
6. (Trained technician only) Replace the affected microprocessor.
7. Manually re-enable all affected DIMMs if the server firmware version is older than UEFI v1.10. If the server firmware version is UEFI v1.10 or newer, disconnect and reconnect the server to the power source and restart the server.
8. (Trained technician only) Replace the affected microprocessor.

---

**806f010c-200dffff Uncorrectable error detected for [PhysicalMemoryElementName] on Subsystem [MemoryElementName]. (DIMM 13)**

**Explanation:** This message is for the use case when an implementation has detected a Memory uncorrectable error.

May also be shown as 806f010c200dffff or 0x806f010c200dffff

**Severity:** Error

**Alert Category:** Critical - Memory

**Serviceable:** Yes

**CIM Information:** **Prefix:** PLAT and **ID:** 0138

**SNMP Trap ID:** 41

**Automatically notify Support:** Yes

**User response:**

1. Check the IBM support website for an applicable retain tip or firmware update that applies to this memory error.
2. Swap the affected DIMMs (as indicated by the error LEDs on the system board or the event logs) to a different memory channel or microprocessor.
3. If the problem follows the DIMM, replace the failing DIMM.
4. If the problem occurs on the same DIMM connector, check the DIMM connector. If the connector contains any foreign material or is damaged, replace the system board.

5. (Trained technician only) Remove the affected microprocessor and check the microprocessor socket pins for any damaged pins. If a damage is found, replace the system board.
6. (Trained technician only) Replace the affected microprocessor.
7. Manually re-enable all affected DIMMs if the server firmware version is older than UEFI v1.10. If the server firmware version is UEFI v1.10 or newer, disconnect and reconnect the server to the power source and restart the server.
8. (Trained technician only) Replace the affected microprocessor.

---

**806f010c-200effff Uncorrectable error detected for [PhysicalMemoryElementName] on Subsystem [MemoryElementName]. (DIMM 14)**

**Explanation:** This message is for the use case when an implementation has detected a Memory uncorrectable error.

May also be shown as 806f010c200effff or 0x806f010c200effff

**Severity:** Error

**Alert Category:** Critical - Memory

**Serviceable:** Yes

**CIM Information:** **Prefix:** PLAT and **ID:** 0138

**SNMP Trap ID:** 41

**Automatically notify Support:** Yes

**User response:**

1. Check the IBM support website for an applicable retain tip or firmware update that applies to this memory error.
2. Swap the affected DIMMs (as indicated by the error LEDs on the system board or the event logs) to a different memory channel or microprocessor.
3. If the problem follows the DIMM, replace the failing DIMM.
4. If the problem occurs on the same DIMM connector, check the DIMM connector. If the connector contains any foreign material or is damaged, replace the system board.
5. (Trained technician only) Remove the affected microprocessor and check the microprocessor socket pins for any damaged pins. If a damage is found, replace the system board.
6. (Trained technician only) Replace the affected microprocessor.
7. Manually re-enable all affected DIMMs if the server firmware version is older than UEFI v1.10. If the server firmware version is UEFI v1.10 or newer, disconnect and reconnect the server to the power source and restart the server.
8. (Trained technician only) Replace the affected microprocessor.

---

**806f010c-200fffff Uncorrectable error detected for [PhysicalMemoryElementName] on Subsystem [MemoryElementName]. (DIMM 15)**

**Explanation:** This message is for the use case when an implementation has detected a Memory uncorrectable error.

May also be shown as 806f010c200fffff or 0x806f010c200fffff

**Severity:** Error

**Alert Category:** Critical - Memory

**Serviceable:** Yes

**CIM Information:** **Prefix:** PLAT and **ID:** 0138

**SNMP Trap ID:** 41

**Automatically notify Support:** Yes

**User response:**

1. Check the IBM support website for an applicable retain tip or firmware update that applies to this memory error.
2. Swap the affected DIMMs (as indicated by the error LEDs on the system board or the event logs) to a different memory channel or microprocessor.

3. If the problem follows the DIMM, replace the failing DIMM.
4. If the problem occurs on the same DIMM connector, check the DIMM connector. If the connector contains any foreign material or is damaged, replace the system board.
5. (Trained technician only) Remove the affected microprocessor and check the microprocessor socket pins for any damaged pins. If a damage is found, replace the system board.
6. (Trained technician only) Replace the affected microprocessor.
7. Manually re-enable all affected DIMMs if the server firmware version is older than UEFI v1.10. If the server firmware version is UEFI v1.10 or newer, disconnect and reconnect the server to the power source and restart the server.
8. (Trained technician only) Replace the affected microprocessor.

---

**806f010c-2010ffff Uncorrectable error detected for [PhysicalMemoryElementName] on Subsystem [MemoryElementName]. (DIMM 16)**

**Explanation:** This message is for the use case when an implementation has detected a Memory uncorrectable error.

May also be shown as 806f010c2010ffff or 0x806f010c2010ffff

**Severity:** Error

**Alert Category:** Critical - Memory

**Serviceable:** Yes

**CIM Information:** **Prefix:** PLAT and **ID:** 0138

**SNMP Trap ID:** 41

**Automatically notify Support:** Yes

**User response:**

1. Check the IBM support website for an applicable retain tip or firmware update that applies to this memory error.
2. Swap the affected DIMMs (as indicated by the error LEDs on the system board or the event logs) to a different memory channel or microprocessor.
3. If the problem follows the DIMM, replace the failing DIMM.
4. If the problem occurs on the same DIMM connector, check the DIMM connector. If the connector contains any foreign material or is damaged, replace the system board.
5. (Trained technician only) Remove the affected microprocessor and check the microprocessor socket pins for any damaged pins. If a damage is found, replace the system board.
6. (Trained technician only) Replace the affected microprocessor.
7. Manually re-enable all affected DIMMs if the server firmware version is older than UEFI v1.10. If the server firmware version is UEFI v1.10 or newer, disconnect and reconnect the server to the power source and restart the server.
8. (Trained technician only) Replace the affected microprocessor.

**806f010c-2011ffff Uncorrectable error detected for [PhysicalMemoryElementName] on Subsystem [MemoryElementName]. (DIMM 17)**

**Explanation:** This message is for the use case when an implementation has detected a Memory uncorrectable error.

May also be shown as 806f010c2011ffff or 0x806f010c2011ffff

**Severity:** Error

**Alert Category:** Critical - Memory

**Serviceable:** Yes

**CIM Information:** **Prefix:** PLAT and **ID:** 0138

**SNMP Trap ID:** 41

**Automatically notify Support:** Yes

**User response:**

1. Check the IBM support website for an applicable retain tip or firmware update that applies to this memory error.
2. Swap the affected DIMMs (as indicated by the error LEDs on the system board or the event logs) to a different memory channel or microprocessor.
3. If the problem follows the DIMM, replace the failing DIMM.
4. If the problem occurs on the same DIMM connector, check the DIMM connector. If the connector contains any foreign material or is damaged, replace the system board.
5. (Trained technician only) Remove the affected microprocessor and check the microprocessor socket pins for any damaged pins. If a damage is found, replace the system board.
6. (Trained technician only) Replace the affected microprocessor.
7. Manually re-enable all affected DIMMs if the server firmware version is older than UEFI v1.10. If the server firmware version is UEFI v1.10 or newer, disconnect and reconnect the server to the power source and restart the server.
8. (Trained technician only) Replace the affected microprocessor.

**806f010c-2012ffff Uncorrectable error detected for [PhysicalMemoryElementName] on Subsystem [MemoryElementName]. (DIMM 18)**

**Explanation:** This message is for the use case when an implementation has detected a Memory uncorrectable error.

May also be shown as 806f010c2012ffff or 0x806f010c2012ffff

**Severity:** Error

**Alert Category:** Critical - Memory

**Serviceable:** Yes

**CIM Information:** **Prefix:** PLAT and **ID:** 0138

**SNMP Trap ID:** 41

**Automatically notify Support:** Yes

**User response:**

1. Check the IBM support website for an applicable retain tip or firmware update that applies to this memory error.
2. Swap the affected DIMMs (as indicated by the error LEDs on the system board or the event logs) to a different memory channel or microprocessor.
3. If the problem follows the DIMM, replace the failing DIMM.
4. If the problem occurs on the same DIMM connector, check the DIMM connector. If the connector contains any foreign material or is damaged, replace the system board.
5. (Trained technician only) Remove the affected microprocessor and check the microprocessor socket pins for any damaged pins. If a damage is found, replace the system board.
6. (Trained technician only) Replace the affected microprocessor.

7. Manually re-enable all affected DIMMs if the server firmware version is older than UEFI v1.10. If the server firmware version is UEFI v1.10 or newer, disconnect and reconnect the server to the power source and restart the server.
8. (Trained technician only) Replace the affected microprocessor.

---

**806f010c-2013ffff Uncorrectable error detected for [PhysicalMemoryElementName] on Subsystem [MemoryElementName]. (DIMM 19)**

**Explanation:** This message is for the use case when an implementation has detected a Memory uncorrectable error.

May also be shown as 806f010c2013ffff or 0x806f010c2013ffff

**Severity:** Error

**Alert Category:** Critical - Memory

**Serviceable:** Yes

**CIM Information:** **Prefix:** PLAT and **ID:** 0138

**SNMP Trap ID:** 41

**Automatically notify Support:** Yes

**User response:**

1. Check the IBM support website for an applicable retain tip or firmware update that applies to this memory error.
2. Swap the affected DIMMs (as indicated by the error LEDs on the system board or the event logs) to a different memory channel or microprocessor.
3. If the problem follows the DIMM, replace the failing DIMM.
4. If the problem occurs on the same DIMM connector, check the DIMM connector. If the connector contains any foreign material or is damaged, replace the system board.
5. (Trained technician only) Remove the affected microprocessor and check the microprocessor socket pins for any damaged pins. If a damage is found, replace the system board.
6. (Trained technician only) Replace the affected microprocessor.
7. Manually re-enable all affected DIMMs if the server firmware version is older than UEFI v1.10. If the server firmware version is UEFI v1.10 or newer, disconnect and reconnect the server to the power source and restart the server.
8. (Trained technician only) Replace the affected microprocessor.

---

**806f010c-2014ffff Uncorrectable error detected for [PhysicalMemoryElementName] on Subsystem [MemoryElementName]. (DIMM 20)**

**Explanation:** This message is for the use case when an implementation has detected a Memory uncorrectable error.

May also be shown as 806f010c2014ffff or 0x806f010c2014ffff

**Severity:** Error

**Alert Category:** Critical - Memory

**Serviceable:** Yes

**CIM Information:** **Prefix:** PLAT and **ID:** 0138

**SNMP Trap ID:** 41

**Automatically notify Support:** Yes

**User response:**

1. Check the IBM support website for an applicable retain tip or firmware update that applies to this memory error.
2. Swap the affected DIMMs (as indicated by the error LEDs on the system board or the event logs) to a different memory channel or microprocessor.
3. If the problem follows the DIMM, replace the failing DIMM.
4. If the problem occurs on the same DIMM connector, check the DIMM connector. If the connector contains any foreign material or is damaged, replace the system board.

5. (Trained technician only) Remove the affected microprocessor and check the microprocessor socket pins for any damaged pins. If a damage is found, replace the system board.
6. (Trained technician only) Replace the affected microprocessor.
7. Manually re-enable all affected DIMMs if the server firmware version is older than UEFI v1.10. If the server firmware version is UEFI v1.10 or newer, disconnect and reconnect the server to the power source and restart the server.
8. (Trained technician only) Replace the affected microprocessor.

---

**806f010c-2015ffff Uncorrectable error detected for [PhysicalMemoryElementName] on Subsystem [MemoryElementName]. (DIMM 21)**

**Explanation:** This message is for the use case when an implementation has detected a Memory uncorrectable error.

May also be shown as 806f010c2015ffff or 0x806f010c2015ffff

**Severity:** Error

**Alert Category:** Critical - Memory

**Serviceable:** Yes

**CIM Information:** **Prefix:** PLAT and **ID:** 0138

**SNMP Trap ID:** 41

**Automatically notify Support:** Yes

**User response:**

1. Check the IBM support website for an applicable retain tip or firmware update that applies to this memory error.
2. Swap the affected DIMMs (as indicated by the error LEDs on the system board or the event logs) to a different memory channel or microprocessor.
3. If the problem follows the DIMM, replace the failing DIMM.
4. If the problem occurs on the same DIMM connector, check the DIMM connector. If the connector contains any foreign material or is damaged, replace the system board.
5. (Trained technician only) Remove the affected microprocessor and check the microprocessor socket pins for any damaged pins. If a damage is found, replace the system board.
6. (Trained technician only) Replace the affected microprocessor.
7. Manually re-enable all affected DIMMs if the server firmware version is older than UEFI v1.10. If the server firmware version is UEFI v1.10 or newer, disconnect and reconnect the server to the power source and restart the server.
8. (Trained technician only) Replace the affected microprocessor.

---

**806f010c-2016ffff Uncorrectable error detected for [PhysicalMemoryElementName] on Subsystem [MemoryElementName]. (DIMM 22)**

**Explanation:** This message is for the use case when an implementation has detected a Memory uncorrectable error.

May also be shown as 806f010c2016ffff or 0x806f010c2016ffff

**Severity:** Error

**Alert Category:** Critical - Memory

**Serviceable:** Yes

**CIM Information:** **Prefix:** PLAT and **ID:** 0138

**SNMP Trap ID:** 41

**Automatically notify Support:** Yes

**User response:**

1. Check the IBM support website for an applicable retain tip or firmware update that applies to this memory error.
2. Swap the affected DIMMs (as indicated by the error LEDs on the system board or the event logs) to a different memory channel or microprocessor.

3. If the problem follows the DIMM, replace the failing DIMM.
4. If the problem occurs on the same DIMM connector, check the DIMM connector. If the connector contains any foreign material or is damaged, replace the system board.
5. (Trained technician only) Remove the affected microprocessor and check the microprocessor socket pins for any damaged pins. If a damage is found, replace the system board.
6. (Trained technician only) Replace the affected microprocessor.
7. Manually re-enable all affected DIMMs if the server firmware version is older than UEFI v1.10. If the server firmware version is UEFI v1.10 or newer, disconnect and reconnect the server to the power source and restart the server.
8. (Trained technician only) Replace the affected microprocessor.

---

**806f010c-2017ffff Uncorrectable error detected for [PhysicalMemoryElementName] on Subsystem [MemoryElementName]. (DIMM 23)**

**Explanation:** This message is for the use case when an implementation has detected a Memory uncorrectable error.

May also be shown as 806f010c2017ffff or 0x806f010c2017ffff

**Severity:** Error

**Alert Category:** Critical - Memory

**Serviceable:** Yes

**CIM Information:** **Prefix:** PLAT and **ID:** 0138

**SNMP Trap ID:** 41

**Automatically notify Support:** Yes

**User response:**

1. Check the IBM support website for an applicable retain tip or firmware update that applies to this memory error.
2. Swap the affected DIMMs (as indicated by the error LEDs on the system board or the event logs) to a different memory channel or microprocessor.
3. If the problem follows the DIMM, replace the failing DIMM.
4. If the problem occurs on the same DIMM connector, check the DIMM connector. If the connector contains any foreign material or is damaged, replace the system board.
5. (Trained technician only) Remove the affected microprocessor and check the microprocessor socket pins for any damaged pins. If a damage is found, replace the system board.
6. (Trained technician only) Replace the affected microprocessor.
7. Manually re-enable all affected DIMMs if the server firmware version is older than UEFI v1.10. If the server firmware version is UEFI v1.10 or newer, disconnect and reconnect the server to the power source and restart the server.
8. (Trained technician only) Replace the affected microprocessor.

**806f010c-2018ffff Uncorrectable error detected for [PhysicalMemoryElementName] on Subsystem [MemoryElementName]. (DIMM 24)**

**Explanation:** This message is for the use case when an implementation has detected a Memory uncorrectable error.

May also be shown as 806f010c2018ffff or 0x806f010c2018ffff

**Severity:** Error

**Alert Category:** Critical - Memory

**Serviceable:** Yes

**CIM Information:** **Prefix:** PLAT and **ID:** 0138

**SNMP Trap ID:** 41

**Automatically notify Support:** Yes

**User response:**

1. Check the IBM support website for an applicable retain tip or firmware update that applies to this memory error.
2. Swap the affected DIMMs (as indicated by the error LEDs on the system board or the event logs) to a different memory channel or microprocessor.
3. If the problem follows the DIMM, replace the failing DIMM.
4. If the problem occurs on the same DIMM connector, check the DIMM connector. If the connector contains any foreign material or is damaged, replace the system board.
5. (Trained technician only) Remove the affected microprocessor and check the microprocessor socket pins for any damaged pins. If a damage is found, replace the system board.
6. (Trained technician only) Replace the affected microprocessor.
7. Manually re-enable all affected DIMMs if the server firmware version is older than UEFI v1.10. If the server firmware version is UEFI v1.10 or newer, disconnect and reconnect the server to the power source and restart the server.
8. (Trained technician only) Replace the affected microprocessor.

**806f010c-2581ffff Uncorrectable error detected for [PhysicalMemoryElementName] on Subsystem [MemoryElementName]. (All DIMMS)**

**Explanation:** This message is for the use case when an implementation has detected a Memory uncorrectable error.

May also be shown as 806f010c2581ffff or 0x806f010c2581ffff

**Severity:** Error

**Alert Category:** Critical - Memory

**Serviceable:** Yes

**CIM Information:** **Prefix:** PLAT and **ID:** 0138

**SNMP Trap ID:** 41

**Automatically notify Support:** Yes

**User response:**

1. Check the IBM support website for an applicable retain tip or firmware update that applies to this memory error.
2. Swap the affected DIMMs (as indicated by the error LEDs on the system board or the event logs) to a different memory channel or microprocessor.
3. If the problem follows the DIMM, replace the failing DIMM.
4. If the problem occurs on the same DIMM connector, check the DIMM connector. If the connector contains any foreign material or is damaged, replace the system board.
5. (Trained technician only) Remove the affected microprocessor and check the microprocessor socket pins for any damaged pins. If a damage is found, replace the system board.
6. (Trained technician only) Replace the affected microprocessor.

7. Manually re-enable all affected DIMMs if the server firmware version is older than UEFI v1.10. If the server firmware version is UEFI v1.10 or newer, disconnect and reconnect the server to the power source and restart the server.
8. (Trained technician only) Replace the affected microprocessor.

---

**806f010d-0400ffff The Drive [StorageVolumeElementName] has been disabled due to a detected fault. (Drive 0)**

**Explanation:** This message is for the use case when an implementation has detected a Drive was Disabled due to fault.

May also be shown as 806f010d0400ffff or 0x806f010d0400ffff

**Severity:** Error

**Alert Category:** Critical - Hard Disk drive

**Serviceable:** Yes

**CIM Information:** **Prefix:** PLAT and **ID:** 0164

**SNMP Trap ID:** 5

**Automatically notify Support:** Yes

**User response:**

1. Run the hard disk drive diagnostic test on drive n.
2. Reseat the following components: a. Hard disk drive (wait 1 minute or more before reinstalling the drive) b. Cable from the system board to the backplane
3. Replace the following components one at a time, in the order shown, restarting the server each time: a. Hard disk drive b. Cable from the system board to the backplane c. Hard disk drive backplane (n = hard disk drive number)

---

**806f010d-0401ffff The Drive [StorageVolumeElementName] has been disabled due to a detected fault. (Drive 1)**

**Explanation:** This message is for the use case when an implementation has detected a Drive was Disabled due to fault.

May also be shown as 806f010d0401ffff or 0x806f010d0401ffff

**Severity:** Error

**Alert Category:** Critical - Hard Disk drive

**Serviceable:** Yes

**CIM Information:** **Prefix:** PLAT and **ID:** 0164

**SNMP Trap ID:** 5

**Automatically notify Support:** Yes

**User response:**

1. Run the hard disk drive diagnostic test on drive n.
2. Reseat the following components: a. Hard disk drive (wait 1 minute or more before reinstalling the drive) b. Cable from the system board to the backplane
3. Replace the following components one at a time, in the order shown, restarting the server each time: a. Hard disk drive b. Cable from the system board to the backplane c. Hard disk drive backplane (n = hard disk drive number)

**806f010d-0402ffff The Drive [StorageVolumeElementName] has been disabled due to a detected fault. (Drive 2)**

**Explanation:** This message is for the use case when an implementation has detected a Drive was Disabled due to fault.

May also be shown as 806f010d0402ffff or 0x806f010d0402ffff

**Severity:** Error

**Alert Category:** Critical - Hard Disk drive

**Serviceable:** Yes

**CIM Information:** **Prefix:** PLAT and **ID:** 0164

**SNMP Trap ID:** 5

**Automatically notify Support:** Yes

**User response:**

1. Run the hard disk drive diagnostic test on drive n.
2. Reseat the following components: a. Hard disk drive (wait 1 minute or more before reinstalling the drive) b. Cable from the system board to the backplane
3. Replace the following components one at a time, in the order shown, restarting the server each time: a. Hard disk drive b. Cable from the system board to the backplane c. Hard disk drive backplane (n = hard disk drive number)

**806f010d-0403ffff The Drive [StorageVolumeElementName] has been disabled due to a detected fault. (Drive 3)**

**Explanation:** This message is for the use case when an implementation has detected a Drive was Disabled due to fault.

May also be shown as 806f010d0403ffff or 0x806f010d0403ffff

**Severity:** Error

**Alert Category:** Critical - Hard Disk drive

**Serviceable:** Yes

**CIM Information:** **Prefix:** PLAT and **ID:** 0164

**SNMP Trap ID:** 5

**Automatically notify Support:** Yes

**User response:**

1. Run the hard disk drive diagnostic test on drive n.
2. Reseat the following components: a. Hard disk drive (wait 1 minute or more before reinstalling the drive) b. Cable from the system board to the backplane
3. Replace the following components one at a time, in the order shown, restarting the server each time: a. Hard disk drive b. Cable from the system board to the backplane c. Hard disk drive backplane (n = hard disk drive number)

**806f010d-0404ffff The Drive [StorageVolumeElementName] has been disabled due to a detected fault. (Drive 4)**

**Explanation:** This message is for the use case when an implementation has detected a Drive was Disabled due to fault.

May also be shown as 806f010d0404ffff or 0x806f010d0404ffff

**Severity:** Error

**Alert Category:** Critical - Hard Disk drive

**Serviceable:** Yes

**CIM Information:** **Prefix:** PLAT and **ID:** 0164

**SNMP Trap ID:** 5

**Automatically notify Support:** Yes

**User response:**

1. Run the hard disk drive diagnostic test on drive n.
2. Reseat the following components: a. Hard disk drive (wait 1 minute or more before reinstalling the drive) b. Cable from the system board to the backplane
3. Replace the following components one at a time, in the order shown, restarting the server each time: a. Hard disk drive b. Cable from the system board to the backplane c. Hard disk drive backplane (n = hard disk drive number)

**806f010d-0405ffff The Drive [StorageVolumeElementName] has been disabled due to a detected fault. (Drive 5)**

**Explanation:** This message is for the use case when an implementation has detected a Drive was Disabled due to fault.

May also be shown as 806f010d0405ffff or 0x806f010d0405ffff

**Severity:** Error

**Alert Category:** Critical - Hard Disk drive

**Serviceable:** Yes

**CIM Information:** **Prefix:** PLAT and **ID:** 0164

**SNMP Trap ID:** 5

**Automatically notify Support:** Yes

**User response:**

1. Run the hard disk drive diagnostic test on drive n.
2. Reseat the following components: a. Hard disk drive (wait 1 minute or more before reinstalling the drive) b. Cable from the system board to the backplane
3. Replace the following components one at a time, in the order shown, restarting the server each time: a. Hard disk drive b. Cable from the system board to the backplane c. Hard disk drive backplane (n = hard disk drive number)

**806f010d-0406ffff The Drive [StorageVolumeElementName] has been disabled due to a detected fault. (Drive 6)**

**Explanation:** This message is for the use case when an implementation has detected a Drive was Disabled due to fault.

May also be shown as 806f010d0406ffff or 0x806f010d0406ffff

**Severity:** Error

**Alert Category:** Critical - Hard Disk drive

**Serviceable:** Yes

**CIM Information:** **Prefix:** PLAT and **ID:** 0164

**SNMP Trap ID:** 5

**Automatically notify Support:** Yes

**User response:**

1. Run the hard disk drive diagnostic test on drive n.
2. Reseat the following components: a. Hard disk drive (wait 1 minute or more before reinstalling the drive) b. Cable from the system board to the backplane
3. Replace the following components one at a time, in the order shown, restarting the server each time: a. Hard disk drive b. Cable from the system board to the backplane c. Hard disk drive backplane (n = hard disk drive number)

**806f010d-0407ffff The Drive [StorageVolumeElementName] has been disabled due to a detected fault. (Drive 7)**

**Explanation:** This message is for the use case when an implementation has detected a Drive was Disabled due to fault.

May also be shown as 806f010d0407ffff or 0x806f010d0407ffff

**Severity:** Error

**Alert Category:** Critical - Hard Disk drive

**Serviceable:** Yes

**CIM Information:** **Prefix:** PLAT and **ID:** 0164

**SNMP Trap ID:** 5

**Automatically notify Support:** Yes

**User response:**

1. Run the hard disk drive diagnostic test on drive n.
2. Reseat the following components: a. Hard disk drive (wait 1 minute or more before reinstalling the drive) b. Cable from the system board to the backplane
3. Replace the following components one at a time, in the order shown, restarting the server each time: a. Hard disk drive b. Cable from the system board to the backplane c. Hard disk drive backplane (n = hard disk drive number)

**806f010d-0408ffff The Drive [StorageVolumeElementName] has been disabled due to a detected fault. (Drive 8)**

**Explanation:** This message is for the use case when an implementation has detected a Drive was Disabled due to fault.

May also be shown as 806f010d0408ffff or 0x806f010d0408ffff

**Severity:** Error

**Alert Category:** Critical - Hard Disk drive

**Serviceable:** Yes

**CIM Information:** **Prefix:** PLAT and **ID:** 0164

**SNMP Trap ID:** 5

**Automatically notify Support:** Yes

**User response:**

1. Run the hard disk drive diagnostic test on drive n.
2. Reseat the following components: a. Hard disk drive (wait 1 minute or more before reinstalling the drive) b. Cable from the system board to the backplane
3. Replace the following components one at a time, in the order shown, restarting the server each time: a. Hard disk drive b. Cable from the system board to the backplane c. Hard disk drive backplane (n = hard disk drive number)

**806f010d-0409ffff The Drive [StorageVolumeElementName] has been disabled due to a detected fault. (Drive 9)**

**Explanation:** This message is for the use case when an implementation has detected a Drive was Disabled due to fault.

May also be shown as 806f010d0409ffff or 0x806f010d0409ffff

**Severity:** Error

**Alert Category:** Critical - Hard Disk drive

**Serviceable:** Yes

**CIM Information:** **Prefix:** PLAT and **ID:** 0164

**SNMP Trap ID:** 5

**Automatically notify Support:** Yes

**User response:**

1. Run the hard disk drive diagnostic test on drive n.
2. Reseat the following components: a. Hard disk drive (wait 1 minute or more before reinstalling the drive) b. Cable from the system board to the backplane
3. Replace the following components one at a time, in the order shown, restarting the server each time: a. Hard disk drive b. Cable from the system board to the backplane c. Hard disk drive backplane (n = hard disk drive number)

**806f010d-040affff The Drive [StorageVolumeElementName] has been disabled due to a detected fault. (Drive 10)**

**Explanation:** This message is for the use case when an implementation has detected a Drive was Disabled due to fault.

May also be shown as 806f010d040affff or 0x806f010d040affff

**Severity:** Error

**Alert Category:** Critical - Hard Disk drive

**Serviceable:** Yes

**CIM Information:** **Prefix:** PLAT and **ID:** 0164

**SNMP Trap ID:** 5

**Automatically notify Support:** Yes

**User response:**

1. Run the hard disk drive diagnostic test on drive n.
2. Reseat the following components: a. Hard disk drive (wait 1 minute or more before reinstalling the drive) b. Cable from the system board to the backplane
3. Replace the following components one at a time, in the order shown, restarting the server each time: a. Hard disk drive b. Cable from the system board to the backplane c. Hard disk drive backplane (n = hard disk drive number)

---

**806f010d-040bffff The Drive [StorageVolumeElementName] has been disabled due to a detected fault. (Drive 11)**

**Explanation:** This message is for the use case when an implementation has detected a Drive was Disabled due to fault.

May also be shown as 806f010d040bffff or 0x806f010d040bffff

**Severity:** Error

**Alert Category:** Critical - Hard Disk drive

**Serviceable:** Yes

**CIM Information:** **Prefix:** PLAT and **ID:** 0164

**SNMP Trap ID:** 5

**Automatically notify Support:** Yes

**User response:**

1. Run the hard disk drive diagnostic test on drive n.
2. Reseat the following components: a. Hard disk drive (wait 1 minute or more before reinstalling the drive) b. Cable from the system board to the backplane
3. Replace the following components one at a time, in the order shown, restarting the server each time: a. Hard disk drive b. Cable from the system board to the backplane c. Hard disk drive backplane (n = hard disk drive number)

**806f010d-040cffff The Drive [StorageVolumeElementName] has been disabled due to a detected fault. (Drive 12)**

**Explanation:** This message is for the use case when an implementation has detected a Drive was Disabled due to fault.

May also be shown as 806f010d040cffff or 0x806f010d040cffff

**Severity:** Error

**Alert Category:** Critical - Hard Disk drive

**Serviceable:** Yes

**CIM Information:** **Prefix:** PLAT and **ID:** 0164

**SNMP Trap ID:** 5

**Automatically notify Support:** Yes

**User response:**

1. Run the hard disk drive diagnostic test on drive n.
2. Reseat the following components: a. Hard disk drive (wait 1 minute or more before reinstalling the drive) b. Cable from the system board to the backplane
3. Replace the following components one at a time, in the order shown, restarting the server each time: a. Hard disk drive b. Cable from the system board to the backplane c. Hard disk drive backplane (n = hard disk drive number)

**806f010d-040dffff The Drive [StorageVolumeElementName] has been disabled due to a detected fault. (Drive 13)**

**Explanation:** This message is for the use case when an implementation has detected a Drive was Disabled due to fault.

May also be shown as 806f010d040dffff or 0x806f010d040dffff

**Severity:** Error

**Alert Category:** Critical - Hard Disk drive

**Serviceable:** Yes

**CIM Information:** **Prefix:** PLAT and **ID:** 0164

**SNMP Trap ID:** 5

**Automatically notify Support:** Yes

**User response:**

1. Run the hard disk drive diagnostic test on drive n.
2. Reseat the following components: a. Hard disk drive (wait 1 minute or more before reinstalling the drive) b. Cable from the system board to the backplane
3. Replace the following components one at a time, in the order shown, restarting the server each time: a. Hard disk drive b. Cable from the system board to the backplane c. Hard disk drive backplane (n = hard disk drive number)

**806f010d-040effff The Drive [StorageVolumeElementName] has been disabled due to a detected fault. (Drive 14)**

**Explanation:** This message is for the use case when an implementation has detected a Drive was Disabled due to fault.

May also be shown as 806f010d040effff or 0x806f010d040effff

**Severity:** Error

**Alert Category:** Critical - Hard Disk drive

**Serviceable:** Yes

**CIM Information:** **Prefix:** PLAT and **ID:** 0164

**SNMP Trap ID:** 5

**Automatically notify Support:** Yes

**User response:**

1. Run the hard disk drive diagnostic test on drive n.
2. Reseat the following components: a. Hard disk drive (wait 1 minute or more before reinstalling the drive) b. Cable from the system board to the backplane
3. Replace the following components one at a time, in the order shown, restarting the server each time: a. Hard disk drive b. Cable from the system board to the backplane c. Hard disk drive backplane (n = hard disk drive number)

**806f010d-040fffff The Drive [StorageVolumeElementName] has been disabled due to a detected fault. (Drive 15)**

**Explanation:** This message is for the use case when an implementation has detected a Drive was Disabled due to fault.

May also be shown as 806f010d040fffff or 0x806f010d040fffff

**Severity:** Error

**Alert Category:** Critical - Hard Disk drive

**Serviceable:** Yes

**CIM Information:** **Prefix:** PLAT and **ID:** 0164

**SNMP Trap ID:** 5

**Automatically notify Support:** Yes

**User response:**

1. Run the hard disk drive diagnostic test on drive n.
2. Reseat the following components: a. Hard disk drive (wait 1 minute or more before reinstalling the drive) b. Cable from the system board to the backplane
3. Replace the following components one at a time, in the order shown, restarting the server each time: a. Hard disk drive b. Cable from the system board to the backplane c. Hard disk drive backplane (n = hard disk drive number)

**806f010d-0410ffff The Drive [StorageVolumeElementName] has been disabled due to a detected fault. (Drive 16)**

**Explanation:** This message is for the use case when an implementation has detected a Drive was Disabled due to fault.

May also be shown as 806f010d0410ffff or 0x806f010d0410ffff

**Severity:** Error

**Alert Category:** Critical - Hard Disk drive

**Serviceable:** Yes

**CIM Information:** **Prefix:** PLAT and **ID:** 0164

**SNMP Trap ID:** 5

**Automatically notify Support:** Yes

**User response:**

1. Run the hard disk drive diagnostic test on drive n.
2. Reseat the following components: a. Hard disk drive (wait 1 minute or more before reinstalling the drive) b. Cable from the system board to the backplane
3. Replace the following components one at a time, in the order shown, restarting the server each time: a. Hard disk drive b. Cable from the system board to the backplane c. Hard disk drive backplane (n = hard disk drive number)

**806f010d-0411ffff The Drive [StorageVolumeElementName] has been disabled due to a detected fault. (Drive 17)**

**Explanation:** This message is for the use case when an implementation has detected a Drive was Disabled due to fault.

May also be shown as 806f010d0411ffff or 0x806f010d0411ffff

**Severity:** Error

**Alert Category:** Critical - Hard Disk drive

**Serviceable:** Yes

**CIM Information:** **Prefix:** PLAT and **ID:** 0164

**SNMP Trap ID:** 5

**Automatically notify Support:** Yes

**User response:**

1. Run the hard disk drive diagnostic test on drive n.
2. Reseat the following components: a. Hard disk drive (wait 1 minute or more before reinstalling the drive) b. Cable from the system board to the backplane
3. Replace the following components one at a time, in the order shown, restarting the server each time: a. Hard disk drive b. Cable from the system board to the backplane c. Hard disk drive backplane (n = hard disk drive number)

**806f010d-0412ffff The Drive [StorageVolumeElementName] has been disabled due to a detected fault. (Drive 18)**

**Explanation:** This message is for the use case when an implementation has detected a Drive was Disabled due to fault.

May also be shown as 806f010d0412ffff or 0x806f010d0412ffff

**Severity:** Error

**Alert Category:** Critical - Hard Disk drive

**Serviceable:** Yes

**CIM Information:** **Prefix:** PLAT and **ID:** 0164

**SNMP Trap ID:** 5

**Automatically notify Support:** Yes

**User response:**

1. Run the hard disk drive diagnostic test on drive n.
2. Reseat the following components: a. Hard disk drive (wait 1 minute or more before reinstalling the drive) b. Cable from the system board to the backplane
3. Replace the following components one at a time, in the order shown, restarting the server each time: a. Hard disk drive b. Cable from the system board to the backplane c. Hard disk drive backplane (n = hard disk drive number)

**806f010d-0413ffff The Drive [StorageVolumeElementName] has been disabled due to a detected fault. (Drive 19)**

**Explanation:** This message is for the use case when an implementation has detected a Drive was Disabled due to fault.

May also be shown as 806f010d0413ffff or 0x806f010d0413ffff

**Severity:** Error

**Alert Category:** Critical - Hard Disk drive

**Serviceable:** Yes

**CIM Information:** **Prefix:** PLAT and **ID:** 0164

**SNMP Trap ID:** 5

**Automatically notify Support:** Yes

**User response:**

1. Run the hard disk drive diagnostic test on drive n.
2. Reseat the following components: a. Hard disk drive (wait 1 minute or more before reinstalling the drive) b. Cable from the system board to the backplane
3. Replace the following components one at a time, in the order shown, restarting the server each time: a. Hard disk drive b. Cable from the system board to the backplane c. Hard disk drive backplane (n = hard disk drive number)

**806f010d-0414ffff The Drive [StorageVolumeElementName] has been disabled due to a detected fault. (Drive 20)**

**Explanation:** This message is for the use case when an implementation has detected a Drive was Disabled due to fault.

May also be shown as 806f010d0414ffff or 0x806f010d0414ffff

**Severity:** Error

**Alert Category:** Critical - Hard Disk drive

**Serviceable:** Yes

**CIM Information:** **Prefix:** PLAT and **ID:** 0164

**SNMP Trap ID:** 5

**Automatically notify Support:** Yes

**User response:**

1. Run the hard disk drive diagnostic test on drive n.
2. Reseat the following components: a. Hard disk drive (wait 1 minute or more before reinstalling the drive) b. Cable from the system board to the backplane
3. Replace the following components one at a time, in the order shown, restarting the server each time: a. Hard disk drive b. Cable from the system board to the backplane c. Hard disk drive backplane (n = hard disk drive number)

**806f010d-0415ffff The Drive [StorageVolumeElementName] has been disabled due to a detected fault. (Drive 21)**

**Explanation:** This message is for the use case when an implementation has detected a Drive was Disabled due to fault.

May also be shown as 806f010d0415ffff or 0x806f010d0415ffff

**Severity:** Error

**Alert Category:** Critical - Hard Disk drive

**Serviceable:** Yes

**CIM Information:** **Prefix:** PLAT and **ID:** 0164

**SNMP Trap ID:** 5

**Automatically notify Support:** Yes

**User response:**

1. Run the hard disk drive diagnostic test on drive n.
2. Reseat the following components: a. Hard disk drive (wait 1 minute or more before reinstalling the drive) b. Cable from the system board to the backplane
3. Replace the following components one at a time, in the order shown, restarting the server each time: a. Hard disk drive b. Cable from the system board to the backplane c. Hard disk drive backplane (n = hard disk drive number)

**806f010d-0416ffff The Drive [StorageVolumeElementName] has been disabled due to a detected fault. (Drive 22)**

**Explanation:** This message is for the use case when an implementation has detected a Drive was Disabled due to fault.

May also be shown as 806f010d0416ffff or 0x806f010d0416ffff

**Severity:** Error

**Alert Category:** Critical - Hard Disk drive

**Serviceable:** Yes

**CIM Information:** **Prefix:** PLAT and **ID:** 0164

**SNMP Trap ID:** 5

**Automatically notify Support:** Yes

**User response:**

1. Run the hard disk drive diagnostic test on drive n.
2. Reseat the following components: a. Hard disk drive (wait 1 minute or more before reinstalling the drive) b. Cable from the system board to the backplane
3. Replace the following components one at a time, in the order shown, restarting the server each time: a. Hard disk drive b. Cable from the system board to the backplane c. Hard disk drive backplane (n = hard disk drive number)

**806f010d-0417ffff The Drive [StorageVolumeElementName] has been disabled due to a detected fault. (Drive 23)**

**Explanation:** This message is for the use case when an implementation has detected a Drive was Disabled due to fault.

May also be shown as 806f010d0417ffff or 0x806f010d0417ffff

**Severity:** Error

**Alert Category:** Critical - Hard Disk drive

**Serviceable:** Yes

**CIM Information:** **Prefix:** PLAT and **ID:** 0164

**SNMP Trap ID:** 5

**Automatically notify Support:** Yes

**User response:**

1. Run the hard disk drive diagnostic test on drive n.
2. Reseat the following components: a. Hard disk drive (wait 1 minute or more before reinstalling the drive) b. Cable from the system board to the backplane
3. Replace the following components one at a time, in the order shown, restarting the server each time: a. Hard disk drive b. Cable from the system board to the backplane c. Hard disk drive backplane (n = hard disk drive number)

**806f010d-0418ffff The Drive [StorageVolumeElementName] has been disabled due to a detected fault. (Drive 24)**

**Explanation:** This message is for the use case when an implementation has detected a Drive was Disabled due to fault.

May also be shown as 806f010d0418ffff or 0x806f010d0418ffff

**Severity:** Error

**Alert Category:** Critical - Hard Disk drive

**Serviceable:** Yes

**CIM Information:** **Prefix:** PLAT and **ID:** 0164

**SNMP Trap ID:** 5

**Automatically notify Support:** Yes

**User response:**

1. Run the hard disk drive diagnostic test on drive n.
2. Reseat the following components: a. Hard disk drive (wait 1 minute or more before reinstalling the drive) b. Cable from the system board to the backplane
3. Replace the following components one at a time, in the order shown, restarting the server each time: a. Hard disk drive b. Cable from the system board to the backplane c. Hard disk drive backplane (n = hard disk drive number)

**806f010d-0419ffff The Drive [StorageVolumeElementName] has been disabled due to a detected fault. (Drive 25)**

**Explanation:** This message is for the use case when an implementation has detected a Drive was Disabled due to fault.

May also be shown as 806f010d0419ffff or 0x806f010d0419ffff

**Severity:** Error

**Alert Category:** Critical - Hard Disk drive

**Serviceable:** Yes

**CIM Information:** **Prefix:** PLAT and **ID:** 0164

**SNMP Trap ID:** 5

**Automatically notify Support:** Yes

**User response:**

1. Run the hard disk drive diagnostic test on drive n.
2. Reseat the following components: a. Hard disk drive (wait 1 minute or more before reinstalling the drive) b. Cable from the system board to the backplane
3. Replace the following components one at a time, in the order shown, restarting the server each time: a. Hard disk drive b. Cable from the system board to the backplane c. Hard disk drive backplane (n = hard disk drive number)

**806f010d-041affff The Drive [StorageVolumeElementName] has been disabled due to a detected fault. (Drive 26)**

**Explanation:** This message is for the use case when an implementation has detected a Drive was Disabled due to fault.

May also be shown as 806f010d041affff or 0x806f010d041affff

**Severity:** Error

**Alert Category:** Critical - Hard Disk drive

**Serviceable:** Yes

**CIM Information:** **Prefix:** PLAT and **ID:** 0164

**SNMP Trap ID:** 5

**Automatically notify Support:** Yes

**User response:**

1. Run the hard disk drive diagnostic test on drive n.
2. Reseat the following components: a. Hard disk drive (wait 1 minute or more before reinstalling the drive) b. Cable from the system board to the backplane
3. Replace the following components one at a time, in the order shown, restarting the server each time: a. Hard disk drive b. Cable from the system board to the backplane c. Hard disk drive backplane (n = hard disk drive number)

**806f010d-041bffff The Drive [StorageVolumeElementName] has been disabled due to a detected fault. (Drive 27)**

**Explanation:** This message is for the use case when an implementation has detected a Drive was Disabled due to fault.

May also be shown as 806f010d041bffff or 0x806f010d041bffff

**Severity:** Error

**Alert Category:** Critical - Hard Disk drive

**Serviceable:** Yes

**CIM Information:** **Prefix:** PLAT and **ID:** 0164

**SNMP Trap ID:** 5

**Automatically notify Support:** Yes

**User response:**

1. Run the hard disk drive diagnostic test on drive n.
2. Reseat the following components: a. Hard disk drive (wait 1 minute or more before reinstalling the drive) b. Cable from the system board to the backplane
3. Replace the following components one at a time, in the order shown, restarting the server each time: a. Hard disk drive b. Cable from the system board to the backplane c. Hard disk drive backplane (n = hard disk drive number)

**806f010d-041cffff The Drive [StorageVolumeElementName] has been disabled due to a detected fault. (Drive 28)**

**Explanation:** This message is for the use case when an implementation has detected a Drive was Disabled due to fault.

May also be shown as 806f010d041cffff or 0x806f010d041cffff

**Severity:** Error

**Alert Category:** Critical - Hard Disk drive

**Serviceable:** Yes

**CIM Information:** **Prefix:** PLAT and **ID:** 0164

**SNMP Trap ID:** 5

**Automatically notify Support:** Yes

**User response:**

1. Run the hard disk drive diagnostic test on drive n.
2. Reseat the following components: a. Hard disk drive (wait 1 minute or more before reinstalling the drive) b. Cable from the system board to the backplane
3. Replace the following components one at a time, in the order shown, restarting the server each time: a. Hard disk drive b. Cable from the system board to the backplane c. Hard disk drive backplane (n = hard disk drive number)

**806f010d-041dffff The Drive [StorageVolumeElementName] has been disabled due to a detected fault. (Drive 29)**

**Explanation:** This message is for the use case when an implementation has detected a Drive was Disabled due to fault.

May also be shown as 806f010d041dffff or 0x806f010d041dffff

**Severity:** Error

**Alert Category:** Critical - Hard Disk drive

**Serviceable:** Yes

**CIM Information:** **Prefix:** PLAT and **ID:** 0164

**SNMP Trap ID:** 5

**Automatically notify Support:** Yes

**User response:**

1. Run the hard disk drive diagnostic test on drive n.
2. Reseat the following components: a. Hard disk drive (wait 1 minute or more before reinstalling the drive) b. Cable from the system board to the backplane
3. Replace the following components one at a time, in the order shown, restarting the server each time: a. Hard disk drive b. Cable from the system board to the backplane c. Hard disk drive backplane (n = hard disk drive number)

**806f010d-041effff The Drive [StorageVolumeElementName] has been disabled due to a detected fault. (Drive 30)**

**Explanation:** This message is for the use case when an implementation has detected a Drive was Disabled due to fault.

May also be shown as 806f010d041effff or 0x806f010d041effff

**Severity:** Error

**Alert Category:** Critical - Hard Disk drive

**Serviceable:** Yes

**CIM Information:** **Prefix:** PLAT and **ID:** 0164

**SNMP Trap ID:** 5

**Automatically notify Support:** Yes

**User response:**

1. Run the hard disk drive diagnostic test on drive n.
2. Reseat the following components: a. Hard disk drive (wait 1 minute or more before reinstalling the drive) b. Cable from the system board to the backplane
3. Replace the following components one at a time, in the order shown, restarting the server each time: a. Hard disk drive b. Cable from the system board to the backplane c. Hard disk drive backplane (n = hard disk drive number)

**806f010d-041fffff The Drive [StorageVolumeElementName] has been disabled due to a detected fault. (Drive 31)**

**Explanation:** This message is for the use case when an implementation has detected a Drive was Disabled due to fault.

May also be shown as 806f010d041fffff or 0x806f010d041fffff

**Severity:** Error

**Alert Category:** Critical - Hard Disk drive

**Serviceable:** Yes

**CIM Information:** **Prefix:** PLAT and **ID:** 0164

**SNMP Trap ID:** 5

**Automatically notify Support:** Yes

**User response:**

1. Run the hard disk drive diagnostic test on drive n.
2. Reseat the following components: a. Hard disk drive (wait 1 minute or more before reinstalling the drive) b. Cable from the system board to the backplane
3. Replace the following components one at a time, in the order shown, restarting the server each time: a. Hard disk drive b. Cable from the system board to the backplane c. Hard disk drive backplane (n = hard disk drive number)

**806f010f-2201ffff The System [ComputerSystemElementName] encountered a firmware hang. (Firmware Error)**

**Explanation:** This message is for the use case when an implementation has detected a System Firmware Hang.

May also be shown as 806f010f2201ffff or 0x806f010f2201ffff

**Severity:** Error

**Alert Category:** System - Boot failure

**Serviceable:** Yes

**CIM Information:** **Prefix:** PLAT and **ID:** 0186

**SNMP Trap ID:** 25

**Automatically notify Support:** No

**User response:**

1. Make sure the server meets the minimum configuration to start (see Power-supply LEDs).
2. Update the server firmware on the primary page. Important: Some cluster solutions require specific code levels or coordinated code updates. If the device is part of a cluster solution, verify that the latest level of code is supported for the cluster solution before you update the code.
3. (Trained technician only) Replace the system board.

---

**806f0113-0301ffff A bus timeout has occurred on system [ComputerSystemElementName]. (CPU 1 PECI)**

**Explanation:** This message is for the use case when an implementation has detected a Bus Timeout.

May also be shown as 806f01130301ffff or 0x806f01130301ffff

**Severity:** Error

**Alert Category:** Critical - Other

**Serviceable:** Yes

**CIM Information:** **Prefix:** PLAT and **ID:** 0224

**SNMP Trap ID:** 50

**Automatically notify Support:** No

**User response:**

1. Reseat the microprocessor, and then restart the server.
2. Replace microprocessor n. (n = microprocessor number)

---

**806f0113-0302ffff A bus timeout has occurred on system [ComputerSystemElementName]. (CPU 2 PECI)**

**Explanation:** This message is for the use case when an implementation has detected a Bus Timeout.

May also be shown as 806f01130302ffff or 0x806f01130302ffff

**Severity:** Error

**Alert Category:** Critical - Other

**Serviceable:** Yes

**CIM Information:** **Prefix:** PLAT and **ID:** 0224

**SNMP Trap ID:** 50

**Automatically notify Support:** No

**User response:**

1. Reseat the microprocessor, and then restart the server.
2. Replace microprocessor n. (n = microprocessor number)

**806f011b-0701ffff The connector [PhysicalConnectorElementName] has encountered a configuration error. (Front USB)**

**Explanation:** This message is for the use case when an implementation has detected an Interconnect Configuration Error.

May also be shown as 806f011b0701ffff or 0x806f011b0701ffff

**Severity:** Error

**Alert Category:** Critical - Other

**Serviceable:** Yes

**CIM Information:** **Prefix:** PLAT and **ID:** 0266

**SNMP Trap ID:** 50

**Automatically notify Support:** Yes

**User response:** If the specified sensor is front USB connector, reset the front USB cable on the system board. If the specified sensor is front video connector, reset the front video cable in the system board. If the specified sensor is PwrPaddle cable, complete the following steps until problem is solved:

1. Reseat the power paddle cable on the system board.
2. Replace the power paddle cable.
3. (Trained technician only) Replace the supercap n. (n = supercap number)
4. (Trained technician only) Replace the system board.

Front Video :

**806f011b-0c01ffff The connector [PhysicalConnectorElementName] has encountered a configuration error. (FP LCD Cable)**

**Explanation:** This message is for the use case when an implementation has detected an Interconnect Configuration Error.

May also be shown as 806f011b0c01ffff or 0x806f011b0c01ffff

**Severity:** Error

**Alert Category:** Critical - Other

**Serviceable:** Yes

**CIM Information:** **Prefix:** PLAT and **ID:** 0266

**SNMP Trap ID:** 50

**Automatically notify Support:** Yes

**User response:**

1. Check system event log is showing LCD cable sensor has deasserted.
2. Reseat LCD cable on the system board.
3. Reset LCD cable on LCD panel.
4. Replace LCD cable.

**806f011b-2502ffff The connector [PhysicalConnectorElementName] has encountered a configuration error. (nvDIMM 02 Cable)**

**Explanation:** This message is for the use case when an implementation has detected an Interconnect Configuration Error.

May also be shown as 806f011b2502ffff or 0x806f011b2502ffff

**Severity:** Error

**Alert Category:** Critical - Other

**Serviceable:** Yes

**CIM Information:** **Prefix:** PLAT and **ID:** 0266

**SNMP Trap ID:** 50

**Automatically notify Support:** Yes

**User response:** If the specified sensor is front USB connector, reset the front USB cable on the system board. If the specified sensor is front video connector, reset the front video cable in the system board. If the specified sensor is PwrPaddle cable, complete the following steps until problem is solved:

1. Reseat the power paddle cable on the system board.
2. Replace the power paddle cable.
3. (Trained technician only) Replace the supercap n. (n = supercap number)
4. (Trained technician only) Replace the system board.

**806f011b-2505ffff The connector [PhysicalConnectorElementName] has encountered a configuration error. (nvDIMM 05 Cable)**

**Explanation:** This message is for the use case when an implementation has detected an Interconnect Configuration Error.

May also be shown as 806f011b2505ffff or 0x806f011b2505ffff

**Severity:** Error

**Alert Category:** Critical - Other

**Serviceable:** Yes

**CIM Information:** **Prefix:** PLAT and **ID:** 0266

**SNMP Trap ID:** 50

**Automatically notify Support:** Yes

**User response:** If the specified sensor is front USB connector, reset the front USB cable on the system board. If the specified sensor is front video connector, reset the front video cable in the system board. If the specified sensor is PwrPaddle cable, complete the following steps until problem is solved:

1. Reseat the power paddle cable on the system board.
2. Replace the power paddle cable.
3. (Trained technician only) Replace the supercap n. (n = supercap number)
4. (Trained technician only) Replace the system board.

**806f011b-2508ffff The connector [PhysicalConnectorElementName] has encountered a configuration error. (nvDIMM 08 Cable)**

**Explanation:** This message is for the use case when an implementation has detected an Interconnect Configuration Error.

May also be shown as 806f011b2508ffff or 0x806f011b2508ffff

**Severity:** Error

**Alert Category:** Critical - Other

**Serviceable:** Yes

**CIM Information:** **Prefix:** PLAT and **ID:** 0266

**SNMP Trap ID:** 50

**Automatically notify Support:** Yes

**User response:** If the specified sensor is front USB connector, reset the front USB cable on the system board. If the specified sensor is front video connector, reset the front video cable in the system board. If the specified sensor is PwrPaddle cable, complete the following steps until problem is solved:

1. Reseat the power paddle cable on the system board.
2. Replace the power paddle cable.
3. (Trained technician only) Replace the supercap n. (n = supercap number)
4. (Trained technician only) Replace the system board.

**806f011b-250bffff The connector [PhysicalConnectorElementName] has encountered a configuration error. (nvDIMM 11 Cable)**

**Explanation:** This message is for the use case when an implementation has detected an Interconnect Configuration Error.

May also be shown as 806f011b250bffff or 0x806f011b250bffff

**Severity:** Error

**Alert Category:** Critical - Other

**Serviceable:** Yes

**CIM Information:** **Prefix:** PLAT and **ID:** 0266

**SNMP Trap ID:** 50

**Automatically notify Support:** Yes

**User response:** If the specified sensor is front USB connector, reset the front USB cable on the system board. If the specified sensor is front video connector, reset the front video cable in the system board. If the specified sensor is PwrPaddle cable, complete the following steps until problem is solved:

1. Reseat the power paddle cable on the system board.
2. Replace the power paddle cable.
3. (Trained technician only) Replace the supercap n. (n = supercap number)
4. (Trained technician only) Replace the system board.

**806f0123-2101ffff Reboot of system [ComputerSystemElementName] initiated by [WatchdogElementName]. (IPMI Watchdog)**

**Explanation:** This message is for the use case when an implementation has detected a Reboot by a Watchdog occurred.

May also be shown as 806f01232101ffff or 0x806f01232101ffff

**Severity:** Info

**Alert Category:** System - Other

**Serviceable:** No

**CIM Information:** **Prefix:** PLAT and **ID:** 0370

**SNMP Trap ID:**

**Automatically notify Support:** No

**User response:** No action; information only.

---

**806f0125-0c01ffff [ManagedElementName] detected as absent. (Front Panel)**

**Explanation:** This message is for the use case when an implementation has detected a Managed Element is Absent.

May also be shown as 806f01250c01ffff or 0x806f01250c01ffff

**Severity:** Info

**Alert Category:** System - Other

**Serviceable:** No

**CIM Information:** **Prefix:** PLAT and **ID:** 0392

**SNMP Trap ID:**

**Automatically notify Support:** No

**User response:** No action; information only.

---

**806f0125-1001ffff [ManagedElementName] detected as absent. (PCI Riser 1)**

**Explanation:** This message is for the use case when an implementation has detected a Managed Element is Absent.

May also be shown as 806f01251001ffff or 0x806f01251001ffff

**Severity:** Info

**Alert Category:** System - Other

**Serviceable:** No

**CIM Information:** **Prefix:** PLAT and **ID:** 0392

**SNMP Trap ID:**

**Automatically notify Support:** No

**User response:** No action; information only.

**806f0125-1002ffff [ManagedElementName] detected as absent. (PCI Riser 2)**

**Explanation:** This message is for the use case when an implementation has detected a Managed Element is Absent. May also be shown as 806f01251002ffff or 0x806f01251002ffff

**Severity:** Info

**Alert Category:** System - Other

**Serviceable:** No

**CIM Information:** **Prefix:** PLAT and **ID:** 0392

**SNMP Trap ID:**

**Automatically notify Support:** No

**User response:** No action; information only.

---

**806f0125-100bffff [ManagedElementName] detected as absent. (PDB Card)**

**Explanation:** This message is for the use case when an implementation has detected a Managed Element is Absent. May also be shown as 806f0125100bffff or 0x806f0125100bffff

**Severity:** Info

**Alert Category:** System - Other

**Serviceable:** No

**CIM Information:** **Prefix:** PLAT and **ID:** 0392

**SNMP Trap ID:**

**Automatically notify Support:** No

**User response:** Please ensure the PCI riser 1 has been installed correctly.

---

**806f0125-2c01ffff [ManagedElementName] detected as absent. (ML2 Card)**

**Explanation:** This message is for the use case when an implementation has detected a Managed Element is Absent. May also be shown as 806f01252c01ffff or 0x806f01252c01ffff

**Severity:** Info

**Alert Category:** System - Other

**Serviceable:** No

**CIM Information:** **Prefix:** PLAT and **ID:** 0392

**SNMP Trap ID:**

**Automatically notify Support:** No

**User response:** Ensure PCI riser 1 and ML2 card are installed correctly.

**806f0207-0301ffff [ProcessorElementName] has Failed with FRB1/BIST condition. (CPU 1)**

**Explanation:** This message is for the use case when an implementation has detected a Processor Failed - FRB1/BIST condition.

May also be shown as 806f02070301ffff or 0x806f02070301ffff

**Severity:** Error

**Alert Category:** Critical - CPU

**Serviceable:** Yes

**CIM Information:** **Prefix:** PLAT and **ID:** 0044

**SNMP Trap ID:** 40

**Automatically notify Support:** Yes

**User response:**

1. Make sure that the latest levels of firmware and device drivers are installed for all adapters and standard devices such as Ethernet and storage adapters. Important: Some cluster solutions require specific code levels or coordinated code updates. If the device is part of a cluster solution, verify that the latest level of code is supported for the cluster solution before you update the code.
2. Update the firmware (UEFI and IMM) to the latest level (Updating the firmware).
3. Run the DSA program.
4. Remove the adapter to see if the problem is follwed adapter. if not, replace the adapter.
5. (Trained technician only) Replace microprocessor n.
6. (Trained technician only) Replace the system board. (n = microprocessor number)

**806f0207-0302ffff [ProcessorElementName] has Failed with FRB1/BIST condition. (CPU 2)**

**Explanation:** This message is for the use case when an implementation has detected a Processor Failed - FRB1/BIST condition.

May also be shown as 806f02070302ffff or 0x806f02070302ffff

**Severity:** Error

**Alert Category:** Critical - CPU

**Serviceable:** Yes

**CIM Information:** **Prefix:** PLAT and **ID:** 0044

**SNMP Trap ID:** 40

**Automatically notify Support:** Yes

**User response:**

1. Make sure that the latest levels of firmware and device drivers are installed for all adapters and standard devices such as Ethernet and storage adapters. Important: Some cluster solutions require specific code levels or coordinated code updates. If the device is part of a cluster solution, verify that the latest level of code is supported for the cluster solution before you update the code.
2. Update the firmware (UEFI and IMM) to the latest level (Updating the firmware).
3. Run the DSA program.
4. Remove the adapter to see if the problem is follwed adapter. if not, replace the adapter.
5. (Trained technician only) Replace microprocessor n.
6. (Trained technician only) Replace the system board. (n = microprocessor number)

**806f0207-2584ffff [ProcessorElementName] has Failed with FRB1/BIST condition. (All CPUs)**

**Explanation:** This message is for the use case when an implementation has detected a Processor Failed - FRB1/BIST condition.

May also be shown as 806f02072584ffff or 0x806f02072584ffff

**Severity:** Error

**Alert Category:** Critical - CPU

**Serviceable:** Yes

**CIM Information:** **Prefix:** PLAT and **ID:** 0044

**SNMP Trap ID:** 40

**Automatically notify Support:** Yes

**User response:**

1. Make sure that the latest levels of firmware and device drivers are installed for all adapters and standard devices such as Ethernet and storage adapters. Important: Some cluster solutions require specific code levels or coordinated code updates. If the device is part of a cluster solution, verify that the latest level of code is supported for the cluster solution before you update the code.
2. Update the firmware (UEFI and IMM) to the latest level (Updating the firmware).
3. Run the DSA program.
4. Remove the adapter to see if the problem is follwed adapter. if not, replace the adapter.
5. (Trained technician only) Replace microprocessor n.
6. (Trained technician only) Replace the system board. (n = microprocessor number)

**806f020d-0400ffff Failure Predicted on drive [StorageVolumeElementName] for array [ComputerSystemElementName]. (Drive 0)**

**Explanation:** This message is for the use case when an implementation has detected an Array Failure is Predicted.

May also be shown as 806f020d0400ffff or 0x806f020d0400ffff

**Severity:** Warning

**Alert Category:** System - Predicted Failure

**Serviceable:** Yes

**CIM Information:** **Prefix:** PLAT and **ID:** 0168

**SNMP Trap ID:** 27

**Automatically notify Support:** Yes

**User response:**

1. Run the hard disk drive diagnostic test on drive n.
2. Reseat the following components: a. Hard disk drive b. Cable from the system board to the backplane.
3. Replace the following components one at a time, in the order shown, restarting the server each time: a. Hard disk drive. b. Cable from the system board to the backplane. c. Hard disk drive backplane. (n = hard disk drive number)

**806f020d-0401ffff Failure Predicted on drive [StorageVolumeElementName] for array [ComputerSystemElementName]. (Drive 1)**

**Explanation:** This message is for the use case when an implementation has detected an Array Failure is Predicted.

May also be shown as 806f020d0401ffff or 0x806f020d0401ffff

**Severity:** Warning

**Alert Category:** System - Predicted Failure

**Serviceable:** Yes

**CIM Information:** **Prefix:** PLAT and **ID:** 0168

**SNMP Trap ID:** 27

**Automatically notify Support:** Yes

**User response:**

1. Run the hard disk drive diagnostic test on drive n.
2. Reseat the following components: a. Hard disk drive b. Cable from the system board to the backplane.
3. Replace the following components one at a time, in the order shown, restarting the server each time: a. Hard disk drive. b. Cable from the system board to the backplane. c. Hard disk drive backplane. (n = hard disk drive number)

**806f020d-0402ffff Failure Predicted on drive [StorageVolumeElementName] for array [ComputerSystemElementName]. (Drive 2)**

**Explanation:** This message is for the use case when an implementation has detected an Array Failure is Predicted.

May also be shown as 806f020d0402ffff or 0x806f020d0402ffff

**Severity:** Warning

**Alert Category:** System - Predicted Failure

**Serviceable:** Yes

**CIM Information:** **Prefix:** PLAT and **ID:** 0168

**SNMP Trap ID:** 27

**Automatically notify Support:** Yes

**User response:**

1. Run the hard disk drive diagnostic test on drive n.
2. Reseat the following components: a. Hard disk drive b. Cable from the system board to the backplane.
3. Replace the following components one at a time, in the order shown, restarting the server each time: a. Hard disk drive. b. Cable from the system board to the backplane. c. Hard disk drive backplane. (n = hard disk drive number)

**806f020d-0403ffff Failure Predicted on drive [StorageVolumeElementName] for array [ComputerSystemElementName]. (Drive 3)**

**Explanation:** This message is for the use case when an implementation has detected an Array Failure is Predicted.

May also be shown as 806f020d0403ffff or 0x806f020d0403ffff

**Severity:** Warning

**Alert Category:** System - Predicted Failure

**Serviceable:** Yes

**CIM Information:** **Prefix:** PLAT and **ID:** 0168

**SNMP Trap ID:** 27

**Automatically notify Support:** Yes

**User response:**

1. Run the hard disk drive diagnostic test on drive n.
2. Reseat the following components: a. Hard disk drive b. Cable from the system board to the backplane.
3. Replace the following components one at a time, in the order shown, restarting the server each time: a. Hard disk drive. b. Cable from the system board to the backplane. c. Hard disk drive backplane. (n = hard disk drive number)

**806f020d-0404ffff Failure Predicted on drive [StorageVolumeElementName] for array [ComputerSystemElementName]. (Drive 4)**

**Explanation:** This message is for the use case when an implementation has detected an Array Failure is Predicted.

May also be shown as 806f020d0404ffff or 0x806f020d0404ffff

**Severity:** Warning

**Alert Category:** System - Predicted Failure

**Serviceable:** Yes

**CIM Information:** **Prefix:** PLAT and **ID:** 0168

**SNMP Trap ID:** 27

**Automatically notify Support:** Yes

**User response:**

1. Run the hard disk drive diagnostic test on drive n.
2. Reseat the following components: a. Hard disk drive b. Cable from the system board to the backplane.
3. Replace the following components one at a time, in the order shown, restarting the server each time: a. Hard disk drive. b. Cable from the system board to the backplane. c. Hard disk drive backplane. (n = hard disk drive number)

**806f020d-0405ffff Failure Predicted on drive [StorageVolumeElementName] for array [ComputerSystemElementName]. (Drive 5)**

**Explanation:** This message is for the use case when an implementation has detected an Array Failure is Predicted.

May also be shown as 806f020d0405ffff or 0x806f020d0405ffff

**Severity:** Warning

**Alert Category:** System - Predicted Failure

**Serviceable:** Yes

**CIM Information:** **Prefix:** PLAT and **ID:** 0168

**SNMP Trap ID:** 27

**Automatically notify Support:** Yes

**User response:**

1. Run the hard disk drive diagnostic test on drive n.
2. Reseat the following components: a. Hard disk drive b. Cable from the system board to the backplane.
3. Replace the following components one at a time, in the order shown, restarting the server each time: a. Hard disk drive. b. Cable from the system board to the backplane. c. Hard disk drive backplane. (n = hard disk drive number)

**806f020d-0406ffff Failure Predicted on drive [StorageVolumeElementName] for array [ComputerSystemElementName]. (Drive 6)**

**Explanation:** This message is for the use case when an implementation has detected an Array Failure is Predicted.

May also be shown as 806f020d0406ffff or 0x806f020d0406ffff

**Severity:** Warning

**Alert Category:** System - Predicted Failure

**Serviceable:** Yes

**CIM Information:** **Prefix:** PLAT and **ID:** 0168

**SNMP Trap ID:** 27

**Automatically notify Support:** Yes

**User response:**

1. Run the hard disk drive diagnostic test on drive n.
2. Reseat the following components: a. Hard disk drive b. Cable from the system board to the backplane.
3. Replace the following components one at a time, in the order shown, restarting the server each time: a. Hard disk drive. b. Cable from the system board to the backplane. c. Hard disk drive backplane. (n = hard disk drive number)

**806f020d-0407ffff Failure Predicted on drive [StorageVolumeElementName] for array [ComputerSystemElementName]. (Drive 7)**

**Explanation:** This message is for the use case when an implementation has detected an Array Failure is Predicted.

May also be shown as 806f020d0407ffff or 0x806f020d0407ffff

**Severity:** Warning

**Alert Category:** System - Predicted Failure

**Serviceable:** Yes

**CIM Information:** **Prefix:** PLAT and **ID:** 0168

**SNMP Trap ID:** 27

**Automatically notify Support:** Yes

**User response:**

1. Run the hard disk drive diagnostic test on drive n.
2. Reseat the following components: a. Hard disk drive b. Cable from the system board to the backplane.
3. Replace the following components one at a time, in the order shown, restarting the server each time: a. Hard disk drive. b. Cable from the system board to the backplane. c. Hard disk drive backplane. (n = hard disk drive number)

**806f020d-0408ffff Failure Predicted on drive [StorageVolumeElementName] for array [ComputerSystemElementName]. (Drive 8)**

**Explanation:** This message is for the use case when an implementation has detected an Array Failure is Predicted.

May also be shown as 806f020d0408ffff or 0x806f020d0408ffff

**Severity:** Warning

**Alert Category:** System - Predicted Failure

**Serviceable:** Yes

**CIM Information:** **Prefix:** PLAT and **ID:** 0168

**SNMP Trap ID:** 27

**Automatically notify Support:** Yes

**User response:**

1. Run the hard disk drive diagnostic test on drive n.
2. Reseat the following components: a. Hard disk drive b. Cable from the system board to the backplane.
3. Replace the following components one at a time, in the order shown, restarting the server each time: a. Hard disk drive. b. Cable from the system board to the backplane. c. Hard disk drive backplane. (n = hard disk drive number)

**806f020d-0409ffff Failure Predicted on drive [StorageVolumeElementName] for array [ComputerSystemElementName]. (Drive 9)**

**Explanation:** This message is for the use case when an implementation has detected an Array Failure is Predicted.

May also be shown as 806f020d0409ffff or 0x806f020d0409ffff

**Severity:** Warning

**Alert Category:** System - Predicted Failure

**Serviceable:** Yes

**CIM Information:** **Prefix:** PLAT and **ID:** 0168

**SNMP Trap ID:** 27

**Automatically notify Support:** Yes

**User response:**

1. Run the hard disk drive diagnostic test on drive n.
2. Reseat the following components: a. Hard disk drive b. Cable from the system board to the backplane.
3. Replace the following components one at a time, in the order shown, restarting the server each time: a. Hard disk drive. b. Cable from the system board to the backplane. c. Hard disk drive backplane. (n = hard disk drive number)

**806f020d-040affff Failure Predicted on drive [StorageVolumeElementName] for array [ComputerSystemElementName]. (Drive 10)**

**Explanation:** This message is for the use case when an implementation has detected an Array Failure is Predicted.

May also be shown as 806f020d040affff or 0x806f020d040affff

**Severity:** Warning

**Alert Category:** System - Predicted Failure

**Serviceable:** Yes

**CIM Information:** **Prefix:** PLAT and **ID:** 0168

**SNMP Trap ID:** 27

**Automatically notify Support:** Yes

**User response:**

1. Run the hard disk drive diagnostic test on drive n.
2. Reseat the following components: a. Hard disk drive b. Cable from the system board to the backplane.
3. Replace the following components one at a time, in the order shown, restarting the server each time: a. Hard disk drive. b. Cable from the system board to the backplane. c. Hard disk drive backplane. (n = hard disk drive number)

**806f020d-040bffff Failure Predicted on drive [StorageVolumeElementName] for array [ComputerSystemElementName]. (Drive 11)**

**Explanation:** This message is for the use case when an implementation has detected an Array Failure is Predicted.

May also be shown as 806f020d040bffff or 0x806f020d040bffff

**Severity:** Warning

**Alert Category:** System - Predicted Failure

**Serviceable:** Yes

**CIM Information:** **Prefix:** PLAT and **ID:** 0168

**SNMP Trap ID:** 27

**Automatically notify Support:** Yes

**User response:**

1. Run the hard disk drive diagnostic test on drive n.
2. Reseat the following components: a. Hard disk drive b. Cable from the system board to the backplane.
3. Replace the following components one at a time, in the order shown, restarting the server each time: a. Hard disk drive. b. Cable from the system board to the backplane. c. Hard disk drive backplane. (n = hard disk drive number)

---

**806f020d-040cffff Failure Predicted on drive [StorageVolumeElementName] for array [ComputerSystemElementName]. (Drive 12)**

**Explanation:** This message is for the use case when an implementation has detected an Array Failure is Predicted.

May also be shown as 806f020d040cffff or 0x806f020d040cffff

**Severity:** Warning

**Alert Category:** System - Predicted Failure

**Serviceable:** Yes

**CIM Information:** **Prefix:** PLAT and **ID:** 0168

**SNMP Trap ID:** 27

**Automatically notify Support:** Yes

**User response:**

1. Run the hard disk drive diagnostic test on drive n.
2. Reseat the following components: a. Hard disk drive b. Cable from the system board to the backplane.
3. Replace the following components one at a time, in the order shown, restarting the server each time: a. Hard disk drive. b. Cable from the system board to the backplane. c. Hard disk drive backplane. (n = hard disk drive number)

**806f020d-040dffff Failure Predicted on drive [StorageVolumeElementName] for array [ComputerSystemElementName]. (Drive 13)**

**Explanation:** This message is for the use case when an implementation has detected an Array Failure is Predicted.

May also be shown as 806f020d040dffff or 0x806f020d040dffff

**Severity:** Warning

**Alert Category:** System - Predicted Failure

**Serviceable:** Yes

**CIM Information:** **Prefix:** PLAT and **ID:** 0168

**SNMP Trap ID:** 27

**Automatically notify Support:** Yes

**User response:**

1. Run the hard disk drive diagnostic test on drive n.
2. Reseat the following components: a. Hard disk drive b. Cable from the system board to the backplane.
3. Replace the following components one at a time, in the order shown, restarting the server each time: a. Hard disk drive. b. Cable from the system board to the backplane. c. Hard disk drive backplane. (n = hard disk drive number)

---

**806f020d-040effff Failure Predicted on drive [StorageVolumeElementName] for array [ComputerSystemElementName]. (Drive 14)**

**Explanation:** This message is for the use case when an implementation has detected an Array Failure is Predicted.

May also be shown as 806f020d040effff or 0x806f020d040effff

**Severity:** Warning

**Alert Category:** System - Predicted Failure

**Serviceable:** Yes

**CIM Information:** **Prefix:** PLAT and **ID:** 0168

**SNMP Trap ID:** 27

**Automatically notify Support:** Yes

**User response:**

1. Run the hard disk drive diagnostic test on drive n.
2. Reseat the following components: a. Hard disk drive b. Cable from the system board to the backplane.
3. Replace the following components one at a time, in the order shown, restarting the server each time: a. Hard disk drive. b. Cable from the system board to the backplane. c. Hard disk drive backplane. (n = hard disk drive number)

**806f020d-040fffff Failure Predicted on drive [StorageVolumeElementName] for array [ComputerSystemElementName]. (Drive 15)**

**Explanation:** This message is for the use case when an implementation has detected an Array Failure is Predicted.

May also be shown as 806f020d040fffff or 0x806f020d040fffff

**Severity:** Warning

**Alert Category:** System - Predicted Failure

**Serviceable:** Yes

**CIM Information:** **Prefix:** PLAT and **ID:** 0168

**SNMP Trap ID:** 27

**Automatically notify Support:** Yes

**User response:**

1. Run the hard disk drive diagnostic test on drive n.
2. Reseat the following components: a. Hard disk drive b. Cable from the system board to the backplane.
3. Replace the following components one at a time, in the order shown, restarting the server each time: a. Hard disk drive. b. Cable from the system board to the backplane. c. Hard disk drive backplane. (n = hard disk drive number)

---

**806f020d-0410ffff Failure Predicted on drive [StorageVolumeElementName] for array [ComputerSystemElementName]. (Drive 16)**

**Explanation:** This message is for the use case when an implementation has detected an Array Failure is Predicted.

May also be shown as 806f020d0410ffff or 0x806f020d0410ffff

**Severity:** Warning

**Alert Category:** System - Predicted Failure

**Serviceable:** Yes

**CIM Information:** **Prefix:** PLAT and **ID:** 0168

**SNMP Trap ID:** 27

**Automatically notify Support:** Yes

**User response:**

1. Run the hard disk drive diagnostic test on drive n.
2. Reseat the following components: a. Hard disk drive b. Cable from the system board to the backplane.
3. Replace the following components one at a time, in the order shown, restarting the server each time: a. Hard disk drive. b. Cable from the system board to the backplane. c. Hard disk drive backplane. (n = hard disk drive number)

**806f020d-0411ffff Failure Predicted on drive [StorageVolumeElementName] for array [ComputerSystemElementName]. (Drive 17)**

**Explanation:** This message is for the use case when an implementation has detected an Array Failure is Predicted.

May also be shown as 806f020d0411ffff or 0x806f020d0411ffff

**Severity:** Warning

**Alert Category:** System - Predicted Failure

**Serviceable:** Yes

**CIM Information:** **Prefix:** PLAT and **ID:** 0168

**SNMP Trap ID:** 27

**Automatically notify Support:** Yes

**User response:**

1. Run the hard disk drive diagnostic test on drive n.
2. Reseat the following components: a. Hard disk drive b. Cable from the system board to the backplane.
3. Replace the following components one at a time, in the order shown, restarting the server each time: a. Hard disk drive. b. Cable from the system board to the backplane. c. Hard disk drive backplane. (n = hard disk drive number)

**806f020d-0412ffff Failure Predicted on drive [StorageVolumeElementName] for array [ComputerSystemElementName]. (Drive 18)**

**Explanation:** This message is for the use case when an implementation has detected an Array Failure is Predicted.

May also be shown as 806f020d0412ffff or 0x806f020d0412ffff

**Severity:** Warning

**Alert Category:** System - Predicted Failure

**Serviceable:** Yes

**CIM Information:** **Prefix:** PLAT and **ID:** 0168

**SNMP Trap ID:** 27

**Automatically notify Support:** Yes

**User response:**

1. Run the hard disk drive diagnostic test on drive n.
2. Reseat the following components: a. Hard disk drive b. Cable from the system board to the backplane.
3. Replace the following components one at a time, in the order shown, restarting the server each time: a. Hard disk drive. b. Cable from the system board to the backplane. c. Hard disk drive backplane. (n = hard disk drive number)

**806f020d-0413ffff Failure Predicted on drive [StorageVolumeElementName] for array [ComputerSystemElementName]. (Drive 19)**

**Explanation:** This message is for the use case when an implementation has detected an Array Failure is Predicted.

May also be shown as 806f020d0413ffff or 0x806f020d0413ffff

**Severity:** Warning

**Alert Category:** System - Predicted Failure

**Serviceable:** Yes

**CIM Information:** **Prefix:** PLAT and **ID:** 0168

**SNMP Trap ID:** 27

**Automatically notify Support:** Yes

**User response:**

1. Run the hard disk drive diagnostic test on drive n.
2. Reseat the following components: a. Hard disk drive b. Cable from the system board to the backplane.
3. Replace the following components one at a time, in the order shown, restarting the server each time: a. Hard disk drive. b. Cable from the system board to the backplane. c. Hard disk drive backplane. (n = hard disk drive number)

**806f020d-0414ffff Failure Predicted on drive [StorageVolumeElementName] for array [ComputerSystemElementName]. (Drive 20)**

**Explanation:** This message is for the use case when an implementation has detected an Array Failure is Predicted.

May also be shown as 806f020d0414ffff or 0x806f020d0414ffff

**Severity:** Warning

**Alert Category:** System - Predicted Failure

**Serviceable:** Yes

**CIM Information:** **Prefix:** PLAT and **ID:** 0168

**SNMP Trap ID:** 27

**Automatically notify Support:** Yes

**User response:**

1. Run the hard disk drive diagnostic test on drive n.
2. Reseat the following components: a. Hard disk drive b. Cable from the system board to the backplane.
3. Replace the following components one at a time, in the order shown, restarting the server each time: a. Hard disk drive. b. Cable from the system board to the backplane. c. Hard disk drive backplane. (n = hard disk drive number)

**806f020d-0415ffff Failure Predicted on drive [StorageVolumeElementName] for array [ComputerSystemElementName]. (Drive 21)**

**Explanation:** This message is for the use case when an implementation has detected an Array Failure is Predicted.

May also be shown as 806f020d0415ffff or 0x806f020d0415ffff

**Severity:** Warning

**Alert Category:** System - Predicted Failure

**Serviceable:** Yes

**CIM Information:** **Prefix:** PLAT and **ID:** 0168

**SNMP Trap ID:** 27

**Automatically notify Support:** Yes

**User response:**

1. Run the hard disk drive diagnostic test on drive n.
2. Reseat the following components: a. Hard disk drive b. Cable from the system board to the backplane.
3. Replace the following components one at a time, in the order shown, restarting the server each time: a. Hard disk drive. b. Cable from the system board to the backplane. c. Hard disk drive backplane. (n = hard disk drive number)

**806f020d-0416ffff Failure Predicted on drive [StorageVolumeElementName] for array [ComputerSystemElementName]. (Drive 22)**

**Explanation:** This message is for the use case when an implementation has detected an Array Failure is Predicted.

May also be shown as 806f020d0416ffff or 0x806f020d0416ffff

**Severity:** Warning

**Alert Category:** System - Predicted Failure

**Serviceable:** Yes

**CIM Information:** **Prefix:** PLAT and **ID:** 0168

**SNMP Trap ID:** 27

**Automatically notify Support:** Yes

**User response:**

1. Run the hard disk drive diagnostic test on drive n.
2. Reseat the following components: a. Hard disk drive b. Cable from the system board to the backplane.
3. Replace the following components one at a time, in the order shown, restarting the server each time: a. Hard disk drive. b. Cable from the system board to the backplane. c. Hard disk drive backplane. (n = hard disk drive number)

**806f020d-0417ffff Failure Predicted on drive [StorageVolumeElementName] for array [ComputerSystemElementName]. (Drive 23)**

**Explanation:** This message is for the use case when an implementation has detected an Array Failure is Predicted.

May also be shown as 806f020d0417ffff or 0x806f020d0417ffff

**Severity:** Warning

**Alert Category:** System - Predicted Failure

**Serviceable:** Yes

**CIM Information:** **Prefix:** PLAT and **ID:** 0168

**SNMP Trap ID:** 27

**Automatically notify Support:** Yes

**User response:**

1. Run the hard disk drive diagnostic test on drive n.
2. Reseat the following components: a. Hard disk drive b. Cable from the system board to the backplane.
3. Replace the following components one at a time, in the order shown, restarting the server each time: a. Hard disk drive. b. Cable from the system board to the backplane. c. Hard disk drive backplane. (n = hard disk drive number)

**806f020d-0418ffff Failure Predicted on drive [StorageVolumeElementName] for array [ComputerSystemElementName]. (Drive 24)**

**Explanation:** This message is for the use case when an implementation has detected an Array Failure is Predicted.

May also be shown as 806f020d0418ffff or 0x806f020d0418ffff

**Severity:** Warning

**Alert Category:** System - Predicted Failure

**Serviceable:** Yes

**CIM Information:** **Prefix:** PLAT and **ID:** 0168

**SNMP Trap ID:** 27

**Automatically notify Support:** Yes

**User response:**

1. Run the hard disk drive diagnostic test on drive n.
2. Reseat the following components: a. Hard disk drive b. Cable from the system board to the backplane.
3. Replace the following components one at a time, in the order shown, restarting the server each time: a. Hard disk drive. b. Cable from the system board to the backplane. c. Hard disk drive backplane. (n = hard disk drive number)

**806f020d-0419ffff Failure Predicted on drive [StorageVolumeElementName] for array [ComputerSystemElementName]. (Drive 25)**

**Explanation:** This message is for the use case when an implementation has detected an Array Failure is Predicted.

May also be shown as 806f020d0419ffff or 0x806f020d0419ffff

**Severity:** Warning

**Alert Category:** System - Predicted Failure

**Serviceable:** Yes

**CIM Information:** **Prefix:** PLAT and **ID:** 0168

**SNMP Trap ID:** 27

**Automatically notify Support:** Yes

**User response:**

1. Run the hard disk drive diagnostic test on drive n.
2. Reseat the following components: a. Hard disk drive b. Cable from the system board to the backplane.
3. Replace the following components one at a time, in the order shown, restarting the server each time: a. Hard disk drive. b. Cable from the system board to the backplane. c. Hard disk drive backplane. (n = hard disk drive number)

**806f020d-041affff Failure Predicted on drive [StorageVolumeElementName] for array [ComputerSystemElementName]. (Drive 26)**

**Explanation:** This message is for the use case when an implementation has detected an Array Failure is Predicted.

May also be shown as 806f020d041affff or 0x806f020d041affff

**Severity:** Warning

**Alert Category:** System - Predicted Failure

**Serviceable:** Yes

**CIM Information:** **Prefix:** PLAT and **ID:** 0168

**SNMP Trap ID:** 27

**Automatically notify Support:** Yes

**User response:**

1. Run the hard disk drive diagnostic test on drive n.
2. Reseat the following components: a. Hard disk drive b. Cable from the system board to the backplane.
3. Replace the following components one at a time, in the order shown, restarting the server each time: a. Hard disk drive. b. Cable from the system board to the backplane. c. Hard disk drive backplane. (n = hard disk drive number)

**806f020d-041bffff Failure Predicted on drive [StorageVolumeElementName] for array [ComputerSystemElementName]. (Drive 27)**

**Explanation:** This message is for the use case when an implementation has detected an Array Failure is Predicted.

May also be shown as 806f020d041bffff or 0x806f020d041bffff

**Severity:** Warning

**Alert Category:** System - Predicted Failure

**Serviceable:** Yes

**CIM Information:** **Prefix:** PLAT and **ID:** 0168

**SNMP Trap ID:** 27

**Automatically notify Support:** Yes

**User response:**

1. Run the hard disk drive diagnostic test on drive n.
2. Reseat the following components: a. Hard disk drive b. Cable from the system board to the backplane.
3. Replace the following components one at a time, in the order shown, restarting the server each time: a. Hard disk drive. b. Cable from the system board to the backplane. c. Hard disk drive backplane. (n = hard disk drive number)

---

**806f020d-041cffff Failure Predicted on drive [StorageVolumeElementName] for array [ComputerSystemElementName]. (Drive 28)**

**Explanation:** This message is for the use case when an implementation has detected an Array Failure is Predicted.

May also be shown as 806f020d041cffff or 0x806f020d041cffff

**Severity:** Warning

**Alert Category:** System - Predicted Failure

**Serviceable:** Yes

**CIM Information:** **Prefix:** PLAT and **ID:** 0168

**SNMP Trap ID:** 27

**Automatically notify Support:** Yes

**User response:**

1. Run the hard disk drive diagnostic test on drive n.
2. Reseat the following components: a. Hard disk drive b. Cable from the system board to the backplane.
3. Replace the following components one at a time, in the order shown, restarting the server each time: a. Hard disk drive. b. Cable from the system board to the backplane. c. Hard disk drive backplane. (n = hard disk drive number)

**806f020d-041dffff Failure Predicted on drive [StorageVolumeElementName] for array [ComputerSystemElementName]. (Drive 29)**

**Explanation:** This message is for the use case when an implementation has detected an Array Failure is Predicted.

May also be shown as 806f020d041dffff or 0x806f020d041dffff

**Severity:** Warning

**Alert Category:** System - Predicted Failure

**Serviceable:** Yes

**CIM Information:** **Prefix:** PLAT and **ID:** 0168

**SNMP Trap ID:** 27

**Automatically notify Support:** Yes

**User response:**

1. Run the hard disk drive diagnostic test on drive n.
2. Reseat the following components: a. Hard disk drive b. Cable from the system board to the backplane.
3. Replace the following components one at a time, in the order shown, restarting the server each time: a. Hard disk drive. b. Cable from the system board to the backplane. c. Hard disk drive backplane. (n = hard disk drive number)

---

**806f020d-041effff Failure Predicted on drive [StorageVolumeElementName] for array [ComputerSystemElementName]. (Drive 30)**

**Explanation:** This message is for the use case when an implementation has detected an Array Failure is Predicted.

May also be shown as 806f020d041effff or 0x806f020d041effff

**Severity:** Warning

**Alert Category:** System - Predicted Failure

**Serviceable:** Yes

**CIM Information:** **Prefix:** PLAT and **ID:** 0168

**SNMP Trap ID:** 27

**Automatically notify Support:** Yes

**User response:**

1. Run the hard disk drive diagnostic test on drive n.
2. Reseat the following components: a. Hard disk drive b. Cable from the system board to the backplane.
3. Replace the following components one at a time, in the order shown, restarting the server each time: a. Hard disk drive. b. Cable from the system board to the backplane. c. Hard disk drive backplane. (n = hard disk drive number)

**806f020d-041fffff Failure Predicted on drive [StorageVolumeElementName] for array [ComputerSystemElementName]. (Drive 31)**

**Explanation:** This message is for the use case when an implementation has detected an Array Failure is Predicted.

May also be shown as 806f020d041fffff or 0x806f020d041fffff

**Severity:** Warning

**Alert Category:** System - Predicted Failure

**Serviceable:** Yes

**CIM Information:** **Prefix:** PLAT and **ID:** 0168

**SNMP Trap ID:** 27

**Automatically notify Support:** Yes

**User response:**

1. Run the hard disk drive diagnostic test on drive n.
2. Reseat the following components: a. Hard disk drive b. Cable from the system board to the backplane.
3. Replace the following components one at a time, in the order shown, restarting the server each time: a. Hard disk drive. b. Cable from the system board to the backplane. c. Hard disk drive backplane. (n = hard disk drive number)

---

**806f0223-2101ffff Powering off system [ComputerSystemElementName] initiated by [WatchdogElementName]. (IPMI Watchdog)**

**Explanation:** This message is for the use case when an implementation has detected a Poweroff by Watchdog has occurred.

May also be shown as 806f02232101ffff or 0x806f02232101ffff

**Severity:** Info

**Alert Category:** System - Other

**Serviceable:** No

**CIM Information:** **Prefix:** PLAT and **ID:** 0372

**SNMP Trap ID:**

**Automatically notify Support:** No

**User response:** No action; information only.

---

**806f0308-0a01ffff [PowerSupplyElementName] has lost input. (Power Supply 1)**

**Explanation:** This message is for the use case when an implementation has detected a Power Supply that has input that has been lost.

May also be shown as 806f03080a01ffff or 0x806f03080a01ffff

**Severity:** Info

**Alert Category:** System - Other

**Serviceable:** No

**CIM Information:** **Prefix:** PLAT and **ID:** 0100

**SNMP Trap ID:**

**Automatically notify Support:** No

**User response:**

1. Reconnect the power cords.
2. Check power supply n LED.

3. See Power-supply LEDs for more information. (n = power supply number)

---

**806f0308-0a02ffff [PowerSupplyElementName] has lost input. (Power Supply 2)**

**Explanation:** This message is for the use case when an implementation has detected a Power Supply that has input that has been lost.

May also be shown as 806f03080a02ffff or 0x806f03080a02ffff

**Severity:** Info

**Alert Category:** System - Other

**Serviceable:** No

**CIM Information:** **Prefix:** PLAT and **ID:** 0100

**SNMP Trap ID:**

**Automatically notify Support:** No

**User response:**

1. Reconnect the power cords.
2. Check power supply n LED.
3. See Power-supply LEDs for more information. (n = power supply number)

---

**806f030c-2001ffff Scrub Failure for [PhysicalMemoryElementName] on Subsystem [MemoryElementName]. (DIMM 1)**

**Explanation:** This message is for the use case when an implementation has detected a Memory Scrub failure.

May also be shown as 806f030c2001ffff or 0x806f030c2001ffff

**Severity:** Error

**Alert Category:** Critical - Memory

**Serviceable:** Yes

**CIM Information:** **Prefix:** PLAT and **ID:** 0136

**SNMP Trap ID:** 41

**Automatically notify Support:** No

**User response:** Note: Each time you install or remove a DIMM, you must disconnect the server from the power source; then, wait 10 seconds before restarting the server.

1. Check the IBM support website for an applicable retain tip or firmware update that applies to this memory error.
2. Make sure that the DIMMs are firmly seated and no foreign material is found in the DIMM connector. Then, retry with the same DIMM.
3. If the problem is related to a DIMM, replace the failing DIMM indicated by the error LEDs.
4. If the problem occurs on the same DIMM connector, swap the affected DIMMs (as indicated by the error LEDs on the system board or the event logs) to a different memory channel or microprocessor.
5. If the problem occurs on the same DIMM connector, check the DIMM connector. If the connector contains any foreign material or is damaged, replace the system board.
6. (Trained service technician only) Remove the affected microprocessor and check the microprocessor socket pins for any damaged pins. If a damage is found, replace the system board.
7. (Trained service technician only) If the problem is related to microprocessor socket pins, replace the system board.

**806f030c-2002ffff Scrub Failure for [PhysicalMemoryElementName] on Subsystem [MemoryElementName]. (DIMM 2)**

**Explanation:** This message is for the use case when an implementation has detected a Memory Scrub failure.

May also be shown as 806f030c2002ffff or 0x806f030c2002ffff

**Severity:** Error

**Alert Category:** Critical - Memory

**Serviceable:** Yes

**CIM Information:** **Prefix:** PLAT and **ID:** 0136

**SNMP Trap ID:** 41

**Automatically notify Support:** No

**User response:** Note: Each time you install or remove a DIMM, you must disconnect the server from the power source; then, wait 10 seconds before restarting the server.

1. Check the IBM support website for an applicable retain tip or firmware update that applies to this memory error.
2. Make sure that the DIMMs are firmly seated and no foreign material is found in the DIMM connector. Then, retry with the same DIMM.
3. If the problem is related to a DIMM, replace the failing DIMM indicated by the error LEDs.
4. If the problem occurs on the same DIMM connector, swap the affected DIMMs (as indicated by the error LEDs on the system board or the event logs) to a different memory channel or microprocessor.
5. If the problem occurs on the same DIMM connector, check the DIMM connector. If the connector contains any foreign material or is damaged, replace the system board.
6. (Trained service technician only) Remove the affected microprocessor and check the microprocessor socket pins for any damaged pins. If a damage is found, replace the system board.
7. (Trained service technician only) If the problem is related to microprocessor socket pins, replace the system board.

**806f030c-2003ffff Scrub Failure for [PhysicalMemoryElementName] on Subsystem [MemoryElementName]. (DIMM 3)**

**Explanation:** This message is for the use case when an implementation has detected a Memory Scrub failure.

May also be shown as 806f030c2003ffff or 0x806f030c2003ffff

**Severity:** Error

**Alert Category:** Critical - Memory

**Serviceable:** Yes

**CIM Information:** **Prefix:** PLAT and **ID:** 0136

**SNMP Trap ID:** 41

**Automatically notify Support:** No

**User response:** Note: Each time you install or remove a DIMM, you must disconnect the server from the power source; then, wait 10 seconds before restarting the server.

1. Check the IBM support website for an applicable retain tip or firmware update that applies to this memory error.
2. Make sure that the DIMMs are firmly seated and no foreign material is found in the DIMM connector. Then, retry with the same DIMM.
3. If the problem is related to a DIMM, replace the failing DIMM indicated by the error LEDs.
4. If the problem occurs on the same DIMM connector, swap the affected DIMMs (as indicated by the error LEDs on the system board or the event logs) to a different memory channel or microprocessor.
5. If the problem occurs on the same DIMM connector, check the DIMM connector. If the connector contains any foreign material or is damaged, replace the system board.
6. (Trained service technician only) Remove the affected microprocessor and check the microprocessor socket pins for any damaged pins. If a damage is found, replace the system board.

7. (Trained service technician only) If the problem is related to microprocessor socket pins, replace the system board.

---

**806f030c-2004ffff Scrub Failure for [PhysicalMemoryElementName] on Subsystem [MemoryElementName]. (DIMM 4)**

**Explanation:** This message is for the use case when an implementation has detected a Memory Scrub failure.

May also be shown as 806f030c2004ffff or 0x806f030c2004ffff

**Severity:** Error

**Alert Category:** Critical - Memory

**Serviceable:** Yes

**CIM Information:** **Prefix:** PLAT and **ID:** 0136

**SNMP Trap ID:** 41

**Automatically notify Support:** No

**User response:** Note: Each time you install or remove a DIMM, you must disconnect the server from the power source; then, wait 10 seconds before restarting the server.

1. Check the IBM support website for an applicable retain tip or firmware update that applies to this memory error.
2. Make sure that the DIMMs are firmly seated and no foreign material is found in the DIMM connector. Then, retry with the same DIMM.
3. If the problem is related to a DIMM, replace the failing DIMM indicated by the error LEDs.
4. If the problem occurs on the same DIMM connector, swap the affected DIMMs (as indicated by the error LEDs on the system board or the event logs) to a different memory channel or microprocessor.
5. If the problem occurs on the same DIMM connector, check the DIMM connector. If the connector contains any foreign material or is damaged, replace the system board.
6. (Trained service technician only) Remove the affected microprocessor and check the microprocessor socket pins for any damaged pins. If a damage is found, replace the system board.
7. (Trained service technician only) If the problem is related to microprocessor socket pins, replace the system board.

---

**806f030c-2005ffff Scrub Failure for [PhysicalMemoryElementName] on Subsystem [MemoryElementName]. (DIMM 5)**

**Explanation:** This message is for the use case when an implementation has detected a Memory Scrub failure.

May also be shown as 806f030c2005ffff or 0x806f030c2005ffff

**Severity:** Error

**Alert Category:** Critical - Memory

**Serviceable:** Yes

**CIM Information:** **Prefix:** PLAT and **ID:** 0136

**SNMP Trap ID:** 41

**Automatically notify Support:** No

**User response:** Note: Each time you install or remove a DIMM, you must disconnect the server from the power source; then, wait 10 seconds before restarting the server.

1. Check the IBM support website for an applicable retain tip or firmware update that applies to this memory error.
2. Make sure that the DIMMs are firmly seated and no foreign material is found in the DIMM connector. Then, retry with the same DIMM.
3. If the problem is related to a DIMM, replace the failing DIMM indicated by the error LEDs.
4. If the problem occurs on the same DIMM connector, swap the affected DIMMs (as indicated by the error LEDs on the system board or the event logs) to a different memory channel or microprocessor.

5. If the problem occurs on the same DIMM connector, check the DIMM connector. If the connector contains any foreign material or is damaged, replace the system board.
6. (Trained service technician only) Remove the affected microprocessor and check the microprocessor socket pins for any damaged pins. If a damage is found, replace the system board.
7. (Trained service technician only) If the problem is related to microprocessor socket pins, replace the system board.

---

**806f030c-2006ffff Scrub Failure for [PhysicalMemoryElementName] on Subsystem [MemoryElementName]. (DIMM 6)**

**Explanation:** This message is for the use case when an implementation has detected a Memory Scrub failure.

May also be shown as 806f030c2006ffff or 0x806f030c2006ffff

**Severity:** Error

**Alert Category:** Critical - Memory

**Serviceable:** Yes

**CIM Information:** **Prefix:** PLAT and **ID:** 0136

**SNMP Trap ID:** 41

**Automatically notify Support:** No

**User response:** Note: Each time you install or remove a DIMM, you must disconnect the server from the power source; then, wait 10 seconds before restarting the server.

1. Check the IBM support website for an applicable retain tip or firmware update that applies to this memory error.
2. Make sure that the DIMMs are firmly seated and no foreign material is found in the DIMM connector. Then, retry with the same DIMM.
3. If the problem is related to a DIMM, replace the failing DIMM indicated by the error LEDs.
4. If the problem occurs on the same DIMM connector, swap the affected DIMMs (as indicated by the error LEDs on the system board or the event logs) to a different memory channel or microprocessor.
5. If the problem occurs on the same DIMM connector, check the DIMM connector. If the connector contains any foreign material or is damaged, replace the system board.
6. (Trained service technician only) Remove the affected microprocessor and check the microprocessor socket pins for any damaged pins. If a damage is found, replace the system board.
7. (Trained service technician only) If the problem is related to microprocessor socket pins, replace the system board.

---

**806f030c-2007ffff Scrub Failure for [PhysicalMemoryElementName] on Subsystem [MemoryElementName]. (DIMM 7)**

**Explanation:** This message is for the use case when an implementation has detected a Memory Scrub failure.

May also be shown as 806f030c2007ffff or 0x806f030c2007ffff

**Severity:** Error

**Alert Category:** Critical - Memory

**Serviceable:** Yes

**CIM Information:** **Prefix:** PLAT and **ID:** 0136

**SNMP Trap ID:** 41

**Automatically notify Support:** No

**User response:** Note: Each time you install or remove a DIMM, you must disconnect the server from the power source; then, wait 10 seconds before restarting the server.

1. Check the IBM support website for an applicable retain tip or firmware update that applies to this memory error.
2. Make sure that the DIMMs are firmly seated and no foreign material is found in the DIMM connector. Then, retry with the same DIMM.

3. If the problem is related to a DIMM, replace the failing DIMM indicated by the error LEDs.
4. If the problem occurs on the same DIMM connector, swap the affected DIMMs (as indicated by the error LEDs on the system board or the event logs) to a different memory channel or microprocessor.
5. If the problem occurs on the same DIMM connector, check the DIMM connector. If the connector contains any foreign material or is damaged, replace the system board.
6. (Trained service technician only) Remove the affected microprocessor and check the microprocessor socket pins for any damaged pins. If a damage is found, replace the system board.
7. (Trained service technician only) If the problem is related to microprocessor socket pins, replace the system board.

---

**806f030c-2008ffff Scrub Failure for [PhysicalMemoryElementName] on Subsystem [MemoryElementName]. (DIMM 8)**

**Explanation:** This message is for the use case when an implementation has detected a Memory Scrub failure.

May also be shown as 806f030c2008ffff or 0x806f030c2008ffff

**Severity:** Error

**Alert Category:** Critical - Memory

**Serviceable:** Yes

**CIM Information:** **Prefix:** PLAT and **ID:** 0136

**SNMP Trap ID:** 41

**Automatically notify Support:** No

**User response:** Note: Each time you install or remove a DIMM, you must disconnect the server from the power source; then, wait 10 seconds before restarting the server.

1. Check the IBM support website for an applicable retain tip or firmware update that applies to this memory error.
2. Make sure that the DIMMs are firmly seated and no foreign material is found in the DIMM connector. Then, retry with the same DIMM.
3. If the problem is related to a DIMM, replace the failing DIMM indicated by the error LEDs.
4. If the problem occurs on the same DIMM connector, swap the affected DIMMs (as indicated by the error LEDs on the system board or the event logs) to a different memory channel or microprocessor.
5. If the problem occurs on the same DIMM connector, check the DIMM connector. If the connector contains any foreign material or is damaged, replace the system board.
6. (Trained service technician only) Remove the affected microprocessor and check the microprocessor socket pins for any damaged pins. If a damage is found, replace the system board.
7. (Trained service technician only) If the problem is related to microprocessor socket pins, replace the system board.

**806f030c-2009ffff Scrub Failure for [PhysicalMemoryElementName] on Subsystem [MemoryElementName]. (DIMM 9)**

**Explanation:** This message is for the use case when an implementation has detected a Memory Scrub failure.

May also be shown as 806f030c2009ffff or 0x806f030c2009ffff

**Severity:** Error

**Alert Category:** Critical - Memory

**Serviceable:** Yes

**CIM Information:** **Prefix:** PLAT and **ID:** 0136

**SNMP Trap ID:** 41

**Automatically notify Support:** No

**User response:** Note: Each time you install or remove a DIMM, you must disconnect the server from the power source; then, wait 10 seconds before restarting the server.

1. Check the IBM support website for an applicable retain tip or firmware update that applies to this memory error.
2. Make sure that the DIMMs are firmly seated and no foreign material is found in the DIMM connector. Then, retry with the same DIMM.
3. If the problem is related to a DIMM, replace the failing DIMM indicated by the error LEDs.
4. If the problem occurs on the same DIMM connector, swap the affected DIMMs (as indicated by the error LEDs on the system board or the event logs) to a different memory channel or microprocessor.
5. If the problem occurs on the same DIMM connector, check the DIMM connector. If the connector contains any foreign material or is damaged, replace the system board.
6. (Trained service technician only) Remove the affected microprocessor and check the microprocessor socket pins for any damaged pins. If a damage is found, replace the system board.
7. (Trained service technician only) If the problem is related to microprocessor socket pins, replace the system board.

**806f030c-200affff Scrub Failure for [PhysicalMemoryElementName] on Subsystem [MemoryElementName]. (DIMM 10)**

**Explanation:** This message is for the use case when an implementation has detected a Memory Scrub failure.

May also be shown as 806f030c200affff or 0x806f030c200affff

**Severity:** Error

**Alert Category:** Critical - Memory

**Serviceable:** Yes

**CIM Information:** **Prefix:** PLAT and **ID:** 0136

**SNMP Trap ID:** 41

**Automatically notify Support:** No

**User response:** Note: Each time you install or remove a DIMM, you must disconnect the server from the power source; then, wait 10 seconds before restarting the server.

1. Check the IBM support website for an applicable retain tip or firmware update that applies to this memory error.
2. Make sure that the DIMMs are firmly seated and no foreign material is found in the DIMM connector. Then, retry with the same DIMM.
3. If the problem is related to a DIMM, replace the failing DIMM indicated by the error LEDs.
4. If the problem occurs on the same DIMM connector, swap the affected DIMMs (as indicated by the error LEDs on the system board or the event logs) to a different memory channel or microprocessor.
5. If the problem occurs on the same DIMM connector, check the DIMM connector. If the connector contains any foreign material or is damaged, replace the system board.
6. (Trained service technician only) Remove the affected microprocessor and check the microprocessor socket pins for any damaged pins. If a damage is found, replace the system board.

7. (Trained service technician only) If the problem is related to microprocessor socket pins, replace the system board.

---

**806f030c-200bffff Scrub Failure for [PhysicalMemoryElementName] on Subsystem [MemoryElementName]. (DIMM 11)**

**Explanation:** This message is for the use case when an implementation has detected a Memory Scrub failure.

May also be shown as 806f030c200bffff or 0x806f030c200bffff

**Severity:** Error

**Alert Category:** Critical - Memory

**Serviceable:** Yes

**CIM Information:** **Prefix:** PLAT and **ID:** 0136

**SNMP Trap ID:** 41

**Automatically notify Support:** No

**User response:** Note: Each time you install or remove a DIMM, you must disconnect the server from the power source; then, wait 10 seconds before restarting the server.

1. Check the IBM support website for an applicable retain tip or firmware update that applies to this memory error.
2. Make sure that the DIMMs are firmly seated and no foreign material is found in the DIMM connector. Then, retry with the same DIMM.
3. If the problem is related to a DIMM, replace the failing DIMM indicated by the error LEDs.
4. If the problem occurs on the same DIMM connector, swap the affected DIMMs (as indicated by the error LEDs on the system board or the event logs) to a different memory channel or microprocessor.
5. If the problem occurs on the same DIMM connector, check the DIMM connector. If the connector contains any foreign material or is damaged, replace the system board.
6. (Trained service technician only) Remove the affected microprocessor and check the microprocessor socket pins for any damaged pins. If a damage is found, replace the system board.
7. (Trained service technician only) If the problem is related to microprocessor socket pins, replace the system board.

---

**806f030c-200cffff Scrub Failure for [PhysicalMemoryElementName] on Subsystem [MemoryElementName]. (DIMM 12)**

**Explanation:** This message is for the use case when an implementation has detected a Memory Scrub failure.

May also be shown as 806f030c200cffff or 0x806f030c200cffff

**Severity:** Error

**Alert Category:** Critical - Memory

**Serviceable:** Yes

**CIM Information:** **Prefix:** PLAT and **ID:** 0136

**SNMP Trap ID:** 41

**Automatically notify Support:** No

**User response:** Note: Each time you install or remove a DIMM, you must disconnect the server from the power source; then, wait 10 seconds before restarting the server.

1. Check the IBM support website for an applicable retain tip or firmware update that applies to this memory error.
2. Make sure that the DIMMs are firmly seated and no foreign material is found in the DIMM connector. Then, retry with the same DIMM.
3. If the problem is related to a DIMM, replace the failing DIMM indicated by the error LEDs.
4. If the problem occurs on the same DIMM connector, swap the affected DIMMs (as indicated by the error LEDs on the system board or the event logs) to a different memory channel or microprocessor.

5. If the problem occurs on the same DIMM connector, check the DIMM connector. If the connector contains any foreign material or is damaged, replace the system board.
6. (Trained service technician only) Remove the affected microprocessor and check the microprocessor socket pins for any damaged pins. If a damage is found, replace the system board.
7. (Trained service technician only) If the problem is related to microprocessor socket pins, replace the system board.

---

**806f030c-200dffff Scrub Failure for [PhysicalMemoryElementName] on Subsystem [MemoryElementName]. (DIMM 13)**

**Explanation:** This message is for the use case when an implementation has detected a Memory Scrub failure.

May also be shown as 806f030c200dffff or 0x806f030c200dffff

**Severity:** Error

**Alert Category:** Critical - Memory

**Serviceable:** Yes

**CIM Information:** **Prefix:** PLAT and **ID:** 0136

**SNMP Trap ID:** 41

**Automatically notify Support:** No

**User response:** Note: Each time you install or remove a DIMM, you must disconnect the server from the power source; then, wait 10 seconds before restarting the server.

1. Check the IBM support website for an applicable retain tip or firmware update that applies to this memory error.
2. Make sure that the DIMMs are firmly seated and no foreign material is found in the DIMM connector. Then, retry with the same DIMM.
3. If the problem is related to a DIMM, replace the failing DIMM indicated by the error LEDs.
4. If the problem occurs on the same DIMM connector, swap the affected DIMMs (as indicated by the error LEDs on the system board or the event logs) to a different memory channel or microprocessor.
5. If the problem occurs on the same DIMM connector, check the DIMM connector. If the connector contains any foreign material or is damaged, replace the system board.
6. (Trained service technician only) Remove the affected microprocessor and check the microprocessor socket pins for any damaged pins. If a damage is found, replace the system board.
7. (Trained service technician only) If the problem is related to microprocessor socket pins, replace the system board.

---

**806f030c-200effff Scrub Failure for [PhysicalMemoryElementName] on Subsystem [MemoryElementName]. (DIMM 14)**

**Explanation:** This message is for the use case when an implementation has detected a Memory Scrub failure.

May also be shown as 806f030c200effff or 0x806f030c200effff

**Severity:** Error

**Alert Category:** Critical - Memory

**Serviceable:** Yes

**CIM Information:** **Prefix:** PLAT and **ID:** 0136

**SNMP Trap ID:** 41

**Automatically notify Support:** No

**User response:** Note: Each time you install or remove a DIMM, you must disconnect the server from the power source; then, wait 10 seconds before restarting the server.

1. Check the IBM support website for an applicable retain tip or firmware update that applies to this memory error.
2. Make sure that the DIMMs are firmly seated and no foreign material is found in the DIMM connector. Then, retry with the same DIMM.

3. If the problem is related to a DIMM, replace the failing DIMM indicated by the error LEDs.
4. If the problem occurs on the same DIMM connector, swap the affected DIMMs (as indicated by the error LEDs on the system board or the event logs) to a different memory channel or microprocessor.
5. If the problem occurs on the same DIMM connector, check the DIMM connector. If the connector contains any foreign material or is damaged, replace the system board.
6. (Trained service technician only) Remove the affected microprocessor and check the microprocessor socket pins for any damaged pins. If a damage is found, replace the system board.
7. (Trained service technician only) If the problem is related to microprocessor socket pins, replace the system board.

---

**806f030c-200fffff Scrub Failure for [PhysicalMemoryElementName] on Subsystem [MemoryElementName]. (DIMM 15)**

**Explanation:** This message is for the use case when an implementation has detected a Memory Scrub failure.

May also be shown as 806f030c200fffff or 0x806f030c200fffff

**Severity:** Error

**Alert Category:** Critical - Memory

**Serviceable:** Yes

**CIM Information:** **Prefix:** PLAT and **ID:** 0136

**SNMP Trap ID:** 41

**Automatically notify Support:** No

**User response:** Note: Each time you install or remove a DIMM, you must disconnect the server from the power source; then, wait 10 seconds before restarting the server.

1. Check the IBM support website for an applicable retain tip or firmware update that applies to this memory error.
2. Make sure that the DIMMs are firmly seated and no foreign material is found in the DIMM connector. Then, retry with the same DIMM.
3. If the problem is related to a DIMM, replace the failing DIMM indicated by the error LEDs.
4. If the problem occurs on the same DIMM connector, swap the affected DIMMs (as indicated by the error LEDs on the system board or the event logs) to a different memory channel or microprocessor.
5. If the problem occurs on the same DIMM connector, check the DIMM connector. If the connector contains any foreign material or is damaged, replace the system board.
6. (Trained service technician only) Remove the affected microprocessor and check the microprocessor socket pins for any damaged pins. If a damage is found, replace the system board.
7. (Trained service technician only) If the problem is related to microprocessor socket pins, replace the system board.

**806f030c-2010ffff Scrub Failure for [PhysicalMemoryElementName] on Subsystem [MemoryElementName]. (DIMM 16)**

**Explanation:** This message is for the use case when an implementation has detected a Memory Scrub failure.

May also be shown as 806f030c2010ffff or 0x806f030c2010ffff

**Severity:** Error

**Alert Category:** Critical - Memory

**Serviceable:** Yes

**CIM Information:** **Prefix:** PLAT and **ID:** 0136

**SNMP Trap ID:** 41

**Automatically notify Support:** No

**User response:** Note: Each time you install or remove a DIMM, you must disconnect the server from the power source; then, wait 10 seconds before restarting the server.

1. Check the IBM support website for an applicable retain tip or firmware update that applies to this memory error.
2. Make sure that the DIMMs are firmly seated and no foreign material is found in the DIMM connector. Then, retry with the same DIMM.
3. If the problem is related to a DIMM, replace the failing DIMM indicated by the error LEDs.
4. If the problem occurs on the same DIMM connector, swap the affected DIMMs (as indicated by the error LEDs on the system board or the event logs) to a different memory channel or microprocessor.
5. If the problem occurs on the same DIMM connector, check the DIMM connector. If the connector contains any foreign material or is damaged, replace the system board.
6. (Trained service technician only) Remove the affected microprocessor and check the microprocessor socket pins for any damaged pins. If a damage is found, replace the system board.
7. (Trained service technician only) If the problem is related to microprocessor socket pins, replace the system board.

**806f030c-2011ffff Scrub Failure for [PhysicalMemoryElementName] on Subsystem [MemoryElementName]. (DIMM 17)**

**Explanation:** This message is for the use case when an implementation has detected a Memory Scrub failure.

May also be shown as 806f030c2011ffff or 0x806f030c2011ffff

**Severity:** Error

**Alert Category:** Critical - Memory

**Serviceable:** Yes

**CIM Information:** **Prefix:** PLAT and **ID:** 0136

**SNMP Trap ID:** 41

**Automatically notify Support:** No

**User response:** Note: Each time you install or remove a DIMM, you must disconnect the server from the power source; then, wait 10 seconds before restarting the server.

1. Check the IBM support website for an applicable retain tip or firmware update that applies to this memory error.
2. Make sure that the DIMMs are firmly seated and no foreign material is found in the DIMM connector. Then, retry with the same DIMM.
3. If the problem is related to a DIMM, replace the failing DIMM indicated by the error LEDs.
4. If the problem occurs on the same DIMM connector, swap the affected DIMMs (as indicated by the error LEDs on the system board or the event logs) to a different memory channel or microprocessor.
5. If the problem occurs on the same DIMM connector, check the DIMM connector. If the connector contains any foreign material or is damaged, replace the system board.
6. (Trained service technician only) Remove the affected microprocessor and check the microprocessor socket pins for any damaged pins. If a damage is found, replace the system board.

7. (Trained service technician only) If the problem is related to microprocessor socket pins, replace the system board.

---

**806f030c-2012ffff Scrub Failure for [PhysicalMemoryElementName] on Subsystem [MemoryElementName]. (DIMM 18)**

**Explanation:** This message is for the use case when an implementation has detected a Memory Scrub failure.

May also be shown as 806f030c2012ffff or 0x806f030c2012ffff

**Severity:** Error

**Alert Category:** Critical - Memory

**Serviceable:** Yes

**CIM Information:** **Prefix:** PLAT and **ID:** 0136

**SNMP Trap ID:** 41

**Automatically notify Support:** No

**User response:** Note: Each time you install or remove a DIMM, you must disconnect the server from the power source; then, wait 10 seconds before restarting the server.

1. Check the IBM support website for an applicable retain tip or firmware update that applies to this memory error.
2. Make sure that the DIMMs are firmly seated and no foreign material is found in the DIMM connector. Then, retry with the same DIMM.
3. If the problem is related to a DIMM, replace the failing DIMM indicated by the error LEDs.
4. If the problem occurs on the same DIMM connector, swap the affected DIMMs (as indicated by the error LEDs on the system board or the event logs) to a different memory channel or microprocessor.
5. If the problem occurs on the same DIMM connector, check the DIMM connector. If the connector contains any foreign material or is damaged, replace the system board.
6. (Trained service technician only) Remove the affected microprocessor and check the microprocessor socket pins for any damaged pins. If a damage is found, replace the system board.
7. (Trained service technician only) If the problem is related to microprocessor socket pins, replace the system board.

---

**806f030c-2013ffff Scrub Failure for [PhysicalMemoryElementName] on Subsystem [MemoryElementName]. (DIMM 19)**

**Explanation:** This message is for the use case when an implementation has detected a Memory Scrub failure.

May also be shown as 806f030c2013ffff or 0x806f030c2013ffff

**Severity:** Error

**Alert Category:** Critical - Memory

**Serviceable:** Yes

**CIM Information:** **Prefix:** PLAT and **ID:** 0136

**SNMP Trap ID:** 41

**Automatically notify Support:** No

**User response:** Note: Each time you install or remove a DIMM, you must disconnect the server from the power source; then, wait 10 seconds before restarting the server.

1. Check the IBM support website for an applicable retain tip or firmware update that applies to this memory error.
2. Make sure that the DIMMs are firmly seated and no foreign material is found in the DIMM connector. Then, retry with the same DIMM.
3. If the problem is related to a DIMM, replace the failing DIMM indicated by the error LEDs.
4. If the problem occurs on the same DIMM connector, swap the affected DIMMs (as indicated by the error LEDs on the system board or the event logs) to a different memory channel or microprocessor.

5. If the problem occurs on the same DIMM connector, check the DIMM connector. If the connector contains any foreign material or is damaged, replace the system board.
6. (Trained service technician only) Remove the affected microprocessor and check the microprocessor socket pins for any damaged pins. If a damage is found, replace the system board.
7. (Trained service technician only) If the problem is related to microprocessor socket pins, replace the system board.

---

**806f030c-2014ffff Scrub Failure for [PhysicalMemoryElementName] on Subsystem [MemoryElementName]. (DIMM 20)**

**Explanation:** This message is for the use case when an implementation has detected a Memory Scrub failure.

May also be shown as 806f030c2014ffff or 0x806f030c2014ffff

**Severity:** Error

**Alert Category:** Critical - Memory

**Serviceable:** Yes

**CIM Information:** **Prefix:** PLAT and **ID:** 0136

**SNMP Trap ID:** 41

**Automatically notify Support:** No

**User response:** Note: Each time you install or remove a DIMM, you must disconnect the server from the power source; then, wait 10 seconds before restarting the server.

1. Check the IBM support website for an applicable retain tip or firmware update that applies to this memory error.
2. Make sure that the DIMMs are firmly seated and no foreign material is found in the DIMM connector. Then, retry with the same DIMM.
3. If the problem is related to a DIMM, replace the failing DIMM indicated by the error LEDs.
4. If the problem occurs on the same DIMM connector, swap the affected DIMMs (as indicated by the error LEDs on the system board or the event logs) to a different memory channel or microprocessor.
5. If the problem occurs on the same DIMM connector, check the DIMM connector. If the connector contains any foreign material or is damaged, replace the system board.
6. (Trained service technician only) Remove the affected microprocessor and check the microprocessor socket pins for any damaged pins. If a damage is found, replace the system board.
7. (Trained service technician only) If the problem is related to microprocessor socket pins, replace the system board.

---

**806f030c-2015ffff Scrub Failure for [PhysicalMemoryElementName] on Subsystem [MemoryElementName]. (DIMM 21)**

**Explanation:** This message is for the use case when an implementation has detected a Memory Scrub failure.

May also be shown as 806f030c2015ffff or 0x806f030c2015ffff

**Severity:** Error

**Alert Category:** Critical - Memory

**Serviceable:** Yes

**CIM Information:** **Prefix:** PLAT and **ID:** 0136

**SNMP Trap ID:** 41

**Automatically notify Support:** No

**User response:** Note: Each time you install or remove a DIMM, you must disconnect the server from the power source; then, wait 10 seconds before restarting the server.

1. Check the IBM support website for an applicable retain tip or firmware update that applies to this memory error.
2. Make sure that the DIMMs are firmly seated and no foreign material is found in the DIMM connector. Then, retry with the same DIMM.

3. If the problem is related to a DIMM, replace the failing DIMM indicated by the error LEDs.
4. If the problem occurs on the same DIMM connector, swap the affected DIMMs (as indicated by the error LEDs on the system board or the event logs) to a different memory channel or microprocessor.
5. If the problem occurs on the same DIMM connector, check the DIMM connector. If the connector contains any foreign material or is damaged, replace the system board.
6. (Trained service technician only) Remove the affected microprocessor and check the microprocessor socket pins for any damaged pins. If a damage is found, replace the system board.
7. (Trained service technician only) If the problem is related to microprocessor socket pins, replace the system board.

---

**806f030c-2016ffff Scrub Failure for [PhysicalMemoryElementName] on Subsystem [MemoryElementName]. (DIMM 22)**

**Explanation:** This message is for the use case when an implementation has detected a Memory Scrub failure.

May also be shown as 806f030c2016ffff or 0x806f030c2016ffff

**Severity:** Error

**Alert Category:** Critical - Memory

**Serviceable:** Yes

**CIM Information:** **Prefix:** PLAT and **ID:** 0136

**SNMP Trap ID:** 41

**Automatically notify Support:** No

**User response:** Note: Each time you install or remove a DIMM, you must disconnect the server from the power source; then, wait 10 seconds before restarting the server.

1. Check the IBM support website for an applicable retain tip or firmware update that applies to this memory error.
2. Make sure that the DIMMs are firmly seated and no foreign material is found in the DIMM connector. Then, retry with the same DIMM.
3. If the problem is related to a DIMM, replace the failing DIMM indicated by the error LEDs.
4. If the problem occurs on the same DIMM connector, swap the affected DIMMs (as indicated by the error LEDs on the system board or the event logs) to a different memory channel or microprocessor.
5. If the problem occurs on the same DIMM connector, check the DIMM connector. If the connector contains any foreign material or is damaged, replace the system board.
6. (Trained service technician only) Remove the affected microprocessor and check the microprocessor socket pins for any damaged pins. If a damage is found, replace the system board.
7. (Trained service technician only) If the problem is related to microprocessor socket pins, replace the system board.

**806f030c-2017ffff Scrub Failure for [PhysicalMemoryElementName] on Subsystem [MemoryElementName]. (DIMM 23)**

**Explanation:** This message is for the use case when an implementation has detected a Memory Scrub failure.

May also be shown as 806f030c2017ffff or 0x806f030c2017ffff

**Severity:** Error

**Alert Category:** Critical - Memory

**Serviceable:** Yes

**CIM Information:** **Prefix:** PLAT and **ID:** 0136

**SNMP Trap ID:** 41

**Automatically notify Support:** No

**User response:** Note: Each time you install or remove a DIMM, you must disconnect the server from the power source; then, wait 10 seconds before restarting the server.

1. Check the IBM support website for an applicable retain tip or firmware update that applies to this memory error.
2. Make sure that the DIMMs are firmly seated and no foreign material is found in the DIMM connector. Then, retry with the same DIMM.
3. If the problem is related to a DIMM, replace the failing DIMM indicated by the error LEDs.
4. If the problem occurs on the same DIMM connector, swap the affected DIMMs (as indicated by the error LEDs on the system board or the event logs) to a different memory channel or microprocessor.
5. If the problem occurs on the same DIMM connector, check the DIMM connector. If the connector contains any foreign material or is damaged, replace the system board.
6. (Trained service technician only) Remove the affected microprocessor and check the microprocessor socket pins for any damaged pins. If a damage is found, replace the system board.
7. (Trained service technician only) If the problem is related to microprocessor socket pins, replace the system board.

**806f030c-2018ffff Scrub Failure for [PhysicalMemoryElementName] on Subsystem [MemoryElementName]. (DIMM 24)**

**Explanation:** This message is for the use case when an implementation has detected a Memory Scrub failure.

May also be shown as 806f030c2018ffff or 0x806f030c2018ffff

**Severity:** Error

**Alert Category:** Critical - Memory

**Serviceable:** Yes

**CIM Information:** **Prefix:** PLAT and **ID:** 0136

**SNMP Trap ID:** 41

**Automatically notify Support:** No

**User response:** Note: Each time you install or remove a DIMM, you must disconnect the server from the power source; then, wait 10 seconds before restarting the server.

1. Check the IBM support website for an applicable retain tip or firmware update that applies to this memory error.
2. Make sure that the DIMMs are firmly seated and no foreign material is found in the DIMM connector. Then, retry with the same DIMM.
3. If the problem is related to a DIMM, replace the failing DIMM indicated by the error LEDs.
4. If the problem occurs on the same DIMM connector, swap the affected DIMMs (as indicated by the error LEDs on the system board or the event logs) to a different memory channel or microprocessor.
5. If the problem occurs on the same DIMM connector, check the DIMM connector. If the connector contains any foreign material or is damaged, replace the system board.
6. (Trained service technician only) Remove the affected microprocessor and check the microprocessor socket pins for any damaged pins. If a damage is found, replace the system board.

7. (Trained service technician only) If the problem is related to microprocessor socket pins, replace the system board.

---

**806f030d-0400ffff Hot Spare enabled for [ComputerSystemElementName]. (Drive 0)**

**Explanation:** This message is for the use case when an implementation has detected a Hot Spare has been Enabled.

May also be shown as 806f030d0400ffff or 0x806f030d0400ffff

**Severity:** Info

**Alert Category:** System - Other

**Serviceable:** No

**CIM Information:** **Prefix:** PLAT and **ID:** 0170

**SNMP Trap ID:**

**Automatically notify Support:** No

**User response:** No action; information only.

---

**806f030d-0401ffff Hot Spare enabled for [ComputerSystemElementName]. (Drive 1)**

**Explanation:** This message is for the use case when an implementation has detected a Hot Spare has been Enabled.

May also be shown as 806f030d0401ffff or 0x806f030d0401ffff

**Severity:** Info

**Alert Category:** System - Other

**Serviceable:** No

**CIM Information:** **Prefix:** PLAT and **ID:** 0170

**SNMP Trap ID:**

**Automatically notify Support:** No

**User response:** No action; information only.

---

**806f030d-0402ffff Hot Spare enabled for [ComputerSystemElementName]. (Drive 2)**

**Explanation:** This message is for the use case when an implementation has detected a Hot Spare has been Enabled.

May also be shown as 806f030d0402ffff or 0x806f030d0402ffff

**Severity:** Info

**Alert Category:** System - Other

**Serviceable:** No

**CIM Information:** **Prefix:** PLAT and **ID:** 0170

**SNMP Trap ID:**

**Automatically notify Support:** No

**User response:** No action; information only.

**806f030d-0403ffff Hot Spare enabled for [ComputerSystemElementName]. (Drive 3)**

**Explanation:** This message is for the use case when an implementation has detected a Hot Spare has been Enabled.

May also be shown as 806f030d0403ffff or 0x806f030d0403ffff

**Severity:** Info

**Alert Category:** System - Other

**Serviceable:** No

**CIM Information:** **Prefix:** PLAT and **ID:** 0170

**SNMP Trap ID:**

**Automatically notify Support:** No

**User response:** No action; information only.

---

**806f030d-0404ffff Hot Spare enabled for [ComputerSystemElementName]. (Drive 4)**

**Explanation:** This message is for the use case when an implementation has detected a Hot Spare has been Enabled.

May also be shown as 806f030d0404ffff or 0x806f030d0404ffff

**Severity:** Info

**Alert Category:** System - Other

**Serviceable:** No

**CIM Information:** **Prefix:** PLAT and **ID:** 0170

**SNMP Trap ID:**

**Automatically notify Support:** No

**User response:** No action; information only.

---

**806f030d-0405ffff Hot Spare enabled for [ComputerSystemElementName]. (Drive 5)**

**Explanation:** This message is for the use case when an implementation has detected a Hot Spare has been Enabled.

May also be shown as 806f030d0405ffff or 0x806f030d0405ffff

**Severity:** Info

**Alert Category:** System - Other

**Serviceable:** No

**CIM Information:** **Prefix:** PLAT and **ID:** 0170

**SNMP Trap ID:**

**Automatically notify Support:** No

**User response:** No action; information only.

**806f030d-0406ffff Hot Spare enabled for [ComputerSystemElementName]. (Drive 6)**

**Explanation:** This message is for the use case when an implementation has detected a Hot Spare has been Enabled.

May also be shown as 806f030d0406ffff or 0x806f030d0406ffff

**Severity:** Info

**Alert Category:** System - Other

**Serviceable:** No

**CIM Information:** **Prefix:** PLAT and **ID:** 0170

**SNMP Trap ID:**

**Automatically notify Support:** No

**User response:** No action; information only.

---

**806f030d-0407ffff Hot Spare enabled for [ComputerSystemElementName]. (Drive 7)**

**Explanation:** This message is for the use case when an implementation has detected a Hot Spare has been Enabled.

May also be shown as 806f030d0407ffff or 0x806f030d0407ffff

**Severity:** Info

**Alert Category:** System - Other

**Serviceable:** No

**CIM Information:** **Prefix:** PLAT and **ID:** 0170

**SNMP Trap ID:**

**Automatically notify Support:** No

**User response:** No action; information only.

---

**806f030d-0408ffff Hot Spare enabled for [ComputerSystemElementName]. (Drive 8)**

**Explanation:** This message is for the use case when an implementation has detected a Hot Spare has been Enabled.

May also be shown as 806f030d0408ffff or 0x806f030d0408ffff

**Severity:** Info

**Alert Category:** System - Other

**Serviceable:** No

**CIM Information:** **Prefix:** PLAT and **ID:** 0170

**SNMP Trap ID:**

**Automatically notify Support:** No

**User response:** No action; information only.

**806f030d-0409ffff Hot Spare enabled for [ComputerSystemElementName]. (Drive 9)**

**Explanation:** This message is for the use case when an implementation has detected a Hot Spare has been Enabled.

May also be shown as 806f030d0409ffff or 0x806f030d0409ffff

**Severity:** Info

**Alert Category:** System - Other

**Serviceable:** No

**CIM Information:** **Prefix:** PLAT and **ID:** 0170

**SNMP Trap ID:**

**Automatically notify Support:** No

**User response:** No action; information only.

---

**806f030d-040affff Hot Spare enabled for [ComputerSystemElementName]. (Drive 10)**

**Explanation:** This message is for the use case when an implementation has detected a Hot Spare has been Enabled.

May also be shown as 806f030d040affff or 0x806f030d040affff

**Severity:** Info

**Alert Category:** System - Other

**Serviceable:** No

**CIM Information:** **Prefix:** PLAT and **ID:** 0170

**SNMP Trap ID:**

**Automatically notify Support:** No

**User response:** No action; information only.

---

**806f030d-040bffff Hot Spare enabled for [ComputerSystemElementName]. (Drive 11)**

**Explanation:** This message is for the use case when an implementation has detected a Hot Spare has been Enabled.

May also be shown as 806f030d040bffff or 0x806f030d040bffff

**Severity:** Info

**Alert Category:** System - Other

**Serviceable:** No

**CIM Information:** **Prefix:** PLAT and **ID:** 0170

**SNMP Trap ID:**

**Automatically notify Support:** No

**User response:** No action; information only.

**806f030d-040cffff Hot Spare enabled for [ComputerSystemElementName]. (Drive 12)**

**Explanation:** This message is for the use case when an implementation has detected a Hot Spare has been Enabled. May also be shown as 806f030d040cffff or 0x806f030d040cffff

**Severity:** Info

**Alert Category:** System - Other

**Serviceable:** No

**CIM Information:** **Prefix:** PLAT and **ID:** 0170

**SNMP Trap ID:**

**Automatically notify Support:** No

**User response:** No action; information only.

---

**806f030d-040dffff Hot Spare enabled for [ComputerSystemElementName]. (Drive 13)**

**Explanation:** This message is for the use case when an implementation has detected a Hot Spare has been Enabled. May also be shown as 806f030d040dffff or 0x806f030d040dffff

**Severity:** Info

**Alert Category:** System - Other

**Serviceable:** No

**CIM Information:** **Prefix:** PLAT and **ID:** 0170

**SNMP Trap ID:**

**Automatically notify Support:** No

**User response:** No action; information only.

---

**806f030d-040effff Hot Spare enabled for [ComputerSystemElementName]. (Drive 14)**

**Explanation:** This message is for the use case when an implementation has detected a Hot Spare has been Enabled. May also be shown as 806f030d040effff or 0x806f030d040effff

**Severity:** Info

**Alert Category:** System - Other

**Serviceable:** No

**CIM Information:** **Prefix:** PLAT and **ID:** 0170

**SNMP Trap ID:**

**Automatically notify Support:** No

**User response:** No action; information only.

**806f030d-040fffff Hot Spare enabled for [ComputerSystemElementName]. (Drive 15)**

**Explanation:** This message is for the use case when an implementation has detected a Hot Spare has been Enabled.

May also be shown as 806f030d040fffff or 0x806f030d040fffff

**Severity:** Info

**Alert Category:** System - Other

**Serviceable:** No

**CIM Information:** **Prefix:** PLAT and **ID:** 0170

**SNMP Trap ID:**

**Automatically notify Support:** No

**User response:** No action; information only.

---

**806f030d-0410ffff Hot Spare enabled for [ComputerSystemElementName]. (Drive 16)**

**Explanation:** This message is for the use case when an implementation has detected a Hot Spare has been Enabled.

May also be shown as 806f030d0410ffff or 0x806f030d0410ffff

**Severity:** Info

**Alert Category:** System - Other

**Serviceable:** No

**CIM Information:** **Prefix:** PLAT and **ID:** 0170

**SNMP Trap ID:**

**Automatically notify Support:** No

**User response:** No action; information only.

---

**806f030d-0411ffff Hot Spare enabled for [ComputerSystemElementName]. (Drive 17)**

**Explanation:** This message is for the use case when an implementation has detected a Hot Spare has been Enabled.

May also be shown as 806f030d0411ffff or 0x806f030d0411ffff

**Severity:** Info

**Alert Category:** System - Other

**Serviceable:** No

**CIM Information:** **Prefix:** PLAT and **ID:** 0170

**SNMP Trap ID:**

**Automatically notify Support:** No

**User response:** No action; information only.

**806f030d-0412ffff Hot Spare enabled for [ComputerSystemElementName]. (Drive 18)**

**Explanation:** This message is for the use case when an implementation has detected a Hot Spare has been Enabled.

May also be shown as 806f030d0412ffff or 0x806f030d0412ffff

**Severity:** Info

**Alert Category:** System - Other

**Serviceable:** No

**CIM Information:** **Prefix:** PLAT and **ID:** 0170

**SNMP Trap ID:**

**Automatically notify Support:** No

**User response:** No action; information only.

---

**806f030d-0413ffff Hot Spare enabled for [ComputerSystemElementName]. (Drive 19)**

**Explanation:** This message is for the use case when an implementation has detected a Hot Spare has been Enabled.

May also be shown as 806f030d0413ffff or 0x806f030d0413ffff

**Severity:** Info

**Alert Category:** System - Other

**Serviceable:** No

**CIM Information:** **Prefix:** PLAT and **ID:** 0170

**SNMP Trap ID:**

**Automatically notify Support:** No

**User response:** No action; information only.

---

**806f030d-0414ffff Hot Spare enabled for [ComputerSystemElementName]. (Drive 20)**

**Explanation:** This message is for the use case when an implementation has detected a Hot Spare has been Enabled.

May also be shown as 806f030d0414ffff or 0x806f030d0414ffff

**Severity:** Info

**Alert Category:** System - Other

**Serviceable:** No

**CIM Information:** **Prefix:** PLAT and **ID:** 0170

**SNMP Trap ID:**

**Automatically notify Support:** No

**User response:** No action; information only.

**806f030d-0415ffff Hot Spare enabled for [ComputerSystemElementName]. (Drive 21)**

**Explanation:** This message is for the use case when an implementation has detected a Hot Spare has been Enabled.

May also be shown as 806f030d0415ffff or 0x806f030d0415ffff

**Severity:** Info

**Alert Category:** System - Other

**Serviceable:** No

**CIM Information:** **Prefix:** PLAT and **ID:** 0170

**SNMP Trap ID:**

**Automatically notify Support:** No

**User response:** No action; information only.

---

**806f030d-0416ffff Hot Spare enabled for [ComputerSystemElementName]. (Drive 22)**

**Explanation:** This message is for the use case when an implementation has detected a Hot Spare has been Enabled.

May also be shown as 806f030d0416ffff or 0x806f030d0416ffff

**Severity:** Info

**Alert Category:** System - Other

**Serviceable:** No

**CIM Information:** **Prefix:** PLAT and **ID:** 0170

**SNMP Trap ID:**

**Automatically notify Support:** No

**User response:** No action; information only.

---

**806f030d-0417ffff Hot Spare enabled for [ComputerSystemElementName]. (Drive 23)**

**Explanation:** This message is for the use case when an implementation has detected a Hot Spare has been Enabled.

May also be shown as 806f030d0417ffff or 0x806f030d0417ffff

**Severity:** Info

**Alert Category:** System - Other

**Serviceable:** No

**CIM Information:** **Prefix:** PLAT and **ID:** 0170

**SNMP Trap ID:**

**Automatically notify Support:** No

**User response:** No action; information only.

**806f030d-0418ffff Hot Spare enabled for [ComputerSystemElementName]. (Drive 24)**

**Explanation:** This message is for the use case when an implementation has detected a Hot Spare has been Enabled.

May also be shown as 806f030d0418ffff or 0x806f030d0418ffff

**Severity:** Info

**Alert Category:** System - Other

**Serviceable:** No

**CIM Information:** **Prefix:** PLAT and **ID:** 0170

**SNMP Trap ID:**

**Automatically notify Support:** No

**User response:** No action; information only.

---

**806f030d-0419ffff Hot Spare enabled for [ComputerSystemElementName]. (Drive 25)**

**Explanation:** This message is for the use case when an implementation has detected a Hot Spare has been Enabled.

May also be shown as 806f030d0419ffff or 0x806f030d0419ffff

**Severity:** Info

**Alert Category:** System - Other

**Serviceable:** No

**CIM Information:** **Prefix:** PLAT and **ID:** 0170

**SNMP Trap ID:**

**Automatically notify Support:** No

**User response:** No action; information only.

---

**806f030d-041affff Hot Spare enabled for [ComputerSystemElementName]. (Drive 26)**

**Explanation:** This message is for the use case when an implementation has detected a Hot Spare has been Enabled.

May also be shown as 806f030d041affff or 0x806f030d041affff

**Severity:** Info

**Alert Category:** System - Other

**Serviceable:** No

**CIM Information:** **Prefix:** PLAT and **ID:** 0170

**SNMP Trap ID:**

**Automatically notify Support:** No

**User response:** No action; information only.

**806f030d-041bffff Hot Spare enabled for [ComputerSystemElementName]. (Drive 27)**

**Explanation:** This message is for the use case when an implementation has detected a Hot Spare has been Enabled.

May also be shown as 806f030d041bffff or 0x806f030d041bffff

**Severity:** Info

**Alert Category:** System - Other

**Serviceable:** No

**CIM Information:** **Prefix:** PLAT and **ID:** 0170

**SNMP Trap ID:**

**Automatically notify Support:** No

**User response:** No action; information only.

---

**806f030d-041cffff Hot Spare enabled for [ComputerSystemElementName]. (Drive 28)**

**Explanation:** This message is for the use case when an implementation has detected a Hot Spare has been Enabled.

May also be shown as 806f030d041cffff or 0x806f030d041cffff

**Severity:** Info

**Alert Category:** System - Other

**Serviceable:** No

**CIM Information:** **Prefix:** PLAT and **ID:** 0170

**SNMP Trap ID:**

**Automatically notify Support:** No

**User response:** No action; information only.

---

**806f030d-041dffff Hot Spare enabled for [ComputerSystemElementName]. (Drive 29)**

**Explanation:** This message is for the use case when an implementation has detected a Hot Spare has been Enabled.

May also be shown as 806f030d041dffff or 0x806f030d041dffff

**Severity:** Info

**Alert Category:** System - Other

**Serviceable:** No

**CIM Information:** **Prefix:** PLAT and **ID:** 0170

**SNMP Trap ID:**

**Automatically notify Support:** No

**User response:** No action; information only.

**806f030d-041effff Hot Spare enabled for [ComputerSystemElementName]. (Drive 30)**

**Explanation:** This message is for the use case when an implementation has detected a Hot Spare has been Enabled.

May also be shown as 806f030d041effff or 0x806f030d041effff

**Severity:** Info

**Alert Category:** System - Other

**Serviceable:** No

**CIM Information:** **Prefix:** PLAT and **ID:** 0170

**SNMP Trap ID:**

**Automatically notify Support:** No

**User response:** No action; information only.

---

**806f030d-041fffff Hot Spare enabled for [ComputerSystemElementName]. (Drive 31)**

**Explanation:** This message is for the use case when an implementation has detected a Hot Spare has been Enabled.

May also be shown as 806f030d041fffff or 0x806f030d041fffff

**Severity:** Info

**Alert Category:** System - Other

**Serviceable:** No

**CIM Information:** **Prefix:** PLAT and **ID:** 0170

**SNMP Trap ID:**

**Automatically notify Support:** No

**User response:** No action; information only.

---

**806f0313-1701ffff A software NMI has occurred on system [ComputerSystemElementName]. (NMI State)**

**Explanation:** This message is for the use case when an implementation has detected a Software NMI.

May also be shown as 806f03131701ffff or 0x806f03131701ffff

**Severity:** Error

**Alert Category:** Critical - Other

**Serviceable:** Yes

**CIM Information:** **Prefix:** PLAT and **ID:** 0228

**SNMP Trap ID:** 50

**Automatically notify Support:** No

**User response:**

1. Check the device driver.
2. Reinstall the device driver.
3. Update all device drivers to the latest level.
4. Update the firmware (UEFI and IMM).

**806f0323-2101ffff Power cycle of system [ComputerSystemElementName] initiated by watchdog [WatchdogElementName]. (IPMI Watchdog)**

**Explanation:** This message is for the use case when an implementation has detected a Power Cycle by Watchdog occurred.

May also be shown as 806f03232101ffff or 0x806f03232101ffff

**Severity:** Info

**Alert Category:** System - Other

**Serviceable:** No

**CIM Information:** **Prefix:** PLAT and **ID:** 0374

**SNMP Trap ID:**

**Automatically notify Support:** No

**User response:** No action; information only.

---

**806f040c-2001ffff [PhysicalMemoryElementName] Disabled on Subsystem [MemoryElementName]. (DIMM 1)**

**Explanation:** This message is for the use case when an implementation has detected that Memory has been Disabled.

May also be shown as 806f040c2001ffff or 0x806f040c2001ffff

**Severity:** Info

**Alert Category:** System - Other

**Serviceable:** No

**CIM Information:** **Prefix:** PLAT and **ID:** 0131

**SNMP Trap ID:**

**Automatically notify Support:** No

**User response:**

1. Make sure the DIMM is installed correctly.
2. If the DIMM was disabled because of a memory fault (memory uncorrectable error or memory logging limit reached), follow the suggested actions for that error event and restart the server.
3. Check the IBM support website for an applicable retain tip or firmware update that applies to this memory event. If no memory fault is recorded in the logs and no DIMM connector error LED is lit, you can re-enable the DIMM through the Setup utility or the Advanced Settings Utility (ASU).

**806f040c-2002ffff [PhysicalMemoryElementName] Disabled on Subsystem [MemoryElementName]. (DIMM 2)**

**Explanation:** This message is for the use case when an implementation has detected that Memory has been Disabled.

May also be shown as 806f040c2002ffff or 0x806f040c2002ffff

**Severity:** Info

**Alert Category:** System - Other

**Serviceable:** No

**CIM Information:** **Prefix:** PLAT and **ID:** 0131

**SNMP Trap ID:**

**Automatically notify Support:** No

**User response:**

1. Make sure the DIMM is installed correctly.
2. If the DIMM was disabled because of a memory fault (memory uncorrectable error or memory logging limit reached), follow the suggested actions for that error event and restart the server.
3. Check the IBM support website for an applicable retain tip or firmware update that applies to this memory event. If no memory fault is recorded in the logs and no DIMM connector error LED is lit, you can re-enable the DIMM through the Setup utility or the Advanced Settings Utility (ASU).

**806f040c-2003ffff [PhysicalMemoryElementName] Disabled on Subsystem [MemoryElementName]. (DIMM 3)**

**Explanation:** This message is for the use case when an implementation has detected that Memory has been Disabled.

May also be shown as 806f040c2003ffff or 0x806f040c2003ffff

**Severity:** Info

**Alert Category:** System - Other

**Serviceable:** No

**CIM Information:** **Prefix:** PLAT and **ID:** 0131

**SNMP Trap ID:**

**Automatically notify Support:** No

**User response:**

1. Make sure the DIMM is installed correctly.
2. If the DIMM was disabled because of a memory fault (memory uncorrectable error or memory logging limit reached), follow the suggested actions for that error event and restart the server.
3. Check the IBM support website for an applicable retain tip or firmware update that applies to this memory event. If no memory fault is recorded in the logs and no DIMM connector error LED is lit, you can re-enable the DIMM through the Setup utility or the Advanced Settings Utility (ASU).

**806f040c-2004ffff [PhysicalMemoryElementName] Disabled on Subsystem [MemoryElementName]. (DIMM 4)**

**Explanation:** This message is for the use case when an implementation has detected that Memory has been Disabled.

May also be shown as 806f040c2004ffff or 0x806f040c2004ffff

**Severity:** Info

**Alert Category:** System - Other

**Serviceable:** No

**CIM Information:** **Prefix:** PLAT and **ID:** 0131

**SNMP Trap ID:**

**Automatically notify Support:** No

**User response:**

1. Make sure the DIMM is installed correctly.
2. If the DIMM was disabled because of a memory fault (memory uncorrectable error or memory logging limit reached), follow the suggested actions for that error event and restart the server.
3. Check the IBM support website for an applicable retain tip or firmware update that applies to this memory event. If no memory fault is recorded in the logs and no DIMM connector error LED is lit, you can re-enable the DIMM through the Setup utility or the Advanced Settings Utility (ASU).

**806f040c-2005ffff [PhysicalMemoryElementName] Disabled on Subsystem [MemoryElementName]. (DIMM 5)**

**Explanation:** This message is for the use case when an implementation has detected that Memory has been Disabled.

May also be shown as 806f040c2005ffff or 0x806f040c2005ffff

**Severity:** Info

**Alert Category:** System - Other

**Serviceable:** No

**CIM Information:** **Prefix:** PLAT and **ID:** 0131

**SNMP Trap ID:**

**Automatically notify Support:** No

**User response:**

1. Make sure the DIMM is installed correctly.
2. If the DIMM was disabled because of a memory fault (memory uncorrectable error or memory logging limit reached), follow the suggested actions for that error event and restart the server.
3. Check the IBM support website for an applicable retain tip or firmware update that applies to this memory event. If no memory fault is recorded in the logs and no DIMM connector error LED is lit, you can re-enable the DIMM through the Setup utility or the Advanced Settings Utility (ASU).

**806f040c-2006ffff [PhysicalMemoryElementName] Disabled on Subsystem [MemoryElementName]. (DIMM 6)**

**Explanation:** This message is for the use case when an implementation has detected that Memory has been Disabled.

May also be shown as 806f040c2006ffff or 0x806f040c2006ffff

**Severity:** Info

**Alert Category:** System - Other

**Serviceable:** No

**CIM Information:** **Prefix:** PLAT and **ID:** 0131

**SNMP Trap ID:**

**Automatically notify Support:** No

**User response:**

1. Make sure the DIMM is installed correctly.
2. If the DIMM was disabled because of a memory fault (memory uncorrectable error or memory logging limit reached), follow the suggested actions for that error event and restart the server.
3. Check the IBM support website for an applicable retain tip or firmware update that applies to this memory event. If no memory fault is recorded in the logs and no DIMM connector error LED is lit, you can re-enable the DIMM through the Setup utility or the Advanced Settings Utility (ASU).

**806f040c-2007ffff [PhysicalMemoryElementName] Disabled on Subsystem [MemoryElementName]. (DIMM 7)**

**Explanation:** This message is for the use case when an implementation has detected that Memory has been Disabled.

May also be shown as 806f040c2007ffff or 0x806f040c2007ffff

**Severity:** Info

**Alert Category:** System - Other

**Serviceable:** No

**CIM Information:** **Prefix:** PLAT and **ID:** 0131

**SNMP Trap ID:**

**Automatically notify Support:** No

**User response:**

1. Make sure the DIMM is installed correctly.
2. If the DIMM was disabled because of a memory fault (memory uncorrectable error or memory logging limit reached), follow the suggested actions for that error event and restart the server.
3. Check the IBM support website for an applicable retain tip or firmware update that applies to this memory event. If no memory fault is recorded in the logs and no DIMM connector error LED is lit, you can re-enable the DIMM through the Setup utility or the Advanced Settings Utility (ASU).

**806f040c-2008ffff [PhysicalMemoryElementName] Disabled on Subsystem [MemoryElementName]. (DIMM 8)**

**Explanation:** This message is for the use case when an implementation has detected that Memory has been Disabled.

May also be shown as 806f040c2008ffff or 0x806f040c2008ffff

**Severity:** Info

**Alert Category:** System - Other

**Serviceable:** No

**CIM Information:** **Prefix:** PLAT and **ID:** 0131

**SNMP Trap ID:**

**Automatically notify Support:** No

**User response:**

1. Make sure the DIMM is installed correctly.
2. If the DIMM was disabled because of a memory fault (memory uncorrectable error or memory logging limit reached), follow the suggested actions for that error event and restart the server.
3. Check the IBM support website for an applicable retain tip or firmware update that applies to this memory event. If no memory fault is recorded in the logs and no DIMM connector error LED is lit, you can re-enable the DIMM through the Setup utility or the Advanced Settings Utility (ASU).

**806f040c-2009ffff [PhysicalMemoryElementName] Disabled on Subsystem [MemoryElementName]. (DIMM 9)**

**Explanation:** This message is for the use case when an implementation has detected that Memory has been Disabled.

May also be shown as 806f040c2009ffff or 0x806f040c2009ffff

**Severity:** Info

**Alert Category:** System - Other

**Serviceable:** No

**CIM Information:** **Prefix:** PLAT and **ID:** 0131

**SNMP Trap ID:**

**Automatically notify Support:** No

**User response:**

1. Make sure the DIMM is installed correctly.
2. If the DIMM was disabled because of a memory fault (memory uncorrectable error or memory logging limit reached), follow the suggested actions for that error event and restart the server.
3. Check the IBM support website for an applicable retain tip or firmware update that applies to this memory event. If no memory fault is recorded in the logs and no DIMM connector error LED is lit, you can re-enable the DIMM through the Setup utility or the Advanced Settings Utility (ASU).

**806f040c-200affff [PhysicalMemoryElementName] Disabled on Subsystem [MemoryElementName]. (DIMM 10)**

**Explanation:** This message is for the use case when an implementation has detected that Memory has been Disabled.

May also be shown as 806f040c200affff or 0x806f040c200affff

**Severity:** Info

**Alert Category:** System - Other

**Serviceable:** No

**CIM Information:** **Prefix:** PLAT and **ID:** 0131

**SNMP Trap ID:**

**Automatically notify Support:** No

**User response:**

1. Make sure the DIMM is installed correctly.
2. If the DIMM was disabled because of a memory fault (memory uncorrectable error or memory logging limit reached), follow the suggested actions for that error event and restart the server.
3. Check the IBM support website for an applicable retain tip or firmware update that applies to this memory event. If no memory fault is recorded in the logs and no DIMM connector error LED is lit, you can re-enable the DIMM through the Setup utility or the Advanced Settings Utility (ASU).

**806f040c-200bffff [PhysicalMemoryElementName] Disabled on Subsystem [MemoryElementName]. (DIMM 11)**

**Explanation:** This message is for the use case when an implementation has detected that Memory has been Disabled.

May also be shown as 806f040c200bffff or 0x806f040c200bffff

**Severity:** Info

**Alert Category:** System - Other

**Serviceable:** No

**CIM Information:** **Prefix:** PLAT and **ID:** 0131

**SNMP Trap ID:**

**Automatically notify Support:** No

**User response:**

1. Make sure the DIMM is installed correctly.
2. If the DIMM was disabled because of a memory fault (memory uncorrectable error or memory logging limit reached), follow the suggested actions for that error event and restart the server.
3. Check the IBM support website for an applicable retain tip or firmware update that applies to this memory event. If no memory fault is recorded in the logs and no DIMM connector error LED is lit, you can re-enable the DIMM through the Setup utility or the Advanced Settings Utility (ASU).

**806f040c-200cffff [PhysicalMemoryElementName] Disabled on Subsystem [MemoryElementName]. (DIMM 12)**

**Explanation:** This message is for the use case when an implementation has detected that Memory has been Disabled.

May also be shown as 806f040c200cffff or 0x806f040c200cffff

**Severity:** Info

**Alert Category:** System - Other

**Serviceable:** No

**CIM Information:** **Prefix:** PLAT and **ID:** 0131

**SNMP Trap ID:**

**Automatically notify Support:** No

**User response:**

1. Make sure the DIMM is installed correctly.
2. If the DIMM was disabled because of a memory fault (memory uncorrectable error or memory logging limit reached), follow the suggested actions for that error event and restart the server.
3. Check the IBM support website for an applicable retain tip or firmware update that applies to this memory event. If no memory fault is recorded in the logs and no DIMM connector error LED is lit, you can re-enable the DIMM through the Setup utility or the Advanced Settings Utility (ASU).

**806f040c-200dffff [PhysicalMemoryElementName] Disabled on Subsystem [MemoryElementName]. (DIMM 13)**

**Explanation:** This message is for the use case when an implementation has detected that Memory has been Disabled.

May also be shown as 806f040c200dffff or 0x806f040c200dffff

**Severity:** Info

**Alert Category:** System - Other

**Serviceable:** No

**CIM Information:** **Prefix:** PLAT and **ID:** 0131

**SNMP Trap ID:**

**Automatically notify Support:** No

**User response:**

1. Make sure the DIMM is installed correctly.
2. If the DIMM was disabled because of a memory fault (memory uncorrectable error or memory logging limit reached), follow the suggested actions for that error event and restart the server.
3. Check the IBM support website for an applicable retain tip or firmware update that applies to this memory event. If no memory fault is recorded in the logs and no DIMM connector error LED is lit, you can re-enable the DIMM through the Setup utility or the Advanced Settings Utility (ASU).

**806f040c-200effff [PhysicalMemoryElementName] Disabled on Subsystem [MemoryElementName]. (DIMM 14)**

**Explanation:** This message is for the use case when an implementation has detected that Memory has been Disabled.

May also be shown as 806f040c200effff or 0x806f040c200effff

**Severity:** Info

**Alert Category:** System - Other

**Serviceable:** No

**CIM Information:** **Prefix:** PLAT and **ID:** 0131

**SNMP Trap ID:**

**Automatically notify Support:** No

**User response:**

1. Make sure the DIMM is installed correctly.
2. If the DIMM was disabled because of a memory fault (memory uncorrectable error or memory logging limit reached), follow the suggested actions for that error event and restart the server.
3. Check the IBM support website for an applicable retain tip or firmware update that applies to this memory event. If no memory fault is recorded in the logs and no DIMM connector error LED is lit, you can re-enable the DIMM through the Setup utility or the Advanced Settings Utility (ASU).

**806f040c-200fffff [PhysicalMemoryElementName] Disabled on Subsystem [MemoryElementName]. (DIMM 15)**

**Explanation:** This message is for the use case when an implementation has detected that Memory has been Disabled.

May also be shown as 806f040c200fffff or 0x806f040c200fffff

**Severity:** Info

**Alert Category:** System - Other

**Serviceable:** No

**CIM Information:** **Prefix:** PLAT and **ID:** 0131

**SNMP Trap ID:**

**Automatically notify Support:** No

**User response:**

1. Make sure the DIMM is installed correctly.
2. If the DIMM was disabled because of a memory fault (memory uncorrectable error or memory logging limit reached), follow the suggested actions for that error event and restart the server.
3. Check the IBM support website for an applicable retain tip or firmware update that applies to this memory event. If no memory fault is recorded in the logs and no DIMM connector error LED is lit, you can re-enable the DIMM through the Setup utility or the Advanced Settings Utility (ASU).

**806f040c-2010ffff [PhysicalMemoryElementName] Disabled on Subsystem [MemoryElementName]. (DIMM 16)**

**Explanation:** This message is for the use case when an implementation has detected that Memory has been Disabled.

May also be shown as 806f040c2010ffff or 0x806f040c2010ffff

**Severity:** Info

**Alert Category:** System - Other

**Serviceable:** No

**CIM Information:** **Prefix:** PLAT and **ID:** 0131

**SNMP Trap ID:**

**Automatically notify Support:** No

**User response:**

1. Make sure the DIMM is installed correctly.
2. If the DIMM was disabled because of a memory fault (memory uncorrectable error or memory logging limit reached), follow the suggested actions for that error event and restart the server.
3. Check the IBM support website for an applicable retain tip or firmware update that applies to this memory event. If no memory fault is recorded in the logs and no DIMM connector error LED is lit, you can re-enable the DIMM through the Setup utility or the Advanced Settings Utility (ASU).

**806f040c-2011ffff [PhysicalMemoryElementName] Disabled on Subsystem [MemoryElementName]. (DIMM 17)**

**Explanation:** This message is for the use case when an implementation has detected that Memory has been Disabled.

May also be shown as 806f040c2011ffff or 0x806f040c2011ffff

**Severity:** Info

**Alert Category:** System - Other

**Serviceable:** No

**CIM Information:** **Prefix:** PLAT and **ID:** 0131

**SNMP Trap ID:**

**Automatically notify Support:** No

**User response:**

1. Make sure the DIMM is installed correctly.
2. If the DIMM was disabled because of a memory fault (memory uncorrectable error or memory logging limit reached), follow the suggested actions for that error event and restart the server.
3. Check the IBM support website for an applicable retain tip or firmware update that applies to this memory event. If no memory fault is recorded in the logs and no DIMM connector error LED is lit, you can re-enable the DIMM through the Setup utility or the Advanced Settings Utility (ASU).

**806f040c-2012ffff [PhysicalMemoryElementName] Disabled on Subsystem [MemoryElementName]. (DIMM 18)**

**Explanation:** This message is for the use case when an implementation has detected that Memory has been Disabled.

May also be shown as 806f040c2012ffff or 0x806f040c2012ffff

**Severity:** Info

**Alert Category:** System - Other

**Serviceable:** No

**CIM Information:** **Prefix:** PLAT and **ID:** 0131

**SNMP Trap ID:**

**Automatically notify Support:** No

**User response:**

1. Make sure the DIMM is installed correctly.
2. If the DIMM was disabled because of a memory fault (memory uncorrectable error or memory logging limit reached), follow the suggested actions for that error event and restart the server.
3. Check the IBM support website for an applicable retain tip or firmware update that applies to this memory event. If no memory fault is recorded in the logs and no DIMM connector error LED is lit, you can re-enable the DIMM through the Setup utility or the Advanced Settings Utility (ASU).

**806f040c-2013ffff [PhysicalMemoryElementName] Disabled on Subsystem [MemoryElementName]. (DIMM 19)**

**Explanation:** This message is for the use case when an implementation has detected that Memory has been Disabled.

May also be shown as 806f040c2013ffff or 0x806f040c2013ffff

**Severity:** Info

**Alert Category:** System - Other

**Serviceable:** No

**CIM Information:** **Prefix:** PLAT and **ID:** 0131

**SNMP Trap ID:**

**Automatically notify Support:** No

**User response:**

1. Make sure the DIMM is installed correctly.
2. If the DIMM was disabled because of a memory fault (memory uncorrectable error or memory logging limit reached), follow the suggested actions for that error event and restart the server.
3. Check the IBM support website for an applicable retain tip or firmware update that applies to this memory event. If no memory fault is recorded in the logs and no DIMM connector error LED is lit, you can re-enable the DIMM through the Setup utility or the Advanced Settings Utility (ASU).

**806f040c-2014ffff [PhysicalMemoryElementName] Disabled on Subsystem [MemoryElementName]. (DIMM 20)**

**Explanation:** This message is for the use case when an implementation has detected that Memory has been Disabled.

May also be shown as 806f040c2014ffff or 0x806f040c2014ffff

**Severity:** Info

**Alert Category:** System - Other

**Serviceable:** No

**CIM Information:** **Prefix:** PLAT and **ID:** 0131

**SNMP Trap ID:**

**Automatically notify Support:** No

**User response:**

1. Make sure the DIMM is installed correctly.
2. If the DIMM was disabled because of a memory fault (memory uncorrectable error or memory logging limit reached), follow the suggested actions for that error event and restart the server.
3. Check the IBM support website for an applicable retain tip or firmware update that applies to this memory event. If no memory fault is recorded in the logs and no DIMM connector error LED is lit, you can re-enable the DIMM through the Setup utility or the Advanced Settings Utility (ASU).

**806f040c-2015ffff [PhysicalMemoryElementName] Disabled on Subsystem [MemoryElementName]. (DIMM 21)**

**Explanation:** This message is for the use case when an implementation has detected that Memory has been Disabled.

May also be shown as 806f040c2015ffff or 0x806f040c2015ffff

**Severity:** Info

**Alert Category:** System - Other

**Serviceable:** No

**CIM Information:** **Prefix:** PLAT and **ID:** 0131

**SNMP Trap ID:**

**Automatically notify Support:** No

**User response:**

1. Make sure the DIMM is installed correctly.
2. If the DIMM was disabled because of a memory fault (memory uncorrectable error or memory logging limit reached), follow the suggested actions for that error event and restart the server.
3. Check the IBM support website for an applicable retain tip or firmware update that applies to this memory event. If no memory fault is recorded in the logs and no DIMM connector error LED is lit, you can re-enable the DIMM through the Setup utility or the Advanced Settings Utility (ASU).

**806f040c-2016ffff [PhysicalMemoryElementName] Disabled on Subsystem [MemoryElementName]. (DIMM 22)**

**Explanation:** This message is for the use case when an implementation has detected that Memory has been Disabled.

May also be shown as 806f040c2016ffff or 0x806f040c2016ffff

**Severity:** Info

**Alert Category:** System - Other

**Serviceable:** No

**CIM Information:** **Prefix:** PLAT and **ID:** 0131

**SNMP Trap ID:**

**Automatically notify Support:** No

**User response:**

1. Make sure the DIMM is installed correctly.
2. If the DIMM was disabled because of a memory fault (memory uncorrectable error or memory logging limit reached), follow the suggested actions for that error event and restart the server.
3. Check the IBM support website for an applicable retain tip or firmware update that applies to this memory event. If no memory fault is recorded in the logs and no DIMM connector error LED is lit, you can re-enable the DIMM through the Setup utility or the Advanced Settings Utility (ASU).

**806f040c-2017ffff [PhysicalMemoryElementName] Disabled on Subsystem [MemoryElementName]. (DIMM 23)**

**Explanation:** This message is for the use case when an implementation has detected that Memory has been Disabled.

May also be shown as 806f040c2017ffff or 0x806f040c2017ffff

**Severity:** Info

**Alert Category:** System - Other

**Serviceable:** No

**CIM Information:** **Prefix:** PLAT and **ID:** 0131

**SNMP Trap ID:**

**Automatically notify Support:** No

**User response:**

1. Make sure the DIMM is installed correctly.
2. If the DIMM was disabled because of a memory fault (memory uncorrectable error or memory logging limit reached), follow the suggested actions for that error event and restart the server.
3. Check the IBM support website for an applicable retain tip or firmware update that applies to this memory event. If no memory fault is recorded in the logs and no DIMM connector error LED is lit, you can re-enable the DIMM through the Setup utility or the Advanced Settings Utility (ASU).

**806f040c-2018ffff [PhysicalMemoryElementName] Disabled on Subsystem [MemoryElementName]. (DIMM 24)**

**Explanation:** This message is for the use case when an implementation has detected that Memory has been Disabled.

May also be shown as 806f040c2018ffff or 0x806f040c2018ffff

**Severity:** Info

**Alert Category:** System - Other

**Serviceable:** No

**CIM Information:** **Prefix:** PLAT and **ID:** 0131

**SNMP Trap ID:**

**Automatically notify Support:** No

**User response:**

1. Make sure the DIMM is installed correctly.
2. If the DIMM was disabled because of a memory fault (memory uncorrectable error or memory logging limit reached), follow the suggested actions for that error event and restart the server.
3. Check the IBM support website for an applicable retain tip or firmware update that applies to this memory event. If no memory fault is recorded in the logs and no DIMM connector error LED is lit, you can re-enable the DIMM through the Setup utility or the Advanced Settings Utility (ASU).

**806f040c-2581ffff [PhysicalMemoryElementName] Disabled on Subsystem [MemoryElementName]. (All DIMMS)**

**Explanation:** This message is for the use case when an implementation has detected that Memory has been Disabled.

May also be shown as 806f040c2581ffff or 0x806f040c2581ffff

**Severity:** Info

**Alert Category:** System - Other

**Serviceable:** No

**CIM Information:** **Prefix:** PLAT and **ID:** 0131

**SNMP Trap ID:**

**Automatically notify Support:** No

**User response:**

1. Make sure the DIMM is installed correctly.
2. If the DIMM was disabled because of a memory fault (memory uncorrectable error or memory logging limit reached), follow the suggested actions for that error event and restart the server.
3. Check the IBM support website for an applicable retain tip or firmware update that applies to this memory event. If no memory fault is recorded in the logs and no DIMM connector error LED is lit, you can re-enable the DIMM through the Setup utility or the Advanced Settings Utility (ASU). One of the DIMMs :

**806f0413-2582ffff A PCI PERR has occurred on system [ComputerSystemElementName]. (PCIs)**

**Explanation:** This message is for the use case when an implementation has detected a PCI PERR.

May also be shown as 806f04132582ffff or 0x806f04132582ffff

**Severity:** Error

**Alert Category:** Critical - Other

**Serviceable:** Yes

**CIM Information:** **Prefix:** PLAT and **ID:** 0232

**SNMP Trap ID:** 50

**Automatically notify Support:** No

**User response:**

1. Check the PCI LED.
2. Reseat the affected adapters and riser cards.
3. Update the server firmware (UEFI and IMM) and adapter firmware. Important: Some cluster solutions require specific code levels or coordinated code updates. If the device is part of a cluster solution, verify that the latest level of code is supported for the cluster solution before you update the code.
4. Remove both adapters.
5. Replace the PCIe adapters.
6. Replace the riser card.

**806f0507-0301ffff [ProcessorElementName] has a Configuration Mismatch. (CPU 1)**

**Explanation:** This message is for the use case when an implementation has detected a Processor Configuration Mismatch has occurred.

May also be shown as 806f05070301ffff or 0x806f05070301ffff

**Severity:** Error

**Alert Category:** Critical - CPU

**Serviceable:** Yes

**CIM Information:** **Prefix:** PLAT and **ID:** 0062

**SNMP Trap ID:** 40

**Automatically notify Support:** No

**User response:**

1. Check for a server firmware update. Important: Some cluster solutions require specific code levels or coordinated code updates. If the device is part of a cluster solution, verify that the latest level of code is supported for the cluster solution before you update the code.
2. Make sure that the installed microprocessors are compatible with each other.
3. (Trained technician only) Reseat microprocessor n.
4. (Trained technician only) Replace microprocessor n. (n = microprocessor number)

**806f0507-0302ffff [ProcessorElementName] has a Configuration Mismatch. (CPU 2)**

**Explanation:** This message is for the use case when an implementation has detected a Processor Configuration Mismatch has occurred.

May also be shown as 806f05070302ffff or 0x806f05070302ffff

**Severity:** Error

**Alert Category:** Critical - CPU

**Serviceable:** Yes

**CIM Information:** **Prefix:** PLAT and **ID:** 0062

**SNMP Trap ID:** 40

**Automatically notify Support:** No

**User response:**

1. Check for a server firmware update. Important: Some cluster solutions require specific code levels or coordinated code updates. If the device is part of a cluster solution, verify that the latest level of code is supported for the cluster solution before you update the code.
2. Make sure that the installed microprocessors are compatible with each other.
3. (Trained technician only) Reseat microprocessor n.
4. (Trained technician only) Replace microprocessor n. (n = microprocessor number)

**806f0507-2584ffff [ProcessorElementName] has a Configuration Mismatch. (All CPUs)**

**Explanation:** This message is for the use case when an implementation has detected a Processor Configuration Mismatch has occurred.

May also be shown as 806f05072584ffff or 0x806f05072584ffff

**Severity:** Error

**Alert Category:** Critical - CPU

**Serviceable:** Yes

**CIM Information:** **Prefix:** PLAT and **ID:** 0062

**SNMP Trap ID:** 40

**Automatically notify Support:** No

**User response:**

1. Check for a server firmware update. Important: Some cluster solutions require specific code levels or coordinated code updates. If the device is part of a cluster solution, verify that the latest level of code is supported for the cluster solution before you update the code.
2. Make sure that the installed microprocessors are compatible with each other.
3. (Trained technician only) Reseat microprocessor n.
4. (Trained technician only) Replace microprocessor n. (n = microprocessor number)

**806f050c-2001ffff Memory Logging Limit Reached for [PhysicalMemoryElementName] on Subsystem [MemoryElementName]. (DIMM 1)**

**Explanation:** This message is for the use case when an implementation has detected that the Memory Logging Limit has been Reached.

May also be shown as 806f050c2001ffff or 0x806f050c2001ffff

**Severity:** Warning

**Alert Category:** Warning - Memory

**Serviceable:** Yes

**CIM Information:** **Prefix:** PLAT and **ID:** 0144

**SNMP Trap ID:** 43

**Automatically notify Support:** Yes

**User response:**

1. Check the IBM support website for an applicable retain tip or firmware update that applies to this memory error.
2. Swap the affected DIMMs (as indicated by the error LEDs on the system board or the event logs) to a different memory channel or microprocessor.
3. If the error still occurs on the same DIMM, replace the affected DIMM.
4. If the problem occurs on the same DIMM connector, check the DIMM connector. If the connector contains any foreign material or is damaged, replace the system board.
5. (Trained technician only) Remove the affected microprocessor and check the microprocessor socket pins for any damaged pins. If a damage is found, replace the system board.
6. (Trained technician only) Replace the affected microprocessor.

**806f050c-2002ffff Memory Logging Limit Reached for [PhysicalMemoryElementName] on Subsystem [MemoryElementName]. (DIMM 2)**

**Explanation:** This message is for the use case when an implementation has detected that the Memory Logging Limit has been Reached.

May also be shown as 806f050c2002ffff or 0x806f050c2002ffff

**Severity:** Warning

**Alert Category:** Warning - Memory

**Serviceable:** Yes

**CIM Information:** **Prefix:** PLAT and **ID:** 0144

**SNMP Trap ID:** 43

**Automatically notify Support:** Yes

**User response:**

1. Check the IBM support website for an applicable retain tip or firmware update that applies to this memory error.
2. Swap the affected DIMMs (as indicated by the error LEDs on the system board or the event logs) to a different memory channel or microprocessor.
3. If the error still occurs on the same DIMM, replace the affected DIMM.
4. If the problem occurs on the same DIMM connector, check the DIMM connector. If the connector contains any foreign material or is damaged, replace the system board.
5. (Trained technician only) Remove the affected microprocessor and check the microprocessor socket pins for any damaged pins. If a damage is found, replace the system board.
6. (Trained technician only) Replace the affected microprocessor.

**806f050c-2003ffff Memory Logging Limit Reached for [PhysicalMemoryElementName] on Subsystem [MemoryElementName]. (DIMM 3)**

**Explanation:** This message is for the use case when an implementation has detected that the Memory Logging Limit has been Reached.

May also be shown as 806f050c2003ffff or 0x806f050c2003ffff

**Severity:** Warning

**Alert Category:** Warning - Memory

**Serviceable:** Yes

**CIM Information:** **Prefix:** PLAT and **ID:** 0144

**SNMP Trap ID:** 43

**Automatically notify Support:** Yes

**User response:**

1. Check the IBM support website for an applicable retain tip or firmware update that applies to this memory error.
2. Swap the affected DIMMs (as indicated by the error LEDs on the system board or the event logs) to a different memory channel or microprocessor.
3. If the error still occurs on the same DIMM, replace the affected DIMM.
4. If the problem occurs on the same DIMM connector, check the DIMM connector. If the connector contains any foreign material or is damaged, replace the system board.
5. (Trained technician only) Remove the affected microprocessor and check the microprocessor socket pins for any damaged pins. If a damage is found, replace the system board.
6. (Trained technician only) Replace the affected microprocessor.

**806f050c-2004ffff Memory Logging Limit Reached for [PhysicalMemoryElementName] on Subsystem [MemoryElementName]. (DIMM 4)**

**Explanation:** This message is for the use case when an implementation has detected that the Memory Logging Limit has been Reached.

May also be shown as 806f050c2004ffff or 0x806f050c2004ffff

**Severity:** Warning

**Alert Category:** Warning - Memory

**Serviceable:** Yes

**CIM Information:** **Prefix:** PLAT and **ID:** 0144

**SNMP Trap ID:** 43

**Automatically notify Support:** Yes

**User response:**

1. Check the IBM support website for an applicable retain tip or firmware update that applies to this memory error.
2. Swap the affected DIMMs (as indicated by the error LEDs on the system board or the event logs) to a different memory channel or microprocessor.
3. If the error still occurs on the same DIMM, replace the affected DIMM.
4. If the problem occurs on the same DIMM connector, check the DIMM connector. If the connector contains any foreign material or is damaged, replace the system board.
5. (Trained technician only) Remove the affected microprocessor and check the microprocessor socket pins for any damaged pins. If a damage is found, replace the system board.
6. (Trained technician only) Replace the affected microprocessor.

**806f050c-2005ffff Memory Logging Limit Reached for [PhysicalMemoryElementName] on Subsystem [MemoryElementName]. (DIMM 5)**

**Explanation:** This message is for the use case when an implementation has detected that the Memory Logging Limit has been Reached.

May also be shown as 806f050c2005ffff or 0x806f050c2005ffff

**Severity:** Warning

**Alert Category:** Warning - Memory

**Serviceable:** Yes

**CIM Information:** **Prefix:** PLAT and **ID:** 0144

**SNMP Trap ID:** 43

**Automatically notify Support:** Yes

**User response:**

1. Check the IBM support website for an applicable retain tip or firmware update that applies to this memory error.
2. Swap the affected DIMMs (as indicated by the error LEDs on the system board or the event logs) to a different memory channel or microprocessor.
3. If the error still occurs on the same DIMM, replace the affected DIMM.
4. If the problem occurs on the same DIMM connector, check the DIMM connector. If the connector contains any foreign material or is damaged, replace the system board.
5. (Trained technician only) Remove the affected microprocessor and check the microprocessor socket pins for any damaged pins. If a damage is found, replace the system board.
6. (Trained technician only) Replace the affected microprocessor.

**806f050c-2006ffff Memory Logging Limit Reached for [PhysicalMemoryElementName] on Subsystem [MemoryElementName]. (DIMM 6)**

**Explanation:** This message is for the use case when an implementation has detected that the Memory Logging Limit has been Reached.

May also be shown as 806f050c2006ffff or 0x806f050c2006ffff

**Severity:** Warning

**Alert Category:** Warning - Memory

**Serviceable:** Yes

**CIM Information:** **Prefix:** PLAT and **ID:** 0144

**SNMP Trap ID:** 43

**Automatically notify Support:** Yes

**User response:**

1. Check the IBM support website for an applicable retain tip or firmware update that applies to this memory error.
2. Swap the affected DIMMs (as indicated by the error LEDs on the system board or the event logs) to a different memory channel or microprocessor.
3. If the error still occurs on the same DIMM, replace the affected DIMM.
4. If the problem occurs on the same DIMM connector, check the DIMM connector. If the connector contains any foreign material or is damaged, replace the system board.
5. (Trained technician only) Remove the affected microprocessor and check the microprocessor socket pins for any damaged pins. If a damage is found, replace the system board.
6. (Trained technician only) Replace the affected microprocessor.

### 806f050c-2007ffff Memory Logging Limit Reached for [PhysicalMemoryElementName] on Subsystem [MemoryElementName]. (DIMM 7)

**Explanation:** This message is for the use case when an implementation has detected that the Memory Logging Limit has been Reached.

May also be shown as 806f050c2007ffff or 0x806f050c2007ffff

**Severity:** Warning

**Alert Category:** Warning - Memory

**Serviceable:** Yes

**CIM Information:** **Prefix:** PLAT and **ID:** 0144

**SNMP Trap ID:** 43

**Automatically notify Support:** Yes

**User response:**

1. Check the IBM support website for an applicable retain tip or firmware update that applies to this memory error.
2. Swap the affected DIMMs (as indicated by the error LEDs on the system board or the event logs) to a different memory channel or microprocessor.
3. If the error still occurs on the same DIMM, replace the affected DIMM.
4. If the problem occurs on the same DIMM connector, check the DIMM connector. If the connector contains any foreign material or is damaged, replace the system board.
5. (Trained technician only) Remove the affected microprocessor and check the microprocessor socket pins for any damaged pins. If a damage is found, replace the system board.
6. (Trained technician only) Replace the affected microprocessor.

### 806f050c-2008ffff Memory Logging Limit Reached for [PhysicalMemoryElementName] on Subsystem [MemoryElementName]. (DIMM 8)

**Explanation:** This message is for the use case when an implementation has detected that the Memory Logging Limit has been Reached.

May also be shown as 806f050c2008ffff or 0x806f050c2008ffff

**Severity:** Warning

**Alert Category:** Warning - Memory

**Serviceable:** Yes

**CIM Information:** **Prefix:** PLAT and **ID:** 0144

**SNMP Trap ID:** 43

**Automatically notify Support:** Yes

**User response:**

1. Check the IBM support website for an applicable retain tip or firmware update that applies to this memory error.
2. Swap the affected DIMMs (as indicated by the error LEDs on the system board or the event logs) to a different memory channel or microprocessor.
3. If the error still occurs on the same DIMM, replace the affected DIMM.
4. If the problem occurs on the same DIMM connector, check the DIMM connector. If the connector contains any foreign material or is damaged, replace the system board.
5. (Trained technician only) Remove the affected microprocessor and check the microprocessor socket pins for any damaged pins. If a damage is found, replace the system board.
6. (Trained technician only) Replace the affected microprocessor.

**806f050c-2009ffff Memory Logging Limit Reached for [PhysicalMemoryElementName] on Subsystem [MemoryElementName]. (DIMM 9)**

**Explanation:** This message is for the use case when an implementation has detected that the Memory Logging Limit has been Reached.

May also be shown as 806f050c2009ffff or 0x806f050c2009ffff

**Severity:** Warning

**Alert Category:** Warning - Memory

**Serviceable:** Yes

**CIM Information:** **Prefix:** PLAT and **ID:** 0144

**SNMP Trap ID:** 43

**Automatically notify Support:** Yes

**User response:**

1. Check the IBM support website for an applicable retain tip or firmware update that applies to this memory error.
2. Swap the affected DIMMs (as indicated by the error LEDs on the system board or the event logs) to a different memory channel or microprocessor.
3. If the error still occurs on the same DIMM, replace the affected DIMM.
4. If the problem occurs on the same DIMM connector, check the DIMM connector. If the connector contains any foreign material or is damaged, replace the system board.
5. (Trained technician only) Remove the affected microprocessor and check the microprocessor socket pins for any damaged pins. If a damage is found, replace the system board.
6. (Trained technician only) Replace the affected microprocessor.

**806f050c-200affff Memory Logging Limit Reached for [PhysicalMemoryElementName] on Subsystem [MemoryElementName]. (DIMM 10)**

**Explanation:** This message is for the use case when an implementation has detected that the Memory Logging Limit has been Reached.

May also be shown as 806f050c200affff or 0x806f050c200affff

**Severity:** Warning

**Alert Category:** Warning - Memory

**Serviceable:** Yes

**CIM Information:** **Prefix:** PLAT and **ID:** 0144

**SNMP Trap ID:** 43

**Automatically notify Support:** Yes

**User response:**

1. Check the IBM support website for an applicable retain tip or firmware update that applies to this memory error.
2. Swap the affected DIMMs (as indicated by the error LEDs on the system board or the event logs) to a different memory channel or microprocessor.
3. If the error still occurs on the same DIMM, replace the affected DIMM.
4. If the problem occurs on the same DIMM connector, check the DIMM connector. If the connector contains any foreign material or is damaged, replace the system board.
5. (Trained technician only) Remove the affected microprocessor and check the microprocessor socket pins for any damaged pins. If a damage is found, replace the system board.
6. (Trained technician only) Replace the affected microprocessor.

**806f050c-200bffff Memory Logging Limit Reached for [PhysicalMemoryElementName] on Subsystem [MemoryElementName]. (DIMM 11)**

**Explanation:** This message is for the use case when an implementation has detected that the Memory Logging Limit has been Reached.

May also be shown as 806f050c200bffff or 0x806f050c200bffff

**Severity:** Warning

**Alert Category:** Warning - Memory

**Serviceable:** Yes

**CIM Information:** **Prefix:** PLAT and **ID:** 0144

**SNMP Trap ID:** 43

**Automatically notify Support:** Yes

**User response:**

1. Check the IBM support website for an applicable retain tip or firmware update that applies to this memory error.
2. Swap the affected DIMMs (as indicated by the error LEDs on the system board or the event logs) to a different memory channel or microprocessor.
3. If the error still occurs on the same DIMM, replace the affected DIMM.
4. If the problem occurs on the same DIMM connector, check the DIMM connector. If the connector contains any foreign material or is damaged, replace the system board.
5. (Trained technician only) Remove the affected microprocessor and check the microprocessor socket pins for any damaged pins. If a damage is found, replace the system board.
6. (Trained technician only) Replace the affected microprocessor.

---

**806f050c-200cffff Memory Logging Limit Reached for [PhysicalMemoryElementName] on Subsystem [MemoryElementName]. (DIMM 12)**

**Explanation:** This message is for the use case when an implementation has detected that the Memory Logging Limit has been Reached.

May also be shown as 806f050c200cffff or 0x806f050c200cffff

**Severity:** Warning

**Alert Category:** Warning - Memory

**Serviceable:** Yes

**CIM Information:** **Prefix:** PLAT and **ID:** 0144

**SNMP Trap ID:** 43

**Automatically notify Support:** Yes

**User response:**

1. Check the IBM support website for an applicable retain tip or firmware update that applies to this memory error.
2. Swap the affected DIMMs (as indicated by the error LEDs on the system board or the event logs) to a different memory channel or microprocessor.
3. If the error still occurs on the same DIMM, replace the affected DIMM.
4. If the problem occurs on the same DIMM connector, check the DIMM connector. If the connector contains any foreign material or is damaged, replace the system board.
5. (Trained technician only) Remove the affected microprocessor and check the microprocessor socket pins for any damaged pins. If a damage is found, replace the system board.
6. (Trained technician only) Replace the affected microprocessor.

**806f050c-200dffff Memory Logging Limit Reached for [PhysicalMemoryElementName] on Subsystem [MemoryElementName]. (DIMM 13)**

**Explanation:** This message is for the use case when an implementation has detected that the Memory Logging Limit has been Reached.

May also be shown as 806f050c200dffff or 0x806f050c200dffff

**Severity:** Warning

**Alert Category:** Warning - Memory

**Serviceable:** Yes

**CIM Information:** **Prefix:** PLAT and **ID:** 0144

**SNMP Trap ID:** 43

**Automatically notify Support:** Yes

**User response:**

1. Check the IBM support website for an applicable retain tip or firmware update that applies to this memory error.
2. Swap the affected DIMMs (as indicated by the error LEDs on the system board or the event logs) to a different memory channel or microprocessor.
3. If the error still occurs on the same DIMM, replace the affected DIMM.
4. If the problem occurs on the same DIMM connector, check the DIMM connector. If the connector contains any foreign material or is damaged, replace the system board.
5. (Trained technician only) Remove the affected microprocessor and check the microprocessor socket pins for any damaged pins. If a damage is found, replace the system board.
6. (Trained technician only) Replace the affected microprocessor.

**806f050c-200effff Memory Logging Limit Reached for [PhysicalMemoryElementName] on Subsystem [MemoryElementName]. (DIMM 14)**

**Explanation:** This message is for the use case when an implementation has detected that the Memory Logging Limit has been Reached.

May also be shown as 806f050c200effff or 0x806f050c200effff

**Severity:** Warning

**Alert Category:** Warning - Memory

**Serviceable:** Yes

**CIM Information:** **Prefix:** PLAT and **ID:** 0144

**SNMP Trap ID:** 43

**Automatically notify Support:** Yes

**User response:**

1. Check the IBM support website for an applicable retain tip or firmware update that applies to this memory error.
2. Swap the affected DIMMs (as indicated by the error LEDs on the system board or the event logs) to a different memory channel or microprocessor.
3. If the error still occurs on the same DIMM, replace the affected DIMM.
4. If the problem occurs on the same DIMM connector, check the DIMM connector. If the connector contains any foreign material or is damaged, replace the system board.
5. (Trained technician only) Remove the affected microprocessor and check the microprocessor socket pins for any damaged pins. If a damage is found, replace the system board.
6. (Trained technician only) Replace the affected microprocessor.

### 806f050c-200fffff Memory Logging Limit Reached for [PhysicalMemoryElementName] on Subsystem [MemoryElementName]. (DIMM 15)

**Explanation:** This message is for the use case when an implementation has detected that the Memory Logging Limit has been Reached.

May also be shown as 806f050c200fffff or 0x806f050c200fffff

**Severity:** Warning

**Alert Category:** Warning - Memory

**Serviceable:** Yes

**CIM Information:** **Prefix:** PLAT and **ID:** 0144

**SNMP Trap ID:** 43

**Automatically notify Support:** Yes

**User response:**

1. Check the IBM support website for an applicable retain tip or firmware update that applies to this memory error.
2. Swap the affected DIMMs (as indicated by the error LEDs on the system board or the event logs) to a different memory channel or microprocessor.
3. If the error still occurs on the same DIMM, replace the affected DIMM.
4. If the problem occurs on the same DIMM connector, check the DIMM connector. If the connector contains any foreign material or is damaged, replace the system board.
5. (Trained technician only) Remove the affected microprocessor and check the microprocessor socket pins for any damaged pins. If a damage is found, replace the system board.
6. (Trained technician only) Replace the affected microprocessor.

### 806f050c-2010ffff Memory Logging Limit Reached for [PhysicalMemoryElementName] on Subsystem [MemoryElementName]. (DIMM 16)

**Explanation:** This message is for the use case when an implementation has detected that the Memory Logging Limit has been Reached.

May also be shown as 806f050c2010ffff or 0x806f050c2010ffff

**Severity:** Warning

**Alert Category:** Warning - Memory

**Serviceable:** Yes

**CIM Information:** **Prefix:** PLAT and **ID:** 0144

**SNMP Trap ID:** 43

**Automatically notify Support:** Yes

**User response:**

1. Check the IBM support website for an applicable retain tip or firmware update that applies to this memory error.
2. Swap the affected DIMMs (as indicated by the error LEDs on the system board or the event logs) to a different memory channel or microprocessor.
3. If the error still occurs on the same DIMM, replace the affected DIMM.
4. If the problem occurs on the same DIMM connector, check the DIMM connector. If the connector contains any foreign material or is damaged, replace the system board.
5. (Trained technician only) Remove the affected microprocessor and check the microprocessor socket pins for any damaged pins. If a damage is found, replace the system board.
6. (Trained technician only) Replace the affected microprocessor.

**806f050c-2011ffff Memory Logging Limit Reached for [PhysicalMemoryElementName] on Subsystem [MemoryElementName]. (DIMM 17)**

**Explanation:** This message is for the use case when an implementation has detected that the Memory Logging Limit has been Reached.

May also be shown as 806f050c2011ffff or 0x806f050c2011ffff

**Severity:** Warning

**Alert Category:** Warning - Memory

**Serviceable:** Yes

**CIM Information:** **Prefix:** PLAT and **ID:** 0144

**SNMP Trap ID:** 43

**Automatically notify Support:** Yes

**User response:**

1. Check the IBM support website for an applicable retain tip or firmware update that applies to this memory error.
2. Swap the affected DIMMs (as indicated by the error LEDs on the system board or the event logs) to a different memory channel or microprocessor.
3. If the error still occurs on the same DIMM, replace the affected DIMM.
4. If the problem occurs on the same DIMM connector, check the DIMM connector. If the connector contains any foreign material or is damaged, replace the system board.
5. (Trained technician only) Remove the affected microprocessor and check the microprocessor socket pins for any damaged pins. If a damage is found, replace the system board.
6. (Trained technician only) Replace the affected microprocessor.

**806f050c-2012ffff Memory Logging Limit Reached for [PhysicalMemoryElementName] on Subsystem [MemoryElementName]. (DIMM 18)**

**Explanation:** This message is for the use case when an implementation has detected that the Memory Logging Limit has been Reached.

May also be shown as 806f050c2012ffff or 0x806f050c2012ffff

**Severity:** Warning

**Alert Category:** Warning - Memory

**Serviceable:** Yes

**CIM Information:** **Prefix:** PLAT and **ID:** 0144

**SNMP Trap ID:** 43

**Automatically notify Support:** Yes

**User response:**

1. Check the IBM support website for an applicable retain tip or firmware update that applies to this memory error.
2. Swap the affected DIMMs (as indicated by the error LEDs on the system board or the event logs) to a different memory channel or microprocessor.
3. If the error still occurs on the same DIMM, replace the affected DIMM.
4. If the problem occurs on the same DIMM connector, check the DIMM connector. If the connector contains any foreign material or is damaged, replace the system board.
5. (Trained technician only) Remove the affected microprocessor and check the microprocessor socket pins for any damaged pins. If a damage is found, replace the system board.
6. (Trained technician only) Replace the affected microprocessor.

**806f050c-2013ffff Memory Logging Limit Reached for [PhysicalMemoryElementName] on Subsystem [MemoryElementName]. (DIMM 19)**

**Explanation:** This message is for the use case when an implementation has detected that the Memory Logging Limit has been Reached.

May also be shown as 806f050c2013ffff or 0x806f050c2013ffff

**Severity:** Warning

**Alert Category:** Warning - Memory

**Serviceable:** Yes

**CIM Information:** **Prefix:** PLAT and **ID:** 0144

**SNMP Trap ID:** 43

**Automatically notify Support:** Yes

**User response:**

1. Check the IBM support website for an applicable retain tip or firmware update that applies to this memory error.
2. Swap the affected DIMMs (as indicated by the error LEDs on the system board or the event logs) to a different memory channel or microprocessor.
3. If the error still occurs on the same DIMM, replace the affected DIMM.
4. If the problem occurs on the same DIMM connector, check the DIMM connector. If the connector contains any foreign material or is damaged, replace the system board.
5. (Trained technician only) Remove the affected microprocessor and check the microprocessor socket pins for any damaged pins. If a damage is found, replace the system board.
6. (Trained technician only) Replace the affected microprocessor.

**806f050c-2014ffff Memory Logging Limit Reached for [PhysicalMemoryElementName] on Subsystem [MemoryElementName]. (DIMM 20)**

**Explanation:** This message is for the use case when an implementation has detected that the Memory Logging Limit has been Reached.

May also be shown as 806f050c2014ffff or 0x806f050c2014ffff

**Severity:** Warning

**Alert Category:** Warning - Memory

**Serviceable:** Yes

**CIM Information:** **Prefix:** PLAT and **ID:** 0144

**SNMP Trap ID:** 43

**Automatically notify Support:** Yes

**User response:**

1. Check the IBM support website for an applicable retain tip or firmware update that applies to this memory error.
2. Swap the affected DIMMs (as indicated by the error LEDs on the system board or the event logs) to a different memory channel or microprocessor.
3. If the error still occurs on the same DIMM, replace the affected DIMM.
4. If the problem occurs on the same DIMM connector, check the DIMM connector. If the connector contains any foreign material or is damaged, replace the system board.
5. (Trained technician only) Remove the affected microprocessor and check the microprocessor socket pins for any damaged pins. If a damage is found, replace the system board.
6. (Trained technician only) Replace the affected microprocessor.

**806f050c-2015ffff Memory Logging Limit Reached for [PhysicalMemoryElementName] on Subsystem [MemoryElementName]. (DIMM 21)**

**Explanation:** This message is for the use case when an implementation has detected that the Memory Logging Limit has been Reached.

May also be shown as 806f050c2015ffff or 0x806f050c2015ffff

**Severity:** Warning

**Alert Category:** Warning - Memory

**Serviceable:** Yes

**CIM Information:** **Prefix:** PLAT and **ID:** 0144

**SNMP Trap ID:** 43

**Automatically notify Support:** Yes

**User response:**

1. Check the IBM support website for an applicable retain tip or firmware update that applies to this memory error.
2. Swap the affected DIMMs (as indicated by the error LEDs on the system board or the event logs) to a different memory channel or microprocessor.
3. If the error still occurs on the same DIMM, replace the affected DIMM.
4. If the problem occurs on the same DIMM connector, check the DIMM connector. If the connector contains any foreign material or is damaged, replace the system board.
5. (Trained technician only) Remove the affected microprocessor and check the microprocessor socket pins for any damaged pins. If a damage is found, replace the system board.
6. (Trained technician only) Replace the affected microprocessor.

**806f050c-2016ffff Memory Logging Limit Reached for [PhysicalMemoryElementName] on Subsystem [MemoryElementName]. (DIMM 22)**

**Explanation:** This message is for the use case when an implementation has detected that the Memory Logging Limit has been Reached.

May also be shown as 806f050c2016ffff or 0x806f050c2016ffff

**Severity:** Warning

**Alert Category:** Warning - Memory

**Serviceable:** Yes

**CIM Information:** **Prefix:** PLAT and **ID:** 0144

**SNMP Trap ID:** 43

**Automatically notify Support:** Yes

**User response:**

1. Check the IBM support website for an applicable retain tip or firmware update that applies to this memory error.
2. Swap the affected DIMMs (as indicated by the error LEDs on the system board or the event logs) to a different memory channel or microprocessor.
3. If the error still occurs on the same DIMM, replace the affected DIMM.
4. If the problem occurs on the same DIMM connector, check the DIMM connector. If the connector contains any foreign material or is damaged, replace the system board.
5. (Trained technician only) Remove the affected microprocessor and check the microprocessor socket pins for any damaged pins. If a damage is found, replace the system board.
6. (Trained technician only) Replace the affected microprocessor.

### 806f050c-2017ffff Memory Logging Limit Reached for [PhysicalMemoryElementName] on Subsystem [MemoryElementName]. (DIMM 23)

**Explanation:** This message is for the use case when an implementation has detected that the Memory Logging Limit has been Reached.

May also be shown as 806f050c2017ffff or 0x806f050c2017ffff

**Severity:** Warning

**Alert Category:** Warning - Memory

**Serviceable:** Yes

**CIM Information:** **Prefix:** PLAT and **ID:** 0144

**SNMP Trap ID:** 43

**Automatically notify Support:** Yes

**User response:**

1. Check the IBM support website for an applicable retain tip or firmware update that applies to this memory error.
2. Swap the affected DIMMs (as indicated by the error LEDs on the system board or the event logs) to a different memory channel or microprocessor.
3. If the error still occurs on the same DIMM, replace the affected DIMM.
4. If the problem occurs on the same DIMM connector, check the DIMM connector. If the connector contains any foreign material or is damaged, replace the system board.
5. (Trained technician only) Remove the affected microprocessor and check the microprocessor socket pins for any damaged pins. If a damage is found, replace the system board.
6. (Trained technician only) Replace the affected microprocessor.

### 806f050c-2018ffff Memory Logging Limit Reached for [PhysicalMemoryElementName] on Subsystem [MemoryElementName]. (DIMM 24)

**Explanation:** This message is for the use case when an implementation has detected that the Memory Logging Limit has been Reached.

May also be shown as 806f050c2018ffff or 0x806f050c2018ffff

**Severity:** Warning

**Alert Category:** Warning - Memory

**Serviceable:** Yes

**CIM Information:** **Prefix:** PLAT and **ID:** 0144

**SNMP Trap ID:** 43

**Automatically notify Support:** Yes

**User response:**

1. Check the IBM support website for an applicable retain tip or firmware update that applies to this memory error.
2. Swap the affected DIMMs (as indicated by the error LEDs on the system board or the event logs) to a different memory channel or microprocessor.
3. If the error still occurs on the same DIMM, replace the affected DIMM.
4. If the problem occurs on the same DIMM connector, check the DIMM connector. If the connector contains any foreign material or is damaged, replace the system board.
5. (Trained technician only) Remove the affected microprocessor and check the microprocessor socket pins for any damaged pins. If a damage is found, replace the system board.
6. (Trained technician only) Replace the affected microprocessor.

**806f050c-2581ffff Memory Logging Limit Reached for [PhysicalMemoryElementName] on Subsystem [MemoryElementName]. (All DIMMS)**

**Explanation:** This message is for the use case when an implementation has detected that the Memory Logging Limit has been Reached.

May also be shown as 806f050c2581ffff or 0x806f050c2581ffff

**Severity:** Warning

**Alert Category:** Warning - Memory

**Serviceable:** Yes

**CIM Information:** **Prefix:** PLAT and **ID:** 0144

**SNMP Trap ID:** 43

**Automatically notify Support:** Yes

**User response:**

1. Check the IBM support website for an applicable retain tip or firmware update that applies to this memory error.
2. Swap the affected DIMMs (as indicated by the error LEDs on the system board or the event logs) to a different memory channel or microprocessor.
3. If the error still occurs on the same DIMM, replace the affected DIMM.
4. If the problem occurs on the same DIMM connector, check the DIMM connector. If the connector contains any foreign material or is damaged, replace the system board.
5. (Trained technician only) Remove the affected microprocessor and check the microprocessor socket pins for any damaged pins. If a damage is found, replace the system board.
6. (Trained technician only) Replace the affected microprocessor.

---

**806f050d-0400ffff Array [ComputerSystemElementName] is in critical condition. (Drive 0)**

**Explanation:** This message is for the use case when an implementation has detected that an Array is Critical.

May also be shown as 806f050d0400ffff or 0x806f050d0400ffff

**Severity:** Error

**Alert Category:** Critical - Hard Disk drive

**Serviceable:** Yes

**CIM Information:** **Prefix:** PLAT and **ID:** 0174

**SNMP Trap ID:** 5

**Automatically notify Support:** No

**User response:**

1. Make sure that the RAID adapter firmware and hard disk drive firmware are at the latest level.
2. Make sure that the SAS cable is connected correctly.
3. Replace the SAS cable.
4. Check backplane cable connection.
5. Replace the RAID adapter.
6. Replace the hard disk drive that is indicated by a lit status LED.

**806f050d-0401ffff Array [ComputerSystemElementName] is in critical condition. (Drive 1)**

**Explanation:** This message is for the use case when an implementation has detected that an Array is Critical.

May also be shown as 806f050d0401ffff or 0x806f050d0401ffff

**Severity:** Error

**Alert Category:** Critical - Hard Disk drive

**Serviceable:** Yes

**CIM Information:** **Prefix:** PLAT and **ID:** 0174

**SNMP Trap ID:** 5

**Automatically notify Support:** No

**User response:**

1. Make sure that the RAID adapter firmware and hard disk drive firmware are at the latest level.
2. Make sure that the SAS cable is connected correctly.
3. Replace the SAS cable.
4. Check backplane cable connection.
5. Replace the RAID adapter.
6. Replace the hard disk drive that is indicated by a lit status LED.

**806f050d-0402ffff Array [ComputerSystemElementName] is in critical condition. (Drive 2)**

**Explanation:** This message is for the use case when an implementation has detected that an Array is Critical.

May also be shown as 806f050d0402ffff or 0x806f050d0402ffff

**Severity:** Error

**Alert Category:** Critical - Hard Disk drive

**Serviceable:** Yes

**CIM Information:** **Prefix:** PLAT and **ID:** 0174

**SNMP Trap ID:** 5

**Automatically notify Support:** No

**User response:**

1. Make sure that the RAID adapter firmware and hard disk drive firmware are at the latest level.
2. Make sure that the SAS cable is connected correctly.
3. Replace the SAS cable.
4. Check backplane cable connection.
5. Replace the RAID adapter.
6. Replace the hard disk drive that is indicated by a lit status LED.

**806f050d-0403ffff Array [ComputerSystemElementName] is in critical condition. (Drive 3)**

**Explanation:** This message is for the use case when an implementation has detected that an Array is Critical.

May also be shown as 806f050d0403ffff or 0x806f050d0403ffff

**Severity:** Error

**Alert Category:** Critical - Hard Disk drive

**Serviceable:** Yes

**CIM Information:** **Prefix:** PLAT and **ID:** 0174

**SNMP Trap ID:** 5

**Automatically notify Support:** No

**User response:**

1. Make sure that the RAID adapter firmware and hard disk drive firmware are at the latest level.
2. Make sure that the SAS cable is connected correctly.
3. Replace the SAS cable.
4. Check backplane cable connection.
5. Replace the RAID adapter.
6. Replace the hard disk drive that is indicated by a lit status LED.

---

**806f050d-0404ffff Array [ComputerSystemElementName] is in critical condition. (Drive 4)**

**Explanation:** This message is for the use case when an implementation has detected that an Array is Critical.

May also be shown as 806f050d0404ffff or 0x806f050d0404ffff

**Severity:** Error

**Alert Category:** Critical - Hard Disk drive

**Serviceable:** Yes

**CIM Information:** **Prefix:** PLAT and **ID:** 0174

**SNMP Trap ID:** 5

**Automatically notify Support:** No

**User response:**

1. Make sure that the RAID adapter firmware and hard disk drive firmware are at the latest level.
2. Make sure that the SAS cable is connected correctly.
3. Replace the SAS cable.
4. Check backplane cable connection.
5. Replace the RAID adapter.
6. Replace the hard disk drive that is indicated by a lit status LED.

**806f050d-0405ffff Array [ComputerSystemElementName] is in critical condition. (Drive 5)**

**Explanation:** This message is for the use case when an implementation has detected that an Array is Critical.

May also be shown as 806f050d0405ffff or 0x806f050d0405ffff

**Severity:** Error

**Alert Category:** Critical - Hard Disk drive

**Serviceable:** Yes

**CIM Information:** **Prefix:** PLAT and **ID:** 0174

**SNMP Trap ID:** 5

**Automatically notify Support:** No

**User response:**

1. Make sure that the RAID adapter firmware and hard disk drive firmware are at the latest level.
2. Make sure that the SAS cable is connected correctly.
3. Replace the SAS cable.
4. Check backplane cable connection.
5. Replace the RAID adapter.
6. Replace the hard disk drive that is indicated by a lit status LED.

**806f050d-0406ffff Array [ComputerSystemElementName] is in critical condition. (Drive 6)**

**Explanation:** This message is for the use case when an implementation has detected that an Array is Critical.

May also be shown as 806f050d0406ffff or 0x806f050d0406ffff

**Severity:** Error

**Alert Category:** Critical - Hard Disk drive

**Serviceable:** Yes

**CIM Information:** **Prefix:** PLAT and **ID:** 0174

**SNMP Trap ID:** 5

**Automatically notify Support:** No

**User response:**

1. Make sure that the RAID adapter firmware and hard disk drive firmware are at the latest level.
2. Make sure that the SAS cable is connected correctly.
3. Replace the SAS cable.
4. Check backplane cable connection.
5. Replace the RAID adapter.
6. Replace the hard disk drive that is indicated by a lit status LED.

**806f050d-0407ffff Array [ComputerSystemElementName] is in critical condition. (Drive 7)**

**Explanation:** This message is for the use case when an implementation has detected that an Array is Critical.

May also be shown as 806f050d0407ffff or 0x806f050d0407ffff

**Severity:** Error

**Alert Category:** Critical - Hard Disk drive

**Serviceable:** Yes

**CIM Information:** **Prefix:** PLAT and **ID:** 0174

**SNMP Trap ID:** 5

**Automatically notify Support:** No

**User response:**

1. Make sure that the RAID adapter firmware and hard disk drive firmware are at the latest level.
2. Make sure that the SAS cable is connected correctly.
3. Replace the SAS cable.
4. Check backplane cable connection.
5. Replace the RAID adapter.
6. Replace the hard disk drive that is indicated by a lit status LED.

---

**806f050d-0408ffff Array [ComputerSystemElementName] is in critical condition. (Drive 8)**

**Explanation:** This message is for the use case when an implementation has detected that an Array is Critical.

May also be shown as 806f050d0408ffff or 0x806f050d0408ffff

**Severity:** Error

**Alert Category:** Critical - Hard Disk drive

**Serviceable:** Yes

**CIM Information:** **Prefix:** PLAT and **ID:** 0174

**SNMP Trap ID:** 5

**Automatically notify Support:** No

**User response:**

1. Make sure that the RAID adapter firmware and hard disk drive firmware are at the latest level.
2. Make sure that the SAS cable is connected correctly.
3. Replace the SAS cable.
4. Check backplane cable connection.
5. Replace the RAID adapter.
6. Replace the hard disk drive that is indicated by a lit status LED.

**806f050d-0409ffff Array [ComputerSystemElementName] is in critical condition. (Drive 9)**

**Explanation:** This message is for the use case when an implementation has detected that an Array is Critical.

May also be shown as 806f050d0409ffff or 0x806f050d0409ffff

**Severity:** Error

**Alert Category:** Critical - Hard Disk drive

**Serviceable:** Yes

**CIM Information:** **Prefix:** PLAT and **ID:** 0174

**SNMP Trap ID:** 5

**Automatically notify Support:** No

**User response:**

1. Make sure that the RAID adapter firmware and hard disk drive firmware are at the latest level.
2. Make sure that the SAS cable is connected correctly.
3. Replace the SAS cable.
4. Check backplane cable connection.
5. Replace the RAID adapter.
6. Replace the hard disk drive that is indicated by a lit status LED.

**806f050d-040affff Array [ComputerSystemElementName] is in critical condition. (Drive 10)**

**Explanation:** This message is for the use case when an implementation has detected that an Array is Critical.

May also be shown as 806f050d040affff or 0x806f050d040affff

**Severity:** Error

**Alert Category:** Critical - Hard Disk drive

**Serviceable:** Yes

**CIM Information:** **Prefix:** PLAT and **ID:** 0174

**SNMP Trap ID:** 5

**Automatically notify Support:** No

**User response:**

1. Make sure that the RAID adapter firmware and hard disk drive firmware are at the latest level.
2. Make sure that the SAS cable is connected correctly.
3. Replace the SAS cable.
4. Check backplane cable connection.
5. Replace the RAID adapter.
6. Replace the hard disk drive that is indicated by a lit status LED.

**806f050d-040bffff Array [ComputerSystemElementName] is in critical condition. (Drive 11)**

**Explanation:** This message is for the use case when an implementation has detected that an Array is Critical.

May also be shown as 806f050d040bffff or 0x806f050d040bffff

**Severity:** Error

**Alert Category:** Critical - Hard Disk drive

**Serviceable:** Yes

**CIM Information:** **Prefix:** PLAT and **ID:** 0174

**SNMP Trap ID:** 5

**Automatically notify Support:** No

**User response:**

1. Make sure that the RAID adapter firmware and hard disk drive firmware are at the latest level.
2. Make sure that the SAS cable is connected correctly.
3. Replace the SAS cable.
4. Check backplane cable connection.
5. Replace the RAID adapter.
6. Replace the hard disk drive that is indicated by a lit status LED.

---

**806f050d-040cffff Array [ComputerSystemElementName] is in critical condition. (Drive 12)**

**Explanation:** This message is for the use case when an implementation has detected that an Array is Critical.

May also be shown as 806f050d040cffff or 0x806f050d040cffff

**Severity:** Error

**Alert Category:** Critical - Hard Disk drive

**Serviceable:** Yes

**CIM Information:** **Prefix:** PLAT and **ID:** 0174

**SNMP Trap ID:** 5

**Automatically notify Support:** No

**User response:**

1. Make sure that the RAID adapter firmware and hard disk drive firmware are at the latest level.
2. Make sure that the SAS cable is connected correctly.
3. Replace the SAS cable.
4. Check backplane cable connection.
5. Replace the RAID adapter.
6. Replace the hard disk drive that is indicated by a lit status LED.

**806f050d-040dffff Array [ComputerSystemElementName] is in critical condition. (Drive 13)**

**Explanation:** This message is for the use case when an implementation has detected that an Array is Critical.

May also be shown as 806f050d040dffff or 0x806f050d040dffff

**Severity:** Error

**Alert Category:** Critical - Hard Disk drive

**Serviceable:** Yes

**CIM Information:** **Prefix:** PLAT and **ID:** 0174

**SNMP Trap ID:** 5

**Automatically notify Support:** No

**User response:**

1. Make sure that the RAID adapter firmware and hard disk drive firmware are at the latest level.
2. Make sure that the SAS cable is connected correctly.
3. Replace the SAS cable.
4. Check backplane cable connection.
5. Replace the RAID adapter.
6. Replace the hard disk drive that is indicated by a lit status LED.

---

**806f050d-040effff Array [ComputerSystemElementName] is in critical condition. (Drive 14)**

**Explanation:** This message is for the use case when an implementation has detected that an Array is Critical.

May also be shown as 806f050d040effff or 0x806f050d040effff

**Severity:** Error

**Alert Category:** Critical - Hard Disk drive

**Serviceable:** Yes

**CIM Information:** **Prefix:** PLAT and **ID:** 0174

**SNMP Trap ID:** 5

**Automatically notify Support:** No

**User response:**

1. Make sure that the RAID adapter firmware and hard disk drive firmware are at the latest level.
2. Make sure that the SAS cable is connected correctly.
3. Replace the SAS cable.
4. Check backplane cable connection.
5. Replace the RAID adapter.
6. Replace the hard disk drive that is indicated by a lit status LED.

**806f050d-040fffff Array [ComputerSystemElementName] is in critical condition. (Drive 15)**

**Explanation:** This message is for the use case when an implementation has detected that an Array is Critical.

May also be shown as 806f050d040fffff or 0x806f050d040fffff

**Severity:** Error

**Alert Category:** Critical - Hard Disk drive

**Serviceable:** Yes

**CIM Information:** **Prefix:** PLAT and **ID:** 0174

**SNMP Trap ID:** 5

**Automatically notify Support:** No

**User response:**

1. Make sure that the RAID adapter firmware and hard disk drive firmware are at the latest level.
2. Make sure that the SAS cable is connected correctly.
3. Replace the SAS cable.
4. Check backplane cable connection.
5. Replace the RAID adapter.
6. Replace the hard disk drive that is indicated by a lit status LED.

---

**806f050d-0410ffff Array [ComputerSystemElementName] is in critical condition. (Drive 16)**

**Explanation:** This message is for the use case when an implementation has detected that an Array is Critical.

May also be shown as 806f050d0410ffff or 0x806f050d0410ffff

**Severity:** Error

**Alert Category:** Critical - Hard Disk drive

**Serviceable:** Yes

**CIM Information:** **Prefix:** PLAT and **ID:** 0174

**SNMP Trap ID:** 5

**Automatically notify Support:** No

**User response:**

1. Make sure that the RAID adapter firmware and hard disk drive firmware are at the latest level.
2. Make sure that the SAS cable is connected correctly.
3. Replace the SAS cable.
4. Check backplane cable connection.
5. Replace the RAID adapter.
6. Replace the hard disk drive that is indicated by a lit status LED.

**806f050d-0411ffff Array [ComputerSystemElementName] is in critical condition. (Drive 17)**

**Explanation:** This message is for the use case when an implementation has detected that an Array is Critical.

May also be shown as 806f050d0411ffff or 0x806f050d0411ffff

**Severity:** Error

**Alert Category:** Critical - Hard Disk drive

**Serviceable:** Yes

**CIM Information:** **Prefix:** PLAT and **ID:** 0174

**SNMP Trap ID:** 5

**Automatically notify Support:** No

**User response:**

1. Make sure that the RAID adapter firmware and hard disk drive firmware are at the latest level.
2. Make sure that the SAS cable is connected correctly.
3. Replace the SAS cable.
4. Check backplane cable connection.
5. Replace the RAID adapter.
6. Replace the hard disk drive that is indicated by a lit status LED.

**806f050d-0412ffff Array [ComputerSystemElementName] is in critical condition. (Drive 18)**

**Explanation:** This message is for the use case when an implementation has detected that an Array is Critical.

May also be shown as 806f050d0412ffff or 0x806f050d0412ffff

**Severity:** Error

**Alert Category:** Critical - Hard Disk drive

**Serviceable:** Yes

**CIM Information:** **Prefix:** PLAT and **ID:** 0174

**SNMP Trap ID:** 5

**Automatically notify Support:** No

**User response:**

1. Make sure that the RAID adapter firmware and hard disk drive firmware are at the latest level.
2. Make sure that the SAS cable is connected correctly.
3. Replace the SAS cable.
4. Check backplane cable connection.
5. Replace the RAID adapter.
6. Replace the hard disk drive that is indicated by a lit status LED.

**806f050d-0413ffff Array [ComputerSystemElementName] is in critical condition. (Drive 19)**

**Explanation:** This message is for the use case when an implementation has detected that an Array is Critical.

May also be shown as 806f050d0413ffff or 0x806f050d0413ffff

**Severity:** Error

**Alert Category:** Critical - Hard Disk drive

**Serviceable:** Yes

**CIM Information:** **Prefix:** PLAT and **ID:** 0174

**SNMP Trap ID:** 5

**Automatically notify Support:** No

**User response:**

1. Make sure that the RAID adapter firmware and hard disk drive firmware are at the latest level.
2. Make sure that the SAS cable is connected correctly.
3. Replace the SAS cable.
4. Check backplane cable connection.
5. Replace the RAID adapter.
6. Replace the hard disk drive that is indicated by a lit status LED.

---

**806f050d-0414ffff Array [ComputerSystemElementName] is in critical condition. (Drive 20)**

**Explanation:** This message is for the use case when an implementation has detected that an Array is Critical.

May also be shown as 806f050d0414ffff or 0x806f050d0414ffff

**Severity:** Error

**Alert Category:** Critical - Hard Disk drive

**Serviceable:** Yes

**CIM Information:** **Prefix:** PLAT and **ID:** 0174

**SNMP Trap ID:** 5

**Automatically notify Support:** No

**User response:**

1. Make sure that the RAID adapter firmware and hard disk drive firmware are at the latest level.
2. Make sure that the SAS cable is connected correctly.
3. Replace the SAS cable.
4. Check backplane cable connection.
5. Replace the RAID adapter.
6. Replace the hard disk drive that is indicated by a lit status LED.

**806f050d-0415ffff Array [ComputerSystemElementName] is in critical condition. (Drive 21)**

**Explanation:** This message is for the use case when an implementation has detected that an Array is Critical.

May also be shown as 806f050d0415ffff or 0x806f050d0415ffff

**Severity:** Error

**Alert Category:** Critical - Hard Disk drive

**Serviceable:** Yes

**CIM Information:** **Prefix:** PLAT and **ID:** 0174

**SNMP Trap ID:** 5

**Automatically notify Support:** No

**User response:**

1. Make sure that the RAID adapter firmware and hard disk drive firmware are at the latest level.
2. Make sure that the SAS cable is connected correctly.
3. Replace the SAS cable.
4. Check backplane cable connection.
5. Replace the RAID adapter.
6. Replace the hard disk drive that is indicated by a lit status LED.

**806f050d-0416ffff Array [ComputerSystemElementName] is in critical condition. (Drive 22)**

**Explanation:** This message is for the use case when an implementation has detected that an Array is Critical.

May also be shown as 806f050d0416ffff or 0x806f050d0416ffff

**Severity:** Error

**Alert Category:** Critical - Hard Disk drive

**Serviceable:** Yes

**CIM Information:** **Prefix:** PLAT and **ID:** 0174

**SNMP Trap ID:** 5

**Automatically notify Support:** No

**User response:**

1. Make sure that the RAID adapter firmware and hard disk drive firmware are at the latest level.
2. Make sure that the SAS cable is connected correctly.
3. Replace the SAS cable.
4. Check backplane cable connection.
5. Replace the RAID adapter.
6. Replace the hard disk drive that is indicated by a lit status LED.

**806f050d-0417ffff Array [ComputerSystemElementName] is in critical condition. (Drive 23)**

**Explanation:** This message is for the use case when an implementation has detected that an Array is Critical.

May also be shown as 806f050d0417ffff or 0x806f050d0417ffff

**Severity:** Error

**Alert Category:** Critical - Hard Disk drive

**Serviceable:** Yes

**CIM Information:** **Prefix:** PLAT and **ID:** 0174

**SNMP Trap ID:** 5

**Automatically notify Support:** No

**User response:**

1. Make sure that the RAID adapter firmware and hard disk drive firmware are at the latest level.
2. Make sure that the SAS cable is connected correctly.
3. Replace the SAS cable.
4. Check backplane cable connection.
5. Replace the RAID adapter.
6. Replace the hard disk drive that is indicated by a lit status LED.

---

**806f050d-0418ffff Array [ComputerSystemElementName] is in critical condition. (Drive 24)**

**Explanation:** This message is for the use case when an implementation has detected that an Array is Critical.

May also be shown as 806f050d0418ffff or 0x806f050d0418ffff

**Severity:** Error

**Alert Category:** Critical - Hard Disk drive

**Serviceable:** Yes

**CIM Information:** **Prefix:** PLAT and **ID:** 0174

**SNMP Trap ID:** 5

**Automatically notify Support:** No

**User response:**

1. Make sure that the RAID adapter firmware and hard disk drive firmware are at the latest level.
2. Make sure that the SAS cable is connected correctly.
3. Replace the SAS cable.
4. Check backplane cable connection.
5. Replace the RAID adapter.
6. Replace the hard disk drive that is indicated by a lit status LED.

**806f050d-0419ffff Array [ComputerSystemElementName] is in critical condition. (Drive 25)**

**Explanation:** This message is for the use case when an implementation has detected that an Array is Critical.

May also be shown as 806f050d0419ffff or 0x806f050d0419ffff

**Severity:** Error

**Alert Category:** Critical - Hard Disk drive

**Serviceable:** Yes

**CIM Information:** **Prefix:** PLAT and **ID:** 0174

**SNMP Trap ID:** 5

**Automatically notify Support:** No

**User response:**

1. Make sure that the RAID adapter firmware and hard disk drive firmware are at the latest level.
2. Make sure that the SAS cable is connected correctly.
3. Replace the SAS cable.
4. Check backplane cable connection.
5. Replace the RAID adapter.
6. Replace the hard disk drive that is indicated by a lit status LED.

**806f050d-041affff Array [ComputerSystemElementName] is in critical condition. (Drive 26)**

**Explanation:** This message is for the use case when an implementation has detected that an Array is Critical.

May also be shown as 806f050d041affff or 0x806f050d041affff

**Severity:** Error

**Alert Category:** Critical - Hard Disk drive

**Serviceable:** Yes

**CIM Information:** **Prefix:** PLAT and **ID:** 0174

**SNMP Trap ID:** 5

**Automatically notify Support:** No

**User response:**

1. Make sure that the RAID adapter firmware and hard disk drive firmware are at the latest level.
2. Make sure that the SAS cable is connected correctly.
3. Replace the SAS cable.
4. Check backplane cable connection.
5. Replace the RAID adapter.
6. Replace the hard disk drive that is indicated by a lit status LED.

**806f050d-041bffff Array [ComputerSystemElementName] is in critical condition. (Drive 27)**

**Explanation:** This message is for the use case when an implementation has detected that an Array is Critical.

May also be shown as 806f050d041bffff or 0x806f050d041bffff

**Severity:** Error

**Alert Category:** Critical - Hard Disk drive

**Serviceable:** Yes

**CIM Information:** **Prefix:** PLAT and **ID:** 0174

**SNMP Trap ID:** 5

**Automatically notify Support:** No

**User response:**

1. Make sure that the RAID adapter firmware and hard disk drive firmware are at the latest level.
2. Make sure that the SAS cable is connected correctly.
3. Replace the SAS cable.
4. Check backplane cable connection.
5. Replace the RAID adapter.
6. Replace the hard disk drive that is indicated by a lit status LED.

---

**806f050d-041cffff Array [ComputerSystemElementName] is in critical condition. (Drive 28)**

**Explanation:** This message is for the use case when an implementation has detected that an Array is Critical.

May also be shown as 806f050d041cffff or 0x806f050d041cffff

**Severity:** Error

**Alert Category:** Critical - Hard Disk drive

**Serviceable:** Yes

**CIM Information:** **Prefix:** PLAT and **ID:** 0174

**SNMP Trap ID:** 5

**Automatically notify Support:** No

**User response:**

1. Make sure that the RAID adapter firmware and hard disk drive firmware are at the latest level.
2. Make sure that the SAS cable is connected correctly.
3. Replace the SAS cable.
4. Check backplane cable connection.
5. Replace the RAID adapter.
6. Replace the hard disk drive that is indicated by a lit status LED.

**806f050d-041dffff Array [ComputerSystemElementName] is in critical condition. (Drive 29)**

**Explanation:** This message is for the use case when an implementation has detected that an Array is Critical.

May also be shown as 806f050d041dffff or 0x806f050d041dffff

**Severity:** Error

**Alert Category:** Critical - Hard Disk drive

**Serviceable:** Yes

**CIM Information:** **Prefix:** PLAT and **ID:** 0174

**SNMP Trap ID:** 5

**Automatically notify Support:** No

**User response:**

1. Make sure that the RAID adapter firmware and hard disk drive firmware are at the latest level.
2. Make sure that the SAS cable is connected correctly.
3. Replace the SAS cable.
4. Check backplane cable connection.
5. Replace the RAID adapter.
6. Replace the hard disk drive that is indicated by a lit status LED.

---

**806f050d-041effff Array [ComputerSystemElementName] is in critical condition. (Drive 30)**

**Explanation:** This message is for the use case when an implementation has detected that an Array is Critical.

May also be shown as 806f050d041effff or 0x806f050d041effff

**Severity:** Error

**Alert Category:** Critical - Hard Disk drive

**Serviceable:** Yes

**CIM Information:** **Prefix:** PLAT and **ID:** 0174

**SNMP Trap ID:** 5

**Automatically notify Support:** No

**User response:**

1. Make sure that the RAID adapter firmware and hard disk drive firmware are at the latest level.
2. Make sure that the SAS cable is connected correctly.
3. Replace the SAS cable.
4. Check backplane cable connection.
5. Replace the RAID adapter.
6. Replace the hard disk drive that is indicated by a lit status LED.

**806f050d-041fffff Array [ComputerSystemElementName] is in critical condition. (Drive 31)**

**Explanation:** This message is for the use case when an implementation has detected that an Array is Critical.

May also be shown as 806f050d041fffff or 0x806f050d041fffff

**Severity:** Error

**Alert Category:** Critical - Hard Disk drive

**Serviceable:** Yes

**CIM Information:** **Prefix:** PLAT and **ID:** 0174

**SNMP Trap ID:** 5

**Automatically notify Support:** No

**User response:**

1. Make sure that the RAID adapter firmware and hard disk drive firmware are at the latest level.
2. Make sure that the SAS cable is connected correctly.
3. Replace the SAS cable.
4. Check backplane cable connection.
5. Replace the RAID adapter.
6. Replace the hard disk drive that is indicated by a lit status LED.

---

**806f0513-2582ffff A PCI SERR has occurred on system [ComputerSystemElementName]. (PCIs)**

**Explanation:** This message is for the use case when an implementation has detected a PCI SERR.

May also be shown as 806f05132582ffff or 0x806f05132582ffff

**Severity:** Error

**Alert Category:** Critical - Other

**Serviceable:** Yes

**CIM Information:** **Prefix:** PLAT and **ID:** 0234

**SNMP Trap ID:** 50

**Automatically notify Support:** No

**User response:**

1. Check the PCI LED.
2. Reseat the affected adapters and riser card.
3. Update the server firmware (UEFI and IMM) and adapter firmware. Important: Some cluster solutions require specific code levels or coordinated code updates. If the device is part of a cluster solution, verify that the latest level of code is supported for the cluster solution before you update the code.
4. Make sure that the adapter is supported. For a list of supported optional devices, see http://www.ibm.com/systems/info/x86servers/serverproven/compat/us/.
5. Remove both adapters.
6. Replace the PCIe adapters.
7. Replace the riser card.

**806f052b-2101ffff Invalid or Unsupported firmware or software was detected on system [ComputerSystemElementName]. (IMM2 FW Failover)**

**Explanation:** This message is for the use case when an implementation has detected an Invalid/Unsupported Firmware/Software Version.

May also be shown as 806f052b2101ffff or 0x806f052b2101ffff

**Severity:** Error

**Alert Category:** Critical - Other

**Serviceable:** Yes

**CIM Information:** **Prefix:** PLAT and **ID:** 0446

**SNMP Trap ID:** 50

**Automatically notify Support:** No

**User response:**

1. Make sure the server meets the minimum configuration to start (see Power-supply LEDs).
2. Recover the server firmware from the backup page by restarting the server.
3. Update the server firmware to the latest level (see Updating the firmware). Important: Some cluster solutions require specific code levels or coordinated code updates. If the device is part of a cluster solution, verify that the latest level of code is supported for the cluster solution before you update the code.
4. Remove components one at a time, restarting the server each time, to see if the problem goes away.
5. If the problem remains, (trained service technician) replace the system board.

**806f0607-0301ffff An SM BIOS Uncorrectable CPU complex error for [ProcessorElementName] has asserted. (CPU 1)**

**Explanation:** This message is for the use case when an SM BIOS Uncorrectable CPU complex error has asserted.

May also be shown as 806f06070301ffff or 0x806f06070301ffff

**Severity:** Error

**Alert Category:** Critical - CPU

**Serviceable:** Yes

**CIM Information:** **Prefix:** PLAT and **ID:** 0816

**SNMP Trap ID:** 40

**Automatically notify Support:** No

**User response:**

1. Make sure that the installed microprocessors are compatible with each other (see Installing a microprocessor and heat sink for information about microprocessor requirements).
2. Update the server firmware to the latest level (see Updating the firmware).
3. (Trained technician only) Replace the incompatible microprocessor.

**806f0607-0302ffff An SM BIOS Uncorrectable CPU complex error for [ProcessorElementName] has asserted. (CPU 2)**

**Explanation:** This message is for the use case when an SM BIOS Uncorrectable CPU complex error has asserted.

May also be shown as 806f06070302ffff or 0x806f06070302ffff

**Severity:** Error

**Alert Category:** Critical - CPU

**Serviceable:** Yes

**CIM Information:** **Prefix:** PLAT and **ID:** 0816

**SNMP Trap ID:** 40

**Automatically notify Support:** No

**User response:**

1. Make sure that the installed microprocessors are compatible with each other (see Installing a microprocessor and heat sink for information about microprocessor requirements).
2. Update the server firmware to the latest level (see Updating the firmware).
3. (Trained technician only) Replace the incompatible microprocessor.

**806f0607-2584ffff An SM BIOS Uncorrectable CPU complex error for [ProcessorElementName] has asserted. (All CPUs)**

**Explanation:** This message is for the use case when an SM BIOS Uncorrectable CPU complex error has asserted.

May also be shown as 806f06072584ffff or 0x806f06072584ffff

**Severity:** Error

**Alert Category:** Critical - CPU

**Serviceable:** Yes

**CIM Information:** **Prefix:** PLAT and **ID:** 0816

**SNMP Trap ID:** 40

**Automatically notify Support:** No

**User response:**

1. Make sure that the installed microprocessors are compatible with each other (see Installing a microprocessor and heat sink for information about microprocessor requirements).
2. Update the server firmware to the latest level (see Updating the firmware).
3. (Trained technician only) Replace the incompatible microprocessor. One of the CPUs :

**806f0608-1301ffff [PowerSupplyElementName] has a Configuration Mismatch. (PS Configuration)**

**Explanation:** This message is for the use case when an implementation has detected a Power Supply with a Configuration Error.

May also be shown as 806f06081301ffff or 0x806f06081301ffff

**Severity:** Error

**Alert Category:** Critical - Power

**Serviceable:** Yes

**CIM Information:** **Prefix:** PLAT and **ID:** 0104

**SNMP Trap ID:** 4

**Automatically notify Support:** No

**User response:**

1. Make sure that the power supplies installed are with the same rating or wattage.
2. Reinstall the power supplies with the same rating or wattage.

**806f060d-0400ffff Array [ComputerSystemElementName] has failed. (Drive 0)**

**Explanation:** This message is for the use case when an implementation has detected that an Array Failed.

May also be shown as 806f060d0400ffff or 0x806f060d0400ffff

**Severity:** Error

**Alert Category:** Critical - Hard Disk drive

**Serviceable:** Yes

**CIM Information:** **Prefix:** PLAT and **ID:** 0176

**SNMP Trap ID:** 5

**Automatically notify Support:** Yes

**User response:**

1. Make sure that the RAID adapter firmware and hard disk drive firmware are at the latest level.
2. Make sure that the SAS cable is connected correctly.
3. Replace the SAS cable.
4. Replace the RAID adapter.
5. Replace the hard disk drive that is indicated by a lit status LED.

**806f060d-0401ffff Array [ComputerSystemElementName] has failed. (Drive 1)**

**Explanation:** This message is for the use case when an implementation has detected that an Array Failed.

May also be shown as 806f060d0401ffff or 0x806f060d0401ffff

**Severity:** Error

**Alert Category:** Critical - Hard Disk drive

**Serviceable:** Yes

**CIM Information:** **Prefix:** PLAT and **ID:** 0176

**SNMP Trap ID:** 5

**Automatically notify Support:** Yes

**User response:**

1. Make sure that the RAID adapter firmware and hard disk drive firmware are at the latest level.
2. Make sure that the SAS cable is connected correctly.
3. Replace the SAS cable.
4. Replace the RAID adapter.
5. Replace the hard disk drive that is indicated by a lit status LED.

---

**806f060d-0402ffff Array [ComputerSystemElementName] has failed. (Drive 2)**

**Explanation:** This message is for the use case when an implementation has detected that an Array Failed.

May also be shown as 806f060d0402ffff or 0x806f060d0402ffff

**Severity:** Error

**Alert Category:** Critical - Hard Disk drive

**Serviceable:** Yes

**CIM Information:** **Prefix:** PLAT and **ID:** 0176

**SNMP Trap ID:** 5

**Automatically notify Support:** Yes

**User response:**

1. Make sure that the RAID adapter firmware and hard disk drive firmware are at the latest level.
2. Make sure that the SAS cable is connected correctly.
3. Replace the SAS cable.
4. Replace the RAID adapter.
5. Replace the hard disk drive that is indicated by a lit status LED.

**806f060d-0403ffff Array [ComputerSystemElementName] has failed. (Drive 3)**

**Explanation:** This message is for the use case when an implementation has detected that an Array Failed.

May also be shown as 806f060d0403ffff or 0x806f060d0403ffff

**Severity:** Error

**Alert Category:** Critical - Hard Disk drive

**Serviceable:** Yes

**CIM Information:** **Prefix:** PLAT and **ID:** 0176

**SNMP Trap ID:** 5

**Automatically notify Support:** Yes

**User response:**

1. Make sure that the RAID adapter firmware and hard disk drive firmware are at the latest level.
2. Make sure that the SAS cable is connected correctly.
3. Replace the SAS cable.
4. Replace the RAID adapter.
5. Replace the hard disk drive that is indicated by a lit status LED.

**806f060d-0404ffff Array [ComputerSystemElementName] has failed. (Drive 4)**

**Explanation:** This message is for the use case when an implementation has detected that an Array Failed.

May also be shown as 806f060d0404ffff or 0x806f060d0404ffff

**Severity:** Error

**Alert Category:** Critical - Hard Disk drive

**Serviceable:** Yes

**CIM Information:** **Prefix:** PLAT and **ID:** 0176

**SNMP Trap ID:** 5

**Automatically notify Support:** Yes

**User response:**

1. Make sure that the RAID adapter firmware and hard disk drive firmware are at the latest level.
2. Make sure that the SAS cable is connected correctly.
3. Replace the SAS cable.
4. Replace the RAID adapter.
5. Replace the hard disk drive that is indicated by a lit status LED.

**806f060d-0405ffff Array [ComputerSystemElementName] has failed. (Drive 5)**

**Explanation:** This message is for the use case when an implementation has detected that an Array Failed.

May also be shown as 806f060d0405ffff or 0x806f060d0405ffff

**Severity:** Error

**Alert Category:** Critical - Hard Disk drive

**Serviceable:** Yes

**CIM Information:** **Prefix:** PLAT and **ID:** 0176

**SNMP Trap ID:** 5

**Automatically notify Support:** Yes

**User response:**

1. Make sure that the RAID adapter firmware and hard disk drive firmware are at the latest level.
2. Make sure that the SAS cable is connected correctly.
3. Replace the SAS cable.
4. Replace the RAID adapter.
5. Replace the hard disk drive that is indicated by a lit status LED.

**806f060d-0406ffff Array [ComputerSystemElementName] has failed. (Drive 6)**

**Explanation:** This message is for the use case when an implementation has detected that an Array Failed.

May also be shown as 806f060d0406ffff or 0x806f060d0406ffff

**Severity:** Error

**Alert Category:** Critical - Hard Disk drive

**Serviceable:** Yes

**CIM Information:** **Prefix:** PLAT and **ID:** 0176

**SNMP Trap ID:** 5

**Automatically notify Support:** Yes

**User response:**

1. Make sure that the RAID adapter firmware and hard disk drive firmware are at the latest level.
2. Make sure that the SAS cable is connected correctly.
3. Replace the SAS cable.
4. Replace the RAID adapter.
5. Replace the hard disk drive that is indicated by a lit status LED.

**806f060d-0407ffff Array [ComputerSystemElementName] has failed. (Drive 7)**

**Explanation:** This message is for the use case when an implementation has detected that an Array Failed.

May also be shown as 806f060d0407ffff or 0x806f060d0407ffff

**Severity:** Error

**Alert Category:** Critical - Hard Disk drive

**Serviceable:** Yes

**CIM Information:** **Prefix:** PLAT and **ID:** 0176

**SNMP Trap ID:** 5

**Automatically notify Support:** Yes

**User response:**

1. Make sure that the RAID adapter firmware and hard disk drive firmware are at the latest level.
2. Make sure that the SAS cable is connected correctly.
3. Replace the SAS cable.
4. Replace the RAID adapter.
5. Replace the hard disk drive that is indicated by a lit status LED.

**806f060d-0408ffff Array [ComputerSystemElementName] has failed. (Drive 8)**

**Explanation:** This message is for the use case when an implementation has detected that an Array Failed.

May also be shown as 806f060d0408ffff or 0x806f060d0408ffff

**Severity:** Error

**Alert Category:** Critical - Hard Disk drive

**Serviceable:** Yes

**CIM Information:** **Prefix:** PLAT and **ID:** 0176

**SNMP Trap ID:** 5

**Automatically notify Support:** Yes

**User response:**

1. Make sure that the RAID adapter firmware and hard disk drive firmware are at the latest level.
2. Make sure that the SAS cable is connected correctly.
3. Replace the SAS cable.
4. Replace the RAID adapter.
5. Replace the hard disk drive that is indicated by a lit status LED.

**806f060d-0409ffff Array [ComputerSystemElementName] has failed. (Drive 9)**

**Explanation:** This message is for the use case when an implementation has detected that an Array Failed.

May also be shown as 806f060d0409ffff or 0x806f060d0409ffff

**Severity:** Error

**Alert Category:** Critical - Hard Disk drive

**Serviceable:** Yes

**CIM Information:** **Prefix:** PLAT and **ID:** 0176

**SNMP Trap ID:** 5

**Automatically notify Support:** Yes

**User response:**

1. Make sure that the RAID adapter firmware and hard disk drive firmware are at the latest level.
2. Make sure that the SAS cable is connected correctly.
3. Replace the SAS cable.
4. Replace the RAID adapter.
5. Replace the hard disk drive that is indicated by a lit status LED.

---

**806f060d-040affff Array [ComputerSystemElementName] has failed. (Drive 10)**

**Explanation:** This message is for the use case when an implementation has detected that an Array Failed.

May also be shown as 806f060d040affff or 0x806f060d040affff

**Severity:** Error

**Alert Category:** Critical - Hard Disk drive

**Serviceable:** Yes

**CIM Information:** **Prefix:** PLAT and **ID:** 0176

**SNMP Trap ID:** 5

**Automatically notify Support:** Yes

**User response:**

1. Make sure that the RAID adapter firmware and hard disk drive firmware are at the latest level.
2. Make sure that the SAS cable is connected correctly.
3. Replace the SAS cable.
4. Replace the RAID adapter.
5. Replace the hard disk drive that is indicated by a lit status LED.

**806f060d-040bffff Array [ComputerSystemElementName] has failed. (Drive 11)**

**Explanation:** This message is for the use case when an implementation has detected that an Array Failed.

May also be shown as 806f060d040bffff or 0x806f060d040bffff

**Severity:** Error

**Alert Category:** Critical - Hard Disk drive

**Serviceable:** Yes

**CIM Information:** **Prefix:** PLAT and **ID:** 0176

**SNMP Trap ID:** 5

**Automatically notify Support:** Yes

**User response:**

1. Make sure that the RAID adapter firmware and hard disk drive firmware are at the latest level.
2. Make sure that the SAS cable is connected correctly.
3. Replace the SAS cable.
4. Replace the RAID adapter.
5. Replace the hard disk drive that is indicated by a lit status LED.

**806f060d-040cffff Array [ComputerSystemElementName] has failed. (Drive 12)**

**Explanation:** This message is for the use case when an implementation has detected that an Array Failed.

May also be shown as 806f060d040cffff or 0x806f060d040cffff

**Severity:** Error

**Alert Category:** Critical - Hard Disk drive

**Serviceable:** Yes

**CIM Information:** **Prefix:** PLAT and **ID:** 0176

**SNMP Trap ID:** 5

**Automatically notify Support:** Yes

**User response:**

1. Make sure that the RAID adapter firmware and hard disk drive firmware are at the latest level.
2. Make sure that the SAS cable is connected correctly.
3. Replace the SAS cable.
4. Replace the RAID adapter.
5. Replace the hard disk drive that is indicated by a lit status LED.

**806f060d-040dffff Array [ComputerSystemElementName] has failed. (Drive 13)**

**Explanation:** This message is for the use case when an implementation has detected that an Array Failed.

May also be shown as 806f060d040dffff or 0x806f060d040dffff

**Severity:** Error

**Alert Category:** Critical - Hard Disk drive

**Serviceable:** Yes

**CIM Information:** **Prefix:** PLAT and **ID:** 0176

**SNMP Trap ID:** 5

**Automatically notify Support:** Yes

**User response:**

1. Make sure that the RAID adapter firmware and hard disk drive firmware are at the latest level.
2. Make sure that the SAS cable is connected correctly.
3. Replace the SAS cable.
4. Replace the RAID adapter.
5. Replace the hard disk drive that is indicated by a lit status LED.

---

**806f060d-040effff Array [ComputerSystemElementName] has failed. (Drive 14)**

**Explanation:** This message is for the use case when an implementation has detected that an Array Failed.

May also be shown as 806f060d040effff or 0x806f060d040effff

**Severity:** Error

**Alert Category:** Critical - Hard Disk drive

**Serviceable:** Yes

**CIM Information:** **Prefix:** PLAT and **ID:** 0176

**SNMP Trap ID:** 5

**Automatically notify Support:** Yes

**User response:**

1. Make sure that the RAID adapter firmware and hard disk drive firmware are at the latest level.
2. Make sure that the SAS cable is connected correctly.
3. Replace the SAS cable.
4. Replace the RAID adapter.
5. Replace the hard disk drive that is indicated by a lit status LED.

**806f060d-040fffff Array [ComputerSystemElementName] has failed. (Drive 15)**

**Explanation:** This message is for the use case when an implementation has detected that an Array Failed.

May also be shown as 806f060d040fffff or 0x806f060d040fffff

**Severity:** Error

**Alert Category:** Critical - Hard Disk drive

**Serviceable:** Yes

**CIM Information:** **Prefix:** PLAT and **ID:** 0176

**SNMP Trap ID:** 5

**Automatically notify Support:** Yes

**User response:**

1. Make sure that the RAID adapter firmware and hard disk drive firmware are at the latest level.
2. Make sure that the SAS cable is connected correctly.
3. Replace the SAS cable.
4. Replace the RAID adapter.
5. Replace the hard disk drive that is indicated by a lit status LED.

**806f060d-0410ffff Array [ComputerSystemElementName] has failed. (Drive 16)**

**Explanation:** This message is for the use case when an implementation has detected that an Array Failed.

May also be shown as 806f060d0410ffff or 0x806f060d0410ffff

**Severity:** Error

**Alert Category:** Critical - Hard Disk drive

**Serviceable:** Yes

**CIM Information:** **Prefix:** PLAT and **ID:** 0176

**SNMP Trap ID:** 5

**Automatically notify Support:** Yes

**User response:**

1. Make sure that the RAID adapter firmware and hard disk drive firmware are at the latest level.
2. Make sure that the SAS cable is connected correctly.
3. Replace the SAS cable.
4. Replace the RAID adapter.
5. Replace the hard disk drive that is indicated by a lit status LED.

**806f060d-0411ffff Array [ComputerSystemElementName] has failed. (Drive 17)**

**Explanation:** This message is for the use case when an implementation has detected that an Array Failed.

May also be shown as 806f060d0411ffff or 0x806f060d0411ffff

**Severity:** Error

**Alert Category:** Critical - Hard Disk drive

**Serviceable:** Yes

**CIM Information:** **Prefix:** PLAT and **ID:** 0176

**SNMP Trap ID:** 5

**Automatically notify Support:** Yes

**User response:**

1. Make sure that the RAID adapter firmware and hard disk drive firmware are at the latest level.
2. Make sure that the SAS cable is connected correctly.
3. Replace the SAS cable.
4. Replace the RAID adapter.
5. Replace the hard disk drive that is indicated by a lit status LED.

---

**806f060d-0412ffff Array [ComputerSystemElementName] has failed. (Drive 18)**

**Explanation:** This message is for the use case when an implementation has detected that an Array Failed.

May also be shown as 806f060d0412ffff or 0x806f060d0412ffff

**Severity:** Error

**Alert Category:** Critical - Hard Disk drive

**Serviceable:** Yes

**CIM Information:** **Prefix:** PLAT and **ID:** 0176

**SNMP Trap ID:** 5

**Automatically notify Support:** Yes

**User response:**

1. Make sure that the RAID adapter firmware and hard disk drive firmware are at the latest level.
2. Make sure that the SAS cable is connected correctly.
3. Replace the SAS cable.
4. Replace the RAID adapter.
5. Replace the hard disk drive that is indicated by a lit status LED.

**806f060d-0413ffff Array [ComputerSystemElementName] has failed. (Drive 19)**

**Explanation:** This message is for the use case when an implementation has detected that an Array Failed.

May also be shown as 806f060d0413ffff or 0x806f060d0413ffff

**Severity:** Error

**Alert Category:** Critical - Hard Disk drive

**Serviceable:** Yes

**CIM Information:** **Prefix:** PLAT and **ID:** 0176

**SNMP Trap ID:** 5

**Automatically notify Support:** Yes

**User response:**

1. Make sure that the RAID adapter firmware and hard disk drive firmware are at the latest level.
2. Make sure that the SAS cable is connected correctly.
3. Replace the SAS cable.
4. Replace the RAID adapter.
5. Replace the hard disk drive that is indicated by a lit status LED.

**806f060d-0414ffff Array [ComputerSystemElementName] has failed. (Drive 20)**

**Explanation:** This message is for the use case when an implementation has detected that an Array Failed.

May also be shown as 806f060d0414ffff or 0x806f060d0414ffff

**Severity:** Error

**Alert Category:** Critical - Hard Disk drive

**Serviceable:** Yes

**CIM Information:** **Prefix:** PLAT and **ID:** 0176

**SNMP Trap ID:** 5

**Automatically notify Support:** Yes

**User response:**

1. Make sure that the RAID adapter firmware and hard disk drive firmware are at the latest level.
2. Make sure that the SAS cable is connected correctly.
3. Replace the SAS cable.
4. Replace the RAID adapter.
5. Replace the hard disk drive that is indicated by a lit status LED.

**806f060d-0415ffff Array [ComputerSystemElementName] has failed. (Drive 21)**

**Explanation:** This message is for the use case when an implementation has detected that an Array Failed.

May also be shown as 806f060d0415ffff or 0x806f060d0415ffff

**Severity:** Error

**Alert Category:** Critical - Hard Disk drive

**Serviceable:** Yes

**CIM Information:** **Prefix:** PLAT and **ID:** 0176

**SNMP Trap ID:** 5

**Automatically notify Support:** Yes

**User response:**

1. Make sure that the RAID adapter firmware and hard disk drive firmware are at the latest level.
2. Make sure that the SAS cable is connected correctly.
3. Replace the SAS cable.
4. Replace the RAID adapter.
5. Replace the hard disk drive that is indicated by a lit status LED.

**806f060d-0416ffff Array [ComputerSystemElementName] has failed. (Drive 22)**

**Explanation:** This message is for the use case when an implementation has detected that an Array Failed.

May also be shown as 806f060d0416ffff or 0x806f060d0416ffff

**Severity:** Error

**Alert Category:** Critical - Hard Disk drive

**Serviceable:** Yes

**CIM Information:** **Prefix:** PLAT and **ID:** 0176

**SNMP Trap ID:** 5

**Automatically notify Support:** Yes

**User response:**

1. Make sure that the RAID adapter firmware and hard disk drive firmware are at the latest level.
2. Make sure that the SAS cable is connected correctly.
3. Replace the SAS cable.
4. Replace the RAID adapter.
5. Replace the hard disk drive that is indicated by a lit status LED.

**806f060d-0417ffff Array [ComputerSystemElementName] has failed. (Drive 23)**

**Explanation:** This message is for the use case when an implementation has detected that an Array Failed.

May also be shown as 806f060d0417ffff or 0x806f060d0417ffff

**Severity:** Error

**Alert Category:** Critical - Hard Disk drive

**Serviceable:** Yes

**CIM Information:** **Prefix:** PLAT and **ID:** 0176

**SNMP Trap ID:** 5

**Automatically notify Support:** Yes

**User response:**

1. Make sure that the RAID adapter firmware and hard disk drive firmware are at the latest level.
2. Make sure that the SAS cable is connected correctly.
3. Replace the SAS cable.
4. Replace the RAID adapter.
5. Replace the hard disk drive that is indicated by a lit status LED.

**806f060d-0418ffff Array [ComputerSystemElementName] has failed. (Drive 24)**

**Explanation:** This message is for the use case when an implementation has detected that an Array Failed.

May also be shown as 806f060d0418ffff or 0x806f060d0418ffff

**Severity:** Error

**Alert Category:** Critical - Hard Disk drive

**Serviceable:** Yes

**CIM Information:** **Prefix:** PLAT and **ID:** 0176

**SNMP Trap ID:** 5

**Automatically notify Support:** Yes

**User response:**

1. Make sure that the RAID adapter firmware and hard disk drive firmware are at the latest level.
2. Make sure that the SAS cable is connected correctly.
3. Replace the SAS cable.
4. Replace the RAID adapter.
5. Replace the hard disk drive that is indicated by a lit status LED.

**806f060d-0419ffff Array [ComputerSystemElementName] has failed. (Drive 25)**

**Explanation:** This message is for the use case when an implementation has detected that an Array Failed.

May also be shown as 806f060d0419ffff or 0x806f060d0419ffff

**Severity:** Error

**Alert Category:** Critical - Hard Disk drive

**Serviceable:** Yes

**CIM Information:** **Prefix:** PLAT and **ID:** 0176

**SNMP Trap ID:** 5

**Automatically notify Support:** Yes

**User response:**

1. Make sure that the RAID adapter firmware and hard disk drive firmware are at the latest level.
2. Make sure that the SAS cable is connected correctly.
3. Replace the SAS cable.
4. Replace the RAID adapter.
5. Replace the hard disk drive that is indicated by a lit status LED.

---

**806f060d-041affff Array [ComputerSystemElementName] has failed. (Drive 26)**

**Explanation:** This message is for the use case when an implementation has detected that an Array Failed.

May also be shown as 806f060d041affff or 0x806f060d041affff

**Severity:** Error

**Alert Category:** Critical - Hard Disk drive

**Serviceable:** Yes

**CIM Information:** **Prefix:** PLAT and **ID:** 0176

**SNMP Trap ID:** 5

**Automatically notify Support:** Yes

**User response:**

1. Make sure that the RAID adapter firmware and hard disk drive firmware are at the latest level.
2. Make sure that the SAS cable is connected correctly.
3. Replace the SAS cable.
4. Replace the RAID adapter.
5. Replace the hard disk drive that is indicated by a lit status LED.

**806f060d-041bffff Array [ComputerSystemElementName] has failed. (Drive 27)**

**Explanation:** This message is for the use case when an implementation has detected that an Array Failed.

May also be shown as 806f060d041bffff or 0x806f060d041bffff

**Severity:** Error

**Alert Category:** Critical - Hard Disk drive

**Serviceable:** Yes

**CIM Information:** **Prefix:** PLAT and **ID:** 0176

**SNMP Trap ID:** 5

**Automatically notify Support:** Yes

**User response:**

1. Make sure that the RAID adapter firmware and hard disk drive firmware are at the latest level.
2. Make sure that the SAS cable is connected correctly.
3. Replace the SAS cable.
4. Replace the RAID adapter.
5. Replace the hard disk drive that is indicated by a lit status LED.

**806f060d-041cffff Array [ComputerSystemElementName] has failed. (Drive 28)**

**Explanation:** This message is for the use case when an implementation has detected that an Array Failed.

May also be shown as 806f060d041cffff or 0x806f060d041cffff

**Severity:** Error

**Alert Category:** Critical - Hard Disk drive

**Serviceable:** Yes

**CIM Information:** **Prefix:** PLAT and **ID:** 0176

**SNMP Trap ID:** 5

**Automatically notify Support:** Yes

**User response:**

1. Make sure that the RAID adapter firmware and hard disk drive firmware are at the latest level.
2. Make sure that the SAS cable is connected correctly.
3. Replace the SAS cable.
4. Replace the RAID adapter.
5. Replace the hard disk drive that is indicated by a lit status LED.

**806f060d-041dffff Array [ComputerSystemElementName] has failed. (Drive 29)**

**Explanation:** This message is for the use case when an implementation has detected that an Array Failed.

May also be shown as 806f060d041dffff or 0x806f060d041dffff

**Severity:** Error

**Alert Category:** Critical - Hard Disk drive

**Serviceable:** Yes

**CIM Information:** **Prefix:** PLAT and **ID:** 0176

**SNMP Trap ID:** 5

**Automatically notify Support:** Yes

**User response:**

1. Make sure that the RAID adapter firmware and hard disk drive firmware are at the latest level.
2. Make sure that the SAS cable is connected correctly.
3. Replace the SAS cable.
4. Replace the RAID adapter.
5. Replace the hard disk drive that is indicated by a lit status LED.

---

**806f060d-041effff Array [ComputerSystemElementName] has failed. (Drive 30)**

**Explanation:** This message is for the use case when an implementation has detected that an Array Failed.

May also be shown as 806f060d041effff or 0x806f060d041effff

**Severity:** Error

**Alert Category:** Critical - Hard Disk drive

**Serviceable:** Yes

**CIM Information:** **Prefix:** PLAT and **ID:** 0176

**SNMP Trap ID:** 5

**Automatically notify Support:** Yes

**User response:**

1. Make sure that the RAID adapter firmware and hard disk drive firmware are at the latest level.
2. Make sure that the SAS cable is connected correctly.
3. Replace the SAS cable.
4. Replace the RAID adapter.
5. Replace the hard disk drive that is indicated by a lit status LED.

**806f060d-041fffff Array [ComputerSystemElementName] has failed. (Drive 31)**

**Explanation:** This message is for the use case when an implementation has detected that an Array Failed.

May also be shown as 806f060d041fffff or 0x806f060d041fffff

**Severity:** Error

**Alert Category:** Critical - Hard Disk drive

**Serviceable:** Yes

**CIM Information:** **Prefix:** PLAT and **ID:** 0176

**SNMP Trap ID:** 5

**Automatically notify Support:** Yes

**User response:**

1. Make sure that the RAID adapter firmware and hard disk drive firmware are at the latest level.
2. Make sure that the SAS cable is connected correctly.
3. Replace the SAS cable.
4. Replace the RAID adapter.
5. Replace the hard disk drive that is indicated by a lit status LED.

---

**806f070c-2001ffff Configuration Error for [PhysicalMemoryElementName] on Subsystem [MemoryElementName]. (DIMM 1)**

**Explanation:** This message is for the use case when an implementation has detected a Memory DIMM configuration error has been corrected.

May also be shown as 806f070c2001ffff or 0x806f070c2001ffff

**Severity:** Error

**Alert Category:** Critical - Memory

**Serviceable:** Yes

**CIM Information:** **Prefix:** PLAT and **ID:** 0126

**SNMP Trap ID:** 41

**Automatically notify Support:** No

**User response:** Make sure that DIMMs are installed in the correct sequence and have the same size, type, speed, and technology.

---

**806f070c-2002ffff Configuration Error for [PhysicalMemoryElementName] on Subsystem [MemoryElementName]. (DIMM 2)**

**Explanation:** This message is for the use case when an implementation has detected a Memory DIMM configuration error has been corrected.

May also be shown as 806f070c2002ffff or 0x806f070c2002ffff

**Severity:** Error

**Alert Category:** Critical - Memory

**Serviceable:** Yes

**CIM Information:** **Prefix:** PLAT and **ID:** 0126

**SNMP Trap ID:** 41

**Automatically notify Support:** No

**User response:** Make sure that DIMMs are installed in the correct sequence and have the same size, type, speed, and technology.

**806f070c-2003ffff Configuration Error for [PhysicalMemoryElementName] on Subsystem [MemoryElementName]. (DIMM 3)**

**Explanation:** This message is for the use case when an implementation has detected a Memory DIMM configuration error has been corrected.

May also be shown as 806f070c2003ffff or 0x806f070c2003ffff

**Severity:** Error

**Alert Category:** Critical - Memory

**Serviceable:** Yes

**CIM Information:** **Prefix:** PLAT and **ID:** 0126

**SNMP Trap ID:** 41

**Automatically notify Support:** No

**User response:** Make sure that DIMMs are installed in the correct sequence and have the same size, type, speed, and technology.

---

**806f070c-2004ffff Configuration Error for [PhysicalMemoryElementName] on Subsystem [MemoryElementName]. (DIMM 4)**

**Explanation:** This message is for the use case when an implementation has detected a Memory DIMM configuration error has been corrected.

May also be shown as 806f070c2004ffff or 0x806f070c2004ffff

**Severity:** Error

**Alert Category:** Critical - Memory

**Serviceable:** Yes

**CIM Information:** **Prefix:** PLAT and **ID:** 0126

**SNMP Trap ID:** 41

**Automatically notify Support:** No

**User response:** Make sure that DIMMs are installed in the correct sequence and have the same size, type, speed, and technology.

---

**806f070c-2005ffff Configuration Error for [PhysicalMemoryElementName] on Subsystem [MemoryElementName]. (DIMM 5)**

**Explanation:** This message is for the use case when an implementation has detected a Memory DIMM configuration error has been corrected.

May also be shown as 806f070c2005ffff or 0x806f070c2005ffff

**Severity:** Error

**Alert Category:** Critical - Memory

**Serviceable:** Yes

**CIM Information:** **Prefix:** PLAT and **ID:** 0126

**SNMP Trap ID:** 41

**Automatically notify Support:** No

**User response:** Make sure that DIMMs are installed in the correct sequence and have the same size, type, speed, and technology.

**806f070c-2006ffff Configuration Error for [PhysicalMemoryElementName] on Subsystem [MemoryElementName]. (DIMM 6)**

**Explanation:** This message is for the use case when an implementation has detected a Memory DIMM configuration error has been corrected.

May also be shown as 806f070c2006ffff or 0x806f070c2006ffff

**Severity:** Error

**Alert Category:** Critical - Memory

**Serviceable:** Yes

**CIM Information:** **Prefix:** PLAT and **ID:** 0126

**SNMP Trap ID:** 41

**Automatically notify Support:** No

**User response:** Make sure that DIMMs are installed in the correct sequence and have the same size, type, speed, and technology.

---

**806f070c-2007ffff Configuration Error for [PhysicalMemoryElementName] on Subsystem [MemoryElementName]. (DIMM 7)**

**Explanation:** This message is for the use case when an implementation has detected a Memory DIMM configuration error has been corrected.

May also be shown as 806f070c2007ffff or 0x806f070c2007ffff

**Severity:** Error

**Alert Category:** Critical - Memory

**Serviceable:** Yes

**CIM Information:** **Prefix:** PLAT and **ID:** 0126

**SNMP Trap ID:** 41

**Automatically notify Support:** No

**User response:** Make sure that DIMMs are installed in the correct sequence and have the same size, type, speed, and technology.

---

**806f070c-2008ffff Configuration Error for [PhysicalMemoryElementName] on Subsystem [MemoryElementName]. (DIMM 8)**

**Explanation:** This message is for the use case when an implementation has detected a Memory DIMM configuration error has been corrected.

May also be shown as 806f070c2008ffff or 0x806f070c2008ffff

**Severity:** Error

**Alert Category:** Critical - Memory

**Serviceable:** Yes

**CIM Information:** **Prefix:** PLAT and **ID:** 0126

**SNMP Trap ID:** 41

**Automatically notify Support:** No

**User response:** Make sure that DIMMs are installed in the correct sequence and have the same size, type, speed, and technology.

**806f070c-2009ffff Configuration Error for [PhysicalMemoryElementName] on Subsystem [MemoryElementName]. (DIMM 9)**

**Explanation:** This message is for the use case when an implementation has detected a Memory DIMM configuration error has been corrected.

May also be shown as 806f070c2009ffff or 0x806f070c2009ffff

**Severity:** Error

**Alert Category:** Critical - Memory

**Serviceable:** Yes

**CIM Information:** **Prefix:** PLAT and **ID:** 0126

**SNMP Trap ID:** 41

**Automatically notify Support:** No

**User response:** Make sure that DIMMs are installed in the correct sequence and have the same size, type, speed, and technology.

---

**806f070c-200affff Configuration Error for [PhysicalMemoryElementName] on Subsystem [MemoryElementName]. (DIMM 10)**

**Explanation:** This message is for the use case when an implementation has detected a Memory DIMM configuration error has been corrected.

May also be shown as 806f070c200affff or 0x806f070c200affff

**Severity:** Error

**Alert Category:** Critical - Memory

**Serviceable:** Yes

**CIM Information:** **Prefix:** PLAT and **ID:** 0126

**SNMP Trap ID:** 41

**Automatically notify Support:** No

**User response:** Make sure that DIMMs are installed in the correct sequence and have the same size, type, speed, and technology.

---

**806f070c-200bffff Configuration Error for [PhysicalMemoryElementName] on Subsystem [MemoryElementName]. (DIMM 11)**

**Explanation:** This message is for the use case when an implementation has detected a Memory DIMM configuration error has been corrected.

May also be shown as 806f070c200bffff or 0x806f070c200bffff

**Severity:** Error

**Alert Category:** Critical - Memory

**Serviceable:** Yes

**CIM Information:** **Prefix:** PLAT and **ID:** 0126

**SNMP Trap ID:** 41

**Automatically notify Support:** No

**User response:** Make sure that DIMMs are installed in the correct sequence and have the same size, type, speed, and technology.

**806f070c-200cffff Configuration Error for [PhysicalMemoryElementName] on Subsystem [MemoryElementName]. (DIMM 12)**

**Explanation:** This message is for the use case when an implementation has detected a Memory DIMM configuration error has been corrected.

May also be shown as 806f070c200cffff or 0x806f070c200cffff

**Severity:** Error

**Alert Category:** Critical - Memory

**Serviceable:** Yes

**CIM Information:** **Prefix:** PLAT and **ID:** 0126

**SNMP Trap ID:** 41

**Automatically notify Support:** No

**User response:** Make sure that DIMMs are installed in the correct sequence and have the same size, type, speed, and technology.

---

**806f070c-200dffff Configuration Error for [PhysicalMemoryElementName] on Subsystem [MemoryElementName]. (DIMM 13)**

**Explanation:** This message is for the use case when an implementation has detected a Memory DIMM configuration error has been corrected.

May also be shown as 806f070c200dffff or 0x806f070c200dffff

**Severity:** Error

**Alert Category:** Critical - Memory

**Serviceable:** Yes

**CIM Information:** **Prefix:** PLAT and **ID:** 0126

**SNMP Trap ID:** 41

**Automatically notify Support:** No

**User response:** Make sure that DIMMs are installed in the correct sequence and have the same size, type, speed, and technology.

---

**806f070c-200effff Configuration Error for [PhysicalMemoryElementName] on Subsystem [MemoryElementName]. (DIMM 14)**

**Explanation:** This message is for the use case when an implementation has detected a Memory DIMM configuration error has been corrected.

May also be shown as 806f070c200effff or 0x806f070c200effff

**Severity:** Error

**Alert Category:** Critical - Memory

**Serviceable:** Yes

**CIM Information:** **Prefix:** PLAT and **ID:** 0126

**SNMP Trap ID:** 41

**Automatically notify Support:** No

**User response:** Make sure that DIMMs are installed in the correct sequence and have the same size, type, speed, and technology.

**806f070c-200fffff Configuration Error for [PhysicalMemoryElementName] on Subsystem [MemoryElementName]. (DIMM 15)**

**Explanation:** This message is for the use case when an implementation has detected a Memory DIMM configuration error has been corrected.

May also be shown as 806f070c200fffff or 0x806f070c200fffff

**Severity:** Error

**Alert Category:** Critical - Memory

**Serviceable:** Yes

**CIM Information:** **Prefix:** PLAT and **ID:** 0126

**SNMP Trap ID:** 41

**Automatically notify Support:** No

**User response:** Make sure that DIMMs are installed in the correct sequence and have the same size, type, speed, and technology.

---

**806f070c-2010ffff Configuration Error for [PhysicalMemoryElementName] on Subsystem [MemoryElementName]. (DIMM 16)**

**Explanation:** This message is for the use case when an implementation has detected a Memory DIMM configuration error has been corrected.

May also be shown as 806f070c2010ffff or 0x806f070c2010ffff

**Severity:** Error

**Alert Category:** Critical - Memory

**Serviceable:** Yes

**CIM Information:** **Prefix:** PLAT and **ID:** 0126

**SNMP Trap ID:** 41

**Automatically notify Support:** No

**User response:** Make sure that DIMMs are installed in the correct sequence and have the same size, type, speed, and technology.

---

**806f070c-2011ffff Configuration Error for [PhysicalMemoryElementName] on Subsystem [MemoryElementName]. (DIMM 17)**

**Explanation:** This message is for the use case when an implementation has detected a Memory DIMM configuration error has been corrected.

May also be shown as 806f070c2011ffff or 0x806f070c2011ffff

**Severity:** Error

**Alert Category:** Critical - Memory

**Serviceable:** Yes

**CIM Information:** **Prefix:** PLAT and **ID:** 0126

**SNMP Trap ID:** 41

**Automatically notify Support:** No

**User response:** Make sure that DIMMs are installed in the correct sequence and have the same size, type, speed, and technology.

**806f070c-2012ffff Configuration Error for [PhysicalMemoryElementName] on Subsystem [MemoryElementName]. (DIMM 18)**

**Explanation:** This message is for the use case when an implementation has detected a Memory DIMM configuration error has been corrected.

May also be shown as 806f070c2012ffff or 0x806f070c2012ffff

**Severity:** Error

**Alert Category:** Critical - Memory

**Serviceable:** Yes

**CIM Information:** **Prefix:** PLAT and **ID:** 0126

**SNMP Trap ID:** 41

**Automatically notify Support:** No

**User response:** Make sure that DIMMs are installed in the correct sequence and have the same size, type, speed, and technology.

---

**806f070c-2013ffff Configuration Error for [PhysicalMemoryElementName] on Subsystem [MemoryElementName]. (DIMM 19)**

**Explanation:** This message is for the use case when an implementation has detected a Memory DIMM configuration error has been corrected.

May also be shown as 806f070c2013ffff or 0x806f070c2013ffff

**Severity:** Error

**Alert Category:** Critical - Memory

**Serviceable:** Yes

**CIM Information:** **Prefix:** PLAT and **ID:** 0126

**SNMP Trap ID:** 41

**Automatically notify Support:** No

**User response:** Make sure that DIMMs are installed in the correct sequence and have the same size, type, speed, and technology.

---

**806f070c-2014ffff Configuration Error for [PhysicalMemoryElementName] on Subsystem [MemoryElementName]. (DIMM 20)**

**Explanation:** This message is for the use case when an implementation has detected a Memory DIMM configuration error has been corrected.

May also be shown as 806f070c2014ffff or 0x806f070c2014ffff

**Severity:** Error

**Alert Category:** Critical - Memory

**Serviceable:** Yes

**CIM Information:** **Prefix:** PLAT and **ID:** 0126

**SNMP Trap ID:** 41

**Automatically notify Support:** No

**User response:** Make sure that DIMMs are installed in the correct sequence and have the same size, type, speed, and technology.

**806f070c-2015ffff Configuration Error for [PhysicalMemoryElementName] on Subsystem [MemoryElementName]. (DIMM 21)**

**Explanation:** This message is for the use case when an implementation has detected a Memory DIMM configuration error has been corrected.

May also be shown as 806f070c2015ffff or 0x806f070c2015ffff

**Severity:** Error

**Alert Category:** Critical - Memory

**Serviceable:** Yes

**CIM Information:** **Prefix:** PLAT and **ID:** 0126

**SNMP Trap ID:** 41

**Automatically notify Support:** No

**User response:** Make sure that DIMMs are installed in the correct sequence and have the same size, type, speed, and technology.

---

**806f070c-2016ffff Configuration Error for [PhysicalMemoryElementName] on Subsystem [MemoryElementName]. (DIMM 22)**

**Explanation:** This message is for the use case when an implementation has detected a Memory DIMM configuration error has been corrected.

May also be shown as 806f070c2016ffff or 0x806f070c2016ffff

**Severity:** Error

**Alert Category:** Critical - Memory

**Serviceable:** Yes

**CIM Information:** **Prefix:** PLAT and **ID:** 0126

**SNMP Trap ID:** 41

**Automatically notify Support:** No

**User response:** Make sure that DIMMs are installed in the correct sequence and have the same size, type, speed, and technology.

---

**806f070c-2017ffff Configuration Error for [PhysicalMemoryElementName] on Subsystem [MemoryElementName]. (DIMM 23)**

**Explanation:** This message is for the use case when an implementation has detected a Memory DIMM configuration error has been corrected.

May also be shown as 806f070c2017ffff or 0x806f070c2017ffff

**Severity:** Error

**Alert Category:** Critical - Memory

**Serviceable:** Yes

**CIM Information:** **Prefix:** PLAT and **ID:** 0126

**SNMP Trap ID:** 41

**Automatically notify Support:** No

**User response:** Make sure that DIMMs are installed in the correct sequence and have the same size, type, speed, and technology.

**806f070c-2018ffff Configuration Error for [PhysicalMemoryElementName] on Subsystem [MemoryElementName]. (DIMM 24)**

**Explanation:** This message is for the use case when an implementation has detected a Memory DIMM configuration error has been corrected.

May also be shown as 806f070c2018ffff or 0x806f070c2018ffff

**Severity:** Error

**Alert Category:** Critical - Memory

**Serviceable:** Yes

**CIM Information:** **Prefix:** PLAT and **ID:** 0126

**SNMP Trap ID:** 41

**Automatically notify Support:** No

**User response:** Make sure that DIMMs are installed in the correct sequence and have the same size, type, speed, and technology.

---

**806f070c-2581ffff Configuration Error for [PhysicalMemoryElementName] on Subsystem [MemoryElementName]. (All DIMMS)**

**Explanation:** This message is for the use case when an implementation has detected a Memory DIMM configuration error has been corrected.

May also be shown as 806f070c2581ffff or 0x806f070c2581ffff

**Severity:** Error

**Alert Category:** Critical - Memory

**Serviceable:** Yes

**CIM Information:** **Prefix:** PLAT and **ID:** 0126

**SNMP Trap ID:** 41

**Automatically notify Support:** No

**User response:** Make sure that DIMMs are installed in the correct sequence and have the same size, type, speed, and technology. One of the DIMMs :

---

**806f070d-0400ffff Rebuild in progress for Array in system [ComputerSystemElementName]. (Drive 0)**

**Explanation:** This message is for the use case when an implementation has detected that an Array Rebuild is in Progress.

May also be shown as 806f070d0400ffff or 0x806f070d0400ffff

**Severity:** Info

**Alert Category:** System - Other

**Serviceable:** No

**CIM Information:** **Prefix:** PLAT and **ID:** 0178

**SNMP Trap ID:**

**Automatically notify Support:** No

**User response:** No action; information only.

**806f070d-0401ffff Rebuild in progress for Array in system [ComputerSystemElementName]. (Drive 1)**

**Explanation:** This message is for the use case when an implementation has detected that an Array Rebuild is in Progress.

May also be shown as 806f070d0401ffff or 0x806f070d0401ffff

**Severity:** Info

**Alert Category:** System - Other

**Serviceable:** No

**CIM Information:** **Prefix:** PLAT and **ID:** 0178

**SNMP Trap ID:**

**Automatically notify Support:** No

**User response:** No action; information only.

---

**806f070d-0402ffff Rebuild in progress for Array in system [ComputerSystemElementName]. (Drive 2)**

**Explanation:** This message is for the use case when an implementation has detected that an Array Rebuild is in Progress.

May also be shown as 806f070d0402ffff or 0x806f070d0402ffff

**Severity:** Info

**Alert Category:** System - Other

**Serviceable:** No

**CIM Information:** **Prefix:** PLAT and **ID:** 0178

**SNMP Trap ID:**

**Automatically notify Support:** No

**User response:** No action; information only.

---

**806f070d-0403ffff Rebuild in progress for Array in system [ComputerSystemElementName]. (Drive 3)**

**Explanation:** This message is for the use case when an implementation has detected that an Array Rebuild is in Progress.

May also be shown as 806f070d0403ffff or 0x806f070d0403ffff

**Severity:** Info

**Alert Category:** System - Other

**Serviceable:** No

**CIM Information:** **Prefix:** PLAT and **ID:** 0178

**SNMP Trap ID:**

**Automatically notify Support:** No

**User response:** No action; information only.

**806f070d-0404ffff Rebuild in progress for Array in system [ComputerSystemElementName]. (Drive 4)**

**Explanation:** This message is for the use case when an implementation has detected that an Array Rebuild is in Progress.

May also be shown as 806f070d0404ffff or 0x806f070d0404ffff

**Severity:** Info

**Alert Category:** System - Other

**Serviceable:** No

**CIM Information:** **Prefix:** PLAT and **ID:** 0178

**SNMP Trap ID:**

**Automatically notify Support:** No

**User response:** No action; information only.

---

**806f070d-0405ffff Rebuild in progress for Array in system [ComputerSystemElementName]. (Drive 5)**

**Explanation:** This message is for the use case when an implementation has detected that an Array Rebuild is in Progress.

May also be shown as 806f070d0405ffff or 0x806f070d0405ffff

**Severity:** Info

**Alert Category:** System - Other

**Serviceable:** No

**CIM Information:** **Prefix:** PLAT and **ID:** 0178

**SNMP Trap ID:**

**Automatically notify Support:** No

**User response:** No action; information only.

---

**806f070d-0406ffff Rebuild in progress for Array in system [ComputerSystemElementName]. (Drive 6)**

**Explanation:** This message is for the use case when an implementation has detected that an Array Rebuild is in Progress.

May also be shown as 806f070d0406ffff or 0x806f070d0406ffff

**Severity:** Info

**Alert Category:** System - Other

**Serviceable:** No

**CIM Information:** **Prefix:** PLAT and **ID:** 0178

**SNMP Trap ID:**

**Automatically notify Support:** No

**User response:** No action; information only.

**806f070d-0407ffff Rebuild in progress for Array in system [ComputerSystemElementName]. (Drive 7)**

**Explanation:** This message is for the use case when an implementation has detected that an Array Rebuild is in Progress.

May also be shown as 806f070d0407ffff or 0x806f070d0407ffff

**Severity:** Info

**Alert Category:** System - Other

**Serviceable:** No

**CIM Information:** **Prefix:** PLAT and **ID:** 0178

**SNMP Trap ID:**

**Automatically notify Support:** No

**User response:** No action; information only.

---

**806f070d-0408ffff Rebuild in progress for Array in system [ComputerSystemElementName]. (Drive 8)**

**Explanation:** This message is for the use case when an implementation has detected that an Array Rebuild is in Progress.

May also be shown as 806f070d0408ffff or 0x806f070d0408ffff

**Severity:** Info

**Alert Category:** System - Other

**Serviceable:** No

**CIM Information:** **Prefix:** PLAT and **ID:** 0178

**SNMP Trap ID:**

**Automatically notify Support:** No

**User response:** No action; information only.

---

**806f070d-0409ffff Rebuild in progress for Array in system [ComputerSystemElementName]. (Drive 9)**

**Explanation:** This message is for the use case when an implementation has detected that an Array Rebuild is in Progress.

May also be shown as 806f070d0409ffff or 0x806f070d0409ffff

**Severity:** Info

**Alert Category:** System - Other

**Serviceable:** No

**CIM Information:** **Prefix:** PLAT and **ID:** 0178

**SNMP Trap ID:**

**Automatically notify Support:** No

**User response:** No action; information only.

**806f070d-040affff Rebuild in progress for Array in system [ComputerSystemElementName]. (Drive 10)**

**Explanation:** This message is for the use case when an implementation has detected that an Array Rebuild is in Progress.

May also be shown as 806f070d040affff or 0x806f070d040affff

**Severity:** Info

**Alert Category:** System - Other

**Serviceable:** No

**CIM Information:** **Prefix:** PLAT and **ID:** 0178

**SNMP Trap ID:**

**Automatically notify Support:** No

**User response:** No action; information only.

---

**806f070d-040bffff Rebuild in progress for Array in system [ComputerSystemElementName]. (Drive 11)**

**Explanation:** This message is for the use case when an implementation has detected that an Array Rebuild is in Progress.

May also be shown as 806f070d040bffff or 0x806f070d040bffff

**Severity:** Info

**Alert Category:** System - Other

**Serviceable:** No

**CIM Information:** **Prefix:** PLAT and **ID:** 0178

**SNMP Trap ID:**

**Automatically notify Support:** No

**User response:** No action; information only.

---

**806f070d-040cffff Rebuild in progress for Array in system [ComputerSystemElementName]. (Drive 12)**

**Explanation:** This message is for the use case when an implementation has detected that an Array Rebuild is in Progress.

May also be shown as 806f070d040cffff or 0x806f070d040cffff

**Severity:** Info

**Alert Category:** System - Other

**Serviceable:** No

**CIM Information:** **Prefix:** PLAT and **ID:** 0178

**SNMP Trap ID:**

**Automatically notify Support:** No

**User response:** No action; information only.

**806f070d-040dffff Rebuild in progress for Array in system [ComputerSystemElementName]. (Drive 13)**

**Explanation:** This message is for the use case when an implementation has detected that an Array Rebuild is in Progress.

May also be shown as 806f070d040dffff or 0x806f070d040dffff

**Severity:** Info

**Alert Category:** System - Other

**Serviceable:** No

**CIM Information:** **Prefix:** PLAT and **ID:** 0178

**SNMP Trap ID:**

**Automatically notify Support:** No

**User response:** No action; information only.

---

**806f070d-040effff Rebuild in progress for Array in system [ComputerSystemElementName]. (Drive 14)**

**Explanation:** This message is for the use case when an implementation has detected that an Array Rebuild is in Progress.

May also be shown as 806f070d040effff or 0x806f070d040effff

**Severity:** Info

**Alert Category:** System - Other

**Serviceable:** No

**CIM Information:** **Prefix:** PLAT and **ID:** 0178

**SNMP Trap ID:**

**Automatically notify Support:** No

**User response:** No action; information only.

---

**806f070d-040fffff Rebuild in progress for Array in system [ComputerSystemElementName]. (Drive 15)**

**Explanation:** This message is for the use case when an implementation has detected that an Array Rebuild is in Progress.

May also be shown as 806f070d040fffff or 0x806f070d040fffff

**Severity:** Info

**Alert Category:** System - Other

**Serviceable:** No

**CIM Information:** **Prefix:** PLAT and **ID:** 0178

**SNMP Trap ID:**

**Automatically notify Support:** No

**User response:** No action; information only.

**806f070d-0410ffff Rebuild in progress for Array in system [ComputerSystemElementName]. (Drive 16)**

**Explanation:** This message is for the use case when an implementation has detected that an Array Rebuild is in Progress.

May also be shown as 806f070d0410ffff or 0x806f070d0410ffff

**Severity:** Info

**Alert Category:** System - Other

**Serviceable:** No

**CIM Information:** **Prefix:** PLAT and **ID:** 0178

**SNMP Trap ID:**

**Automatically notify Support:** No

**User response:** No action; information only.

---

**806f070d-0411ffff Rebuild in progress for Array in system [ComputerSystemElementName]. (Drive 17)**

**Explanation:** This message is for the use case when an implementation has detected that an Array Rebuild is in Progress.

May also be shown as 806f070d0411ffff or 0x806f070d0411ffff

**Severity:** Info

**Alert Category:** System - Other

**Serviceable:** No

**CIM Information:** **Prefix:** PLAT and **ID:** 0178

**SNMP Trap ID:**

**Automatically notify Support:** No

**User response:** No action; information only.

---

**806f070d-0412ffff Rebuild in progress for Array in system [ComputerSystemElementName]. (Drive 18)**

**Explanation:** This message is for the use case when an implementation has detected that an Array Rebuild is in Progress.

May also be shown as 806f070d0412ffff or 0x806f070d0412ffff

**Severity:** Info

**Alert Category:** System - Other

**Serviceable:** No

**CIM Information:** **Prefix:** PLAT and **ID:** 0178

**SNMP Trap ID:**

**Automatically notify Support:** No

**User response:** No action; information only.

**806f070d-0413ffff Rebuild in progress for Array in system [ComputerSystemElementName]. (Drive 19)**

**Explanation:** This message is for the use case when an implementation has detected that an Array Rebuild is in Progress.

May also be shown as 806f070d0413ffff or 0x806f070d0413ffff

**Severity:** Info

**Alert Category:** System - Other

**Serviceable:** No

**CIM Information:** **Prefix:** PLAT and **ID:** 0178

**SNMP Trap ID:**

**Automatically notify Support:** No

**User response:** No action; information only.

---

**806f070d-0414ffff Rebuild in progress for Array in system [ComputerSystemElementName]. (Drive 20)**

**Explanation:** This message is for the use case when an implementation has detected that an Array Rebuild is in Progress.

May also be shown as 806f070d0414ffff or 0x806f070d0414ffff

**Severity:** Info

**Alert Category:** System - Other

**Serviceable:** No

**CIM Information:** **Prefix:** PLAT and **ID:** 0178

**SNMP Trap ID:**

**Automatically notify Support:** No

**User response:** No action; information only.

---

**806f070d-0415ffff Rebuild in progress for Array in system [ComputerSystemElementName]. (Drive 21)**

**Explanation:** This message is for the use case when an implementation has detected that an Array Rebuild is in Progress.

May also be shown as 806f070d0415ffff or 0x806f070d0415ffff

**Severity:** Info

**Alert Category:** System - Other

**Serviceable:** No

**CIM Information:** **Prefix:** PLAT and **ID:** 0178

**SNMP Trap ID:**

**Automatically notify Support:** No

**User response:** No action; information only.

**806f070d-0416ffff Rebuild in progress for Array in system [ComputerSystemElementName]. (Drive 22)**

**Explanation:** This message is for the use case when an implementation has detected that an Array Rebuild is in Progress.

May also be shown as 806f070d0416ffff or 0x806f070d0416ffff

**Severity:** Info

**Alert Category:** System - Other

**Serviceable:** No

**CIM Information:** **Prefix:** PLAT and **ID:** 0178

**SNMP Trap ID:**

**Automatically notify Support:** No

**User response:** No action; information only.

---

**806f070d-0417ffff Rebuild in progress for Array in system [ComputerSystemElementName]. (Drive 23)**

**Explanation:** This message is for the use case when an implementation has detected that an Array Rebuild is in Progress.

May also be shown as 806f070d0417ffff or 0x806f070d0417ffff

**Severity:** Info

**Alert Category:** System - Other

**Serviceable:** No

**CIM Information:** **Prefix:** PLAT and **ID:** 0178

**SNMP Trap ID:**

**Automatically notify Support:** No

**User response:** No action; information only.

---

**806f070d-0418ffff Rebuild in progress for Array in system [ComputerSystemElementName]. (Drive 24)**

**Explanation:** This message is for the use case when an implementation has detected that an Array Rebuild is in Progress.

May also be shown as 806f070d0418ffff or 0x806f070d0418ffff

**Severity:** Info

**Alert Category:** System - Other

**Serviceable:** No

**CIM Information:** **Prefix:** PLAT and **ID:** 0178

**SNMP Trap ID:**

**Automatically notify Support:** No

**User response:** No action; information only.

**806f070d-0419ffff Rebuild in progress for Array in system [ComputerSystemElementName]. (Drive 25)**

**Explanation:** This message is for the use case when an implementation has detected that an Array Rebuild is in Progress.

May also be shown as 806f070d0419ffff or 0x806f070d0419ffff

**Severity:** Info

**Alert Category:** System - Other

**Serviceable:** No

**CIM Information:** **Prefix:** PLAT and **ID:** 0178

**SNMP Trap ID:**

**Automatically notify Support:** No

**User response:** No action; information only.

---

**806f070d-041affff Rebuild in progress for Array in system [ComputerSystemElementName]. (Drive 26)**

**Explanation:** This message is for the use case when an implementation has detected that an Array Rebuild is in Progress.

May also be shown as 806f070d041affff or 0x806f070d041affff

**Severity:** Info

**Alert Category:** System - Other

**Serviceable:** No

**CIM Information:** **Prefix:** PLAT and **ID:** 0178

**SNMP Trap ID:**

**Automatically notify Support:** No

**User response:** No action; information only.

---

**806f070d-041bffff Rebuild in progress for Array in system [ComputerSystemElementName]. (Drive 27)**

**Explanation:** This message is for the use case when an implementation has detected that an Array Rebuild is in Progress.

May also be shown as 806f070d041bffff or 0x806f070d041bffff

**Severity:** Info

**Alert Category:** System - Other

**Serviceable:** No

**CIM Information:** **Prefix:** PLAT and **ID:** 0178

**SNMP Trap ID:**

**Automatically notify Support:** No

**User response:** No action; information only.

**806f070d-041cffff Rebuild in progress for Array in system [ComputerSystemElementName]. (Drive 28)**

**Explanation:** This message is for the use case when an implementation has detected that an Array Rebuild is in Progress.

May also be shown as 806f070d041cffff or 0x806f070d041cffff

**Severity:** Info

**Alert Category:** System - Other

**Serviceable:** No

**CIM Information:** **Prefix:** PLAT and **ID:** 0178

**SNMP Trap ID:**

**Automatically notify Support:** No

**User response:** No action; information only.

---

**806f070d-041dffff Rebuild in progress for Array in system [ComputerSystemElementName]. (Drive 29)**

**Explanation:** This message is for the use case when an implementation has detected that an Array Rebuild is in Progress.

May also be shown as 806f070d041dffff or 0x806f070d041dffff

**Severity:** Info

**Alert Category:** System - Other

**Serviceable:** No

**CIM Information:** **Prefix:** PLAT and **ID:** 0178

**SNMP Trap ID:**

**Automatically notify Support:** No

**User response:** No action; information only.

---

**806f070d-041effff Rebuild in progress for Array in system [ComputerSystemElementName]. (Drive 30)**

**Explanation:** This message is for the use case when an implementation has detected that an Array Rebuild is in Progress.

May also be shown as 806f070d041effff or 0x806f070d041effff

**Severity:** Info

**Alert Category:** System - Other

**Serviceable:** No

**CIM Information:** **Prefix:** PLAT and **ID:** 0178

**SNMP Trap ID:**

**Automatically notify Support:** No

**User response:** No action; information only.

**806f070d-041fffff Rebuild in progress for Array in system [ComputerSystemElementName]. (Drive 31)**

**Explanation:** This message is for the use case when an implementation has detected that an Array Rebuild is in Progress.

May also be shown as 806f070d041fffff or 0x806f070d041fffff

**Severity:** Info

**Alert Category:** System - Other

**Serviceable:** No

**CIM Information:** **Prefix:** PLAT and **ID:** 0178

**SNMP Trap ID:**

**Automatically notify Support:** No

**User response:** No action; information only.

---

**806f072b-2101ffff A successful software or firmware change was detected on system [ComputerSystemElementName]. (IMM Promotion)**

**Explanation:** This message is for the use case when an implementation has detected a Successful Software or Firmware Change.

May also be shown as 806f072b2101ffff or 0x806f072b2101ffff

**Severity:** Info

**Alert Category:** System - Other

**Serviceable:** No

**CIM Information:** **Prefix:** PLAT and **ID:** 0450

**SNMP Trap ID:**

**Automatically notify Support:** No

**User response:** No action; information only. IMM Recovery :

---

**806f072b-2201ffff A successful software or firmware change was detected on system [ComputerSystemElementName]. (Bkup Auto Update)**

**Explanation:** This message is for the use case when an implementation has detected a Successful Software or Firmware Change.

May also be shown as 806f072b2201ffff or 0x806f072b2201ffff

**Severity:** Info

**Alert Category:** System - Other

**Serviceable:** No

**CIM Information:** **Prefix:** PLAT and **ID:** 0450

**SNMP Trap ID:**

**Automatically notify Support:** No

**User response:** No action; information only. ROM Recovery :

**806f0807-0301ffff [ProcessorElementName] has been Disabled. (CPU 1)**

**Explanation:** This message is for the use case when an implementation has detected a Processor has been Disabled. May also be shown as 806f08070301ffff or 0x806f08070301ffff

**Severity:** Info

**Alert Category:** System - Other

**Serviceable:** No

**CIM Information:** **Prefix:** PLAT and **ID:** 0061

**SNMP Trap ID:**

**Automatically notify Support:** No

**User response:** No action; information only.

**806f0807-0302ffff [ProcessorElementName] has been Disabled. (CPU 2)**

**Explanation:** This message is for the use case when an implementation has detected a Processor has been Disabled. May also be shown as 806f08070302ffff or 0x806f08070302ffff

**Severity:** Info

**Alert Category:** System - Other

**Serviceable:** No

**CIM Information:** **Prefix:** PLAT and **ID:** 0061

**SNMP Trap ID:**

**Automatically notify Support:** No

**User response:** No action; information only.

**806f0807-2584ffff [ProcessorElementName] has been Disabled. (All CPUs)**

**Explanation:** This message is for the use case when an implementation has detected a Processor has been Disabled. May also be shown as 806f08072584ffff or 0x806f08072584ffff

**Severity:** Info

**Alert Category:** System - Other

**Serviceable:** No

**CIM Information:** **Prefix:** PLAT and **ID:** 0061

**SNMP Trap ID:**

**Automatically notify Support:** No

**User response:** No action; information only. One of the CPUs :

**806f0813-2581ffff A Uncorrectable Bus Error has occurred on system [ComputerSystemElementName]. (DIMMs)**

**Explanation:** This message is for the use case when an implementation has detected a Bus Uncorrectable Error.

May also be shown as 806f08132581ffff or 0x806f08132581ffff

**Severity:** Error

**Alert Category:** Critical - Other

**Serviceable:** Yes

**CIM Information:** **Prefix:** PLAT and **ID:** 0240

**SNMP Trap ID:** 50

**Automatically notify Support:** Yes

**User response:**

1. Check the system-event log.
2. Check the DIMM error LEDs.
3. Remove the failing DIMM from the system board.
4. Check for a server firmware update. Important: Some cluster solutions require specific code levels or coordinated code updates. If the device is part of a cluster solution, verify that the latest level of code is supported for the cluster solution before you update the code.
5. Make sure that the installed DIMMs are supported and configured correctly.
6. (Trained technician only) Replace the system board.

**806f0813-2582ffff A Uncorrectable Bus Error has occurred on system [ComputerSystemElementName]. (PCIs)**

**Explanation:** This message is for the use case when an implementation has detected a Bus Uncorrectable Error.

May also be shown as 806f08132582ffff or 0x806f08132582ffff

**Severity:** Error

**Alert Category:** Critical - Other

**Serviceable:** Yes

**CIM Information:** **Prefix:** PLAT and **ID:** 0240

**SNMP Trap ID:** 50

**Automatically notify Support:** Yes

**User response:**

1. Check the system-event log.
2. Check the PCI LED.
3. Remove the adapter from the indicated PCI slot.
4. Check for a server firmware update. Important: Some cluster solutions require specific code levels or coordinated code updates. If the device is part of a cluster solution, verify that the latest level of code is supported for the cluster solution before you update the code.
5. (Trained technician only) Replace the system board.

**806f0813-2584ffff A Uncorrectable Bus Error has occurred on system [ComputerSystemElementName]. (CPUs)**

**Explanation:** This message is for the use case when an implementation has detected a Bus Uncorrectable Error.

May also be shown as 806f08132584ffff or 0x806f08132584ffff

**Severity:** Error

**Alert Category:** Critical - Other

**Serviceable:** Yes

**CIM Information:** **Prefix:** PLAT and **ID:** 0240

**SNMP Trap ID:** 50

**Automatically notify Support:** Yes

**User response:**

1. Check the system-event log.
2. (Trained technician only) Remove the failing microprocessor from the system board (see Removing a microprocessor and heat sink).
3. Check for a server firmware update. Important: Some cluster solutions require specific code levels or coordinated code updates. If the device is part of a cluster solution, verify that the latest level of code is supported for the cluster solution before you update the code.
4. Make sure that the two microprocessors are matching.
5. (Trained technician only) Replace the system board.

**806f0823-2101ffff Watchdog Timer interrupt occurred for [WatchdogElementName]. (IPMI Watchdog)**

**Explanation:** This message is for the use case when an implementation has detected a Watchdog Timer interrupt occurred.

May also be shown as 806f08232101ffff or 0x806f08232101ffff

**Severity:** Info

**Alert Category:** System - Other

**Serviceable:** No

**CIM Information:** **Prefix:** PLAT and **ID:** 0376

**SNMP Trap ID:**

**Automatically notify Support:** No

**User response:** No action; information only.

**806f090c-2001ffff [PhysicalMemoryElementName] on Subsystem [MemoryElementName] Throttled. (DIMM 1)**

**Explanation:** This message is for the use case when an implementation has detected Memory has been Throttled.

May also be shown as 806f090c2001ffff or 0x806f090c2001ffff

**Severity:** Warning

**Alert Category:** System - Other

**Serviceable:** Yes

**CIM Information:** **Prefix:** PLAT and **ID:** 0142

**SNMP Trap ID:** 22

**Automatically notify Support:** No

**User response:**

1. Reseat the DIMM, and then restart the server.
2. Replace DIMM n. (n = DIMM number)

**806f090c-2002ffff [PhysicalMemoryElementName] on Subsystem [MemoryElementName] Throttled. (DIMM 2)**

**Explanation:** This message is for the use case when an implementation has detected Memory has been Throttled.

May also be shown as 806f090c2002ffff or 0x806f090c2002ffff

**Severity:** Warning

**Alert Category:** System - Other

**Serviceable:** Yes

**CIM Information:** **Prefix:** PLAT and **ID:** 0142

**SNMP Trap ID:** 22

**Automatically notify Support:** No

**User response:**

1. Reseat the DIMM, and then restart the server.
2. Replace DIMM n. (n = DIMM number)

---

**806f090c-2003ffff [PhysicalMemoryElementName] on Subsystem [MemoryElementName] Throttled. (DIMM 3)**

**Explanation:** This message is for the use case when an implementation has detected Memory has been Throttled.

May also be shown as 806f090c2003ffff or 0x806f090c2003ffff

**Severity:** Warning

**Alert Category:** System - Other

**Serviceable:** Yes

**CIM Information:** **Prefix:** PLAT and **ID:** 0142

**SNMP Trap ID:** 22

**Automatically notify Support:** No

**User response:**

1. Reseat the DIMM, and then restart the server.
2. Replace DIMM n. (n = DIMM number)

---

**806f090c-2004ffff [PhysicalMemoryElementName] on Subsystem [MemoryElementName] Throttled. (DIMM 4)**

**Explanation:** This message is for the use case when an implementation has detected Memory has been Throttled.

May also be shown as 806f090c2004ffff or 0x806f090c2004ffff

**Severity:** Warning

**Alert Category:** System - Other

**Serviceable:** Yes

**CIM Information:** **Prefix:** PLAT and **ID:** 0142

**SNMP Trap ID:** 22

**Automatically notify Support:** No

**User response:**

1. Reseat the DIMM, and then restart the server.
2. Replace DIMM n. (n = DIMM number)

**806f090c-2005ffff [PhysicalMemoryElementName] on Subsystem [MemoryElementName] Throttled. (DIMM 5)**

**Explanation:** This message is for the use case when an implementation has detected Memory has been Throttled.

May also be shown as 806f090c2005ffff or 0x806f090c2005ffff

**Severity:** Warning

**Alert Category:** System - Other

**Serviceable:** Yes

**CIM Information:** **Prefix:** PLAT and **ID:** 0142

**SNMP Trap ID:** 22

**Automatically notify Support:** No

**User response:**

1. Reseat the DIMM, and then restart the server.
2. Replace DIMM n. (n = DIMM number)

---

**806f090c-2006ffff [PhysicalMemoryElementName] on Subsystem [MemoryElementName] Throttled. (DIMM 6)**

**Explanation:** This message is for the use case when an implementation has detected Memory has been Throttled.

May also be shown as 806f090c2006ffff or 0x806f090c2006ffff

**Severity:** Warning

**Alert Category:** System - Other

**Serviceable:** Yes

**CIM Information:** **Prefix:** PLAT and **ID:** 0142

**SNMP Trap ID:** 22

**Automatically notify Support:** No

**User response:**

1. Reseat the DIMM, and then restart the server.
2. Replace DIMM n. (n = DIMM number)

---

**806f090c-2007ffff [PhysicalMemoryElementName] on Subsystem [MemoryElementName] Throttled. (DIMM 7)**

**Explanation:** This message is for the use case when an implementation has detected Memory has been Throttled.

May also be shown as 806f090c2007ffff or 0x806f090c2007ffff

**Severity:** Warning

**Alert Category:** System - Other

**Serviceable:** Yes

**CIM Information:** **Prefix:** PLAT and **ID:** 0142

**SNMP Trap ID:** 22

**Automatically notify Support:** No

**User response:**

1. Reseat the DIMM, and then restart the server.
2. Replace DIMM n. (n = DIMM number)

**806f090c-2008ffff [PhysicalMemoryElementName] on Subsystem [MemoryElementName] Throttled. (DIMM 8)**

**Explanation:** This message is for the use case when an implementation has detected Memory has been Throttled.

May also be shown as 806f090c2008ffff or 0x806f090c2008ffff

**Severity:** Warning

**Alert Category:** System - Other

**Serviceable:** Yes

**CIM Information:** **Prefix:** PLAT and **ID:** 0142

**SNMP Trap ID:** 22

**Automatically notify Support:** No

**User response:**

1. Reseat the DIMM, and then restart the server.
2. Replace DIMM n. (n = DIMM number)

---

**806f090c-2009ffff [PhysicalMemoryElementName] on Subsystem [MemoryElementName] Throttled. (DIMM 9)**

**Explanation:** This message is for the use case when an implementation has detected Memory has been Throttled.

May also be shown as 806f090c2009ffff or 0x806f090c2009ffff

**Severity:** Warning

**Alert Category:** System - Other

**Serviceable:** Yes

**CIM Information:** **Prefix:** PLAT and **ID:** 0142

**SNMP Trap ID:** 22

**Automatically notify Support:** No

**User response:**

1. Reseat the DIMM, and then restart the server.
2. Replace DIMM n. (n = DIMM number)

---

**806f090c-200affff [PhysicalMemoryElementName] on Subsystem [MemoryElementName] Throttled. (DIMM 10)**

**Explanation:** This message is for the use case when an implementation has detected Memory has been Throttled.

May also be shown as 806f090c200affff or 0x806f090c200affff

**Severity:** Warning

**Alert Category:** System - Other

**Serviceable:** Yes

**CIM Information:** **Prefix:** PLAT and **ID:** 0142

**SNMP Trap ID:** 22

**Automatically notify Support:** No

**User response:**

1. Reseat the DIMM, and then restart the server.
2. Replace DIMM n. (n = DIMM number)

**806f090c-200bffff [PhysicalMemoryElementName] on Subsystem [MemoryElementName] Throttled. (DIMM 11)**

**Explanation:** This message is for the use case when an implementation has detected Memory has been Throttled.

May also be shown as 806f090c200bffff or 0x806f090c200bffff

**Severity:** Warning

**Alert Category:** System - Other

**Serviceable:** Yes

**CIM Information:** **Prefix:** PLAT and **ID:** 0142

**SNMP Trap ID:** 22

**Automatically notify Support:** No

**User response:**

1. Reseat the DIMM, and then restart the server.
2. Replace DIMM n. (n = DIMM number)

---

**806f090c-200cffff [PhysicalMemoryElementName] on Subsystem [MemoryElementName] Throttled. (DIMM 12)**

**Explanation:** This message is for the use case when an implementation has detected Memory has been Throttled.

May also be shown as 806f090c200cffff or 0x806f090c200cffff

**Severity:** Warning

**Alert Category:** System - Other

**Serviceable:** Yes

**CIM Information:** **Prefix:** PLAT and **ID:** 0142

**SNMP Trap ID:** 22

**Automatically notify Support:** No

**User response:**

1. Reseat the DIMM, and then restart the server.
2. Replace DIMM n. (n = DIMM number)

---

**806f090c-200dffff [PhysicalMemoryElementName] on Subsystem [MemoryElementName] Throttled. (DIMM 13)**

**Explanation:** This message is for the use case when an implementation has detected Memory has been Throttled.

May also be shown as 806f090c200dffff or 0x806f090c200dffff

**Severity:** Warning

**Alert Category:** System - Other

**Serviceable:** Yes

**CIM Information:** **Prefix:** PLAT and **ID:** 0142

**SNMP Trap ID:** 22

**Automatically notify Support:** No

**User response:**

1. Reseat the DIMM, and then restart the server.
2. Replace DIMM n. (n = DIMM number)

**806f090c-200effff [PhysicalMemoryElementName] on Subsystem [MemoryElementName] Throttled. (DIMM 14)**

**Explanation:** This message is for the use case when an implementation has detected Memory has been Throttled.

May also be shown as 806f090c200effff or 0x806f090c200effff

**Severity:** Warning

**Alert Category:** System - Other

**Serviceable:** Yes

**CIM Information:** **Prefix:** PLAT and **ID:** 0142

**SNMP Trap ID:** 22

**Automatically notify Support:** No

**User response:**

1. Reseat the DIMM, and then restart the server.
2. Replace DIMM n. (n = DIMM number)

---

**806f090c-200fffff [PhysicalMemoryElementName] on Subsystem [MemoryElementName] Throttled. (DIMM 15)**

**Explanation:** This message is for the use case when an implementation has detected Memory has been Throttled.

May also be shown as 806f090c200fffff or 0x806f090c200fffff

**Severity:** Warning

**Alert Category:** System - Other

**Serviceable:** Yes

**CIM Information:** **Prefix:** PLAT and **ID:** 0142

**SNMP Trap ID:** 22

**Automatically notify Support:** No

**User response:**

1. Reseat the DIMM, and then restart the server.
2. Replace DIMM n. (n = DIMM number)

---

**806f090c-2010ffff [PhysicalMemoryElementName] on Subsystem [MemoryElementName] Throttled. (DIMM 16)**

**Explanation:** This message is for the use case when an implementation has detected Memory has been Throttled.

May also be shown as 806f090c2010ffff or 0x806f090c2010ffff

**Severity:** Warning

**Alert Category:** System - Other

**Serviceable:** Yes

**CIM Information:** **Prefix:** PLAT and **ID:** 0142

**SNMP Trap ID:** 22

**Automatically notify Support:** No

**User response:**

1. Reseat the DIMM, and then restart the server.
2. Replace DIMM n. (n = DIMM number)

**806f090c-2011ffff [PhysicalMemoryElementName] on Subsystem [MemoryElementName] Throttled. (DIMM 17)**

**Explanation:** This message is for the use case when an implementation has detected Memory has been Throttled.

May also be shown as 806f090c2011ffff or 0x806f090c2011ffff

**Severity:** Warning

**Alert Category:** System - Other

**Serviceable:** Yes

**CIM Information:** **Prefix:** PLAT and **ID:** 0142

**SNMP Trap ID:** 22

**Automatically notify Support:** No

**User response:**

1. Reseat the DIMM, and then restart the server.
2. Replace DIMM n. (n = DIMM number)

---

**806f090c-2012ffff [PhysicalMemoryElementName] on Subsystem [MemoryElementName] Throttled. (DIMM 18)**

**Explanation:** This message is for the use case when an implementation has detected Memory has been Throttled.

May also be shown as 806f090c2012ffff or 0x806f090c2012ffff

**Severity:** Warning

**Alert Category:** System - Other

**Serviceable:** Yes

**CIM Information:** **Prefix:** PLAT and **ID:** 0142

**SNMP Trap ID:** 22

**Automatically notify Support:** No

**User response:**

1. Reseat the DIMM, and then restart the server.
2. Replace DIMM n. (n = DIMM number)

---

**806f090c-2013ffff [PhysicalMemoryElementName] on Subsystem [MemoryElementName] Throttled. (DIMM 19)**

**Explanation:** This message is for the use case when an implementation has detected Memory has been Throttled.

May also be shown as 806f090c2013ffff or 0x806f090c2013ffff

**Severity:** Warning

**Alert Category:** System - Other

**Serviceable:** Yes

**CIM Information:** **Prefix:** PLAT and **ID:** 0142

**SNMP Trap ID:** 22

**Automatically notify Support:** No

**User response:**

1. Reseat the DIMM, and then restart the server.
2. Replace DIMM n. (n = DIMM number)

**806f090c-2014ffff [PhysicalMemoryElementName] on Subsystem [MemoryElementName] Throttled. (DIMM 20)**

**Explanation:** This message is for the use case when an implementation has detected Memory has been Throttled.

May also be shown as 806f090c2014ffff or 0x806f090c2014ffff

**Severity:** Warning

**Alert Category:** System - Other

**Serviceable:** Yes

**CIM Information:** **Prefix:** PLAT and **ID:** 0142

**SNMP Trap ID:** 22

**Automatically notify Support:** No

**User response:**

1. Reseat the DIMM, and then restart the server.
2. Replace DIMM n. (n = DIMM number)

---

**806f090c-2015ffff [PhysicalMemoryElementName] on Subsystem [MemoryElementName] Throttled. (DIMM 21)**

**Explanation:** This message is for the use case when an implementation has detected Memory has been Throttled.

May also be shown as 806f090c2015ffff or 0x806f090c2015ffff

**Severity:** Warning

**Alert Category:** System - Other

**Serviceable:** Yes

**CIM Information:** **Prefix:** PLAT and **ID:** 0142

**SNMP Trap ID:** 22

**Automatically notify Support:** No

**User response:**

1. Reseat the DIMM, and then restart the server.
2. Replace DIMM n. (n = DIMM number)

---

**806f090c-2016ffff [PhysicalMemoryElementName] on Subsystem [MemoryElementName] Throttled. (DIMM 22)**

**Explanation:** This message is for the use case when an implementation has detected Memory has been Throttled.

May also be shown as 806f090c2016ffff or 0x806f090c2016ffff

**Severity:** Warning

**Alert Category:** System - Other

**Serviceable:** Yes

**CIM Information:** **Prefix:** PLAT and **ID:** 0142

**SNMP Trap ID:** 22

**Automatically notify Support:** No

**User response:**

1. Reseat the DIMM, and then restart the server.
2. Replace DIMM n. (n = DIMM number)

**806f090c-2017ffff [PhysicalMemoryElementName] on Subsystem [MemoryElementName] Throttled. (DIMM 23)**

**Explanation:** This message is for the use case when an implementation has detected Memory has been Throttled.

May also be shown as 806f090c2017ffff or 0x806f090c2017ffff

**Severity:** Warning

**Alert Category:** System - Other

**Serviceable:** Yes

**CIM Information:** **Prefix:** PLAT and **ID:** 0142

**SNMP Trap ID:** 22

**Automatically notify Support:** No

**User response:**

1. Reseat the DIMM, and then restart the server.
2. Replace DIMM n. (n = DIMM number)

---

**806f090c-2018ffff [PhysicalMemoryElementName] on Subsystem [MemoryElementName] Throttled. (DIMM 24)**

**Explanation:** This message is for the use case when an implementation has detected Memory has been Throttled.

May also be shown as 806f090c2018ffff or 0x806f090c2018ffff

**Severity:** Warning

**Alert Category:** System - Other

**Serviceable:** Yes

**CIM Information:** **Prefix:** PLAT and **ID:** 0142

**SNMP Trap ID:** 22

**Automatically notify Support:** No

**User response:**

1. Reseat the DIMM, and then restart the server.
2. Replace DIMM n. (n = DIMM number)

---

**806f0a07-0301ffff [ProcessorElementName] is operating in a Degraded State. (CPU 1)**

**Explanation:** This message is for the use case when an implementation has detected a Processor is running in the Degraded state.

May also be shown as 806f0a070301ffff or 0x806f0a070301ffff

**Severity:** Warning

**Alert Category:** Warning - CPU

**Serviceable:** Yes

**CIM Information:** **Prefix:** PLAT and **ID:** 0038

**SNMP Trap ID:** 42

**Automatically notify Support:** No

**User response:**

1. Make sure that the fans are operating, that there are no obstructions to the airflow (front and rear of the server), that the air baffles are in place and correctly installed, and that the server cover is installed and completely closed.
2. Check the ambient temperature. You must be operating within the specifications.
3. Make sure that the heat sink for microprocessor n is installed correctly.
4. (Trained technician only) Replace microprocessor n. (n = microprocessor number)

**806f0a07-0302ffff [ProcessorElementName] is operating in a Degraded State. (CPU 2)**

**Explanation:** This message is for the use case when an implementation has detected a Processor is running in the Degraded state.

May also be shown as 806f0a070302ffff or 0x806f0a070302ffff

**Severity:** Warning

**Alert Category:** Warning - CPU

**Serviceable:** Yes

**CIM Information:** **Prefix:** PLAT and **ID:** 0038

**SNMP Trap ID:** 42

**Automatically notify Support:** No

**User response:**

1. Make sure that the fans are operating, that there are no obstructions to the airflow (front and rear of the server), that the air baffles are in place and correctly installed, and that the server cover is installed and completely closed.
2. Check the ambient temperature. You must be operating within the specifications.
3. Make sure that the heat sink for microprocessor n is installed correctly.
4. (Trained technician only) Replace microprocessor n. (n = microprocessor number)

**806f0a0c-2001ffff An Over-Temperature Condition has been detected on the [PhysicalMemoryElementName] on Subsystem [MemoryElementName]. (DIMM 1)**

**Explanation:** This message is for the use case when an implementation has detected an Over Temperature Condition for Memory that has been Detected.

May also be shown as 806f0a0c2001ffff or 0x806f0a0c2001ffff

**Severity:** Error

**Alert Category:** Critical - Temperature

**Serviceable:** Yes

**CIM Information:** **Prefix:** PLAT and **ID:** 0146

**SNMP Trap ID:** 0

**Automatically notify Support:** No

**User response:**

1. Make sure that the fans are operating, that there are no obstructions to the airflow, that the air baffles are in place and correctly installed, and that the server cover is installed and completely closed.
2. Make sure that ambient temperature is within the specifications.
3. If a fan has failed, complete the action for a fan failure.
4. Replace DIMM n. (n = DIMM number)

**806f0a0c-2002ffff An Over-Temperature Condition has been detected on the [PhysicalMemoryElementName] on Subsystem [MemoryElementName]. (DIMM 2)**

**Explanation:** This message is for the use case when an implementation has detected an Over Temperature Condition for Memory that has been Detected.

May also be shown as 806f0a0c2002ffff or 0x806f0a0c2002ffff

**Severity:** Error

**Alert Category:** Critical - Temperature

**Serviceable:** Yes

**CIM Information:** **Prefix:** PLAT and **ID:** 0146

**SNMP Trap ID:** 0

**Automatically notify Support:** No

**User response:**

1. Make sure that the fans are operating, that there are no obstructions to the airflow, that the air baffles are in place and correctly installed, and that the server cover is installed and completely closed.
2. Make sure that ambient temperature is within the specifications.
3. If a fan has failed, complete the action for a fan failure.
4. Replace DIMM n. (n = DIMM number)

**806f0a0c-2003ffff An Over-Temperature Condition has been detected on the [PhysicalMemoryElementName] on Subsystem [MemoryElementName]. (DIMM 3)**

**Explanation:** This message is for the use case when an implementation has detected an Over Temperature Condition for Memory that has been Detected.

May also be shown as 806f0a0c2003ffff or 0x806f0a0c2003ffff

**Severity:** Error

**Alert Category:** Critical - Temperature

**Serviceable:** Yes

**CIM Information:** **Prefix:** PLAT and **ID:** 0146

**SNMP Trap ID:** 0

**Automatically notify Support:** No

**User response:**

1. Make sure that the fans are operating, that there are no obstructions to the airflow, that the air baffles are in place and correctly installed, and that the server cover is installed and completely closed.
2. Make sure that ambient temperature is within the specifications.
3. If a fan has failed, complete the action for a fan failure.
4. Replace DIMM n. (n = DIMM number)

**806f0a0c-2004ffff An Over-Temperature Condition has been detected on the [PhysicalMemoryElementName] on Subsystem [MemoryElementName]. (DIMM 4)**

**Explanation:** This message is for the use case when an implementation has detected an Over Temperature Condition for Memory that has been Detected.

May also be shown as 806f0a0c2004ffff or 0x806f0a0c2004ffff

**Severity:** Error

**Alert Category:** Critical - Temperature

**Serviceable:** Yes

**CIM Information:** **Prefix:** PLAT and **ID:** 0146

**SNMP Trap ID:** 0

**Automatically notify Support:** No

**User response:**

1. Make sure that the fans are operating, that there are no obstructions to the airflow, that the air baffles are in place and correctly installed, and that the server cover is installed and completely closed.
2. Make sure that ambient temperature is within the specifications.
3. If a fan has failed, complete the action for a fan failure.
4. Replace DIMM n. (n = DIMM number)

**806f0a0c-2005ffff An Over-Temperature Condition has been detected on the [PhysicalMemoryElementName] on Subsystem [MemoryElementName]. (DIMM 5)**

**Explanation:** This message is for the use case when an implementation has detected an Over Temperature Condition for Memory that has been Detected.

May also be shown as 806f0a0c2005ffff or 0x806f0a0c2005ffff

**Severity:** Error

**Alert Category:** Critical - Temperature

**Serviceable:** Yes

**CIM Information:** **Prefix:** PLAT and **ID:** 0146

**SNMP Trap ID:** 0

**Automatically notify Support:** No

**User response:**

1. Make sure that the fans are operating, that there are no obstructions to the airflow, that the air baffles are in place and correctly installed, and that the server cover is installed and completely closed.
2. Make sure that ambient temperature is within the specifications.
3. If a fan has failed, complete the action for a fan failure.
4. Replace DIMM n. (n = DIMM number)

**806f0a0c-2006ffff An Over-Temperature Condition has been detected on the [PhysicalMemoryElementName] on Subsystem [MemoryElementName]. (DIMM 6)**

**Explanation:** This message is for the use case when an implementation has detected an Over Temperature Condition for Memory that has been Detected.

May also be shown as 806f0a0c2006ffff or 0x806f0a0c2006ffff

**Severity:** Error

**Alert Category:** Critical - Temperature

**Serviceable:** Yes

**CIM Information:** **Prefix:** PLAT and **ID:** 0146

**SNMP Trap ID:** 0

**Automatically notify Support:** No

**User response:**

1. Make sure that the fans are operating, that there are no obstructions to the airflow, that the air baffles are in place and correctly installed, and that the server cover is installed and completely closed.
2. Make sure that ambient temperature is within the specifications.
3. If a fan has failed, complete the action for a fan failure.
4. Replace DIMM n. (n = DIMM number)

**806f0a0c-2007ffff An Over-Temperature Condition has been detected on the [PhysicalMemoryElementName] on Subsystem [MemoryElementName]. (DIMM 7)**

**Explanation:** This message is for the use case when an implementation has detected an Over Temperature Condition for Memory that has been Detected.

May also be shown as 806f0a0c2007ffff or 0x806f0a0c2007ffff

**Severity:** Error

**Alert Category:** Critical - Temperature

**Serviceable:** Yes

**CIM Information:** **Prefix:** PLAT and **ID:** 0146

**SNMP Trap ID:** 0

**Automatically notify Support:** No

**User response:**

1. Make sure that the fans are operating, that there are no obstructions to the airflow, that the air baffles are in place and correctly installed, and that the server cover is installed and completely closed.
2. Make sure that ambient temperature is within the specifications.
3. If a fan has failed, complete the action for a fan failure.
4. Replace DIMM n. (n = DIMM number)

**806f0a0c-2008ffff An Over-Temperature Condition has been detected on the [PhysicalMemoryElementName] on Subsystem [MemoryElementName]. (DIMM 8)**

**Explanation:** This message is for the use case when an implementation has detected an Over Temperature Condition for Memory that has been Detected.

May also be shown as 806f0a0c2008ffff or 0x806f0a0c2008ffff

**Severity:** Error

**Alert Category:** Critical - Temperature

**Serviceable:** Yes

**CIM Information:** **Prefix:** PLAT and **ID:** 0146

**SNMP Trap ID:** 0

**Automatically notify Support:** No

**User response:**

1. Make sure that the fans are operating, that there are no obstructions to the airflow, that the air baffles are in place and correctly installed, and that the server cover is installed and completely closed.
2. Make sure that ambient temperature is within the specifications.
3. If a fan has failed, complete the action for a fan failure.
4. Replace DIMM n. (n = DIMM number)

**806f0a0c-2009ffff An Over-Temperature Condition has been detected on the [PhysicalMemoryElementName] on Subsystem [MemoryElementName]. (DIMM 9)**

**Explanation:** This message is for the use case when an implementation has detected an Over Temperature Condition for Memory that has been Detected.

May also be shown as 806f0a0c2009ffff or 0x806f0a0c2009ffff

**Severity:** Error

**Alert Category:** Critical - Temperature

**Serviceable:** Yes

**CIM Information:** **Prefix:** PLAT and **ID:** 0146

**SNMP Trap ID:** 0

**Automatically notify Support:** No

**User response:**

1. Make sure that the fans are operating, that there are no obstructions to the airflow, that the air baffles are in place and correctly installed, and that the server cover is installed and completely closed.
2. Make sure that ambient temperature is within the specifications.
3. If a fan has failed, complete the action for a fan failure.
4. Replace DIMM n. (n = DIMM number)

**806f0a0c-200affff An Over-Temperature Condition has been detected on the [PhysicalMemoryElementName] on Subsystem [MemoryElementName]. (DIMM 10)**

**Explanation:** This message is for the use case when an implementation has detected an Over Temperature Condition for Memory that has been Detected.

May also be shown as 806f0a0c200affff or 0x806f0a0c200affff

**Severity:** Error

**Alert Category:** Critical - Temperature

**Serviceable:** Yes

**CIM Information:** **Prefix:** PLAT and **ID:** 0146

**SNMP Trap ID:** 0

**Automatically notify Support:** No

**User response:**

1. Make sure that the fans are operating, that there are no obstructions to the airflow, that the air baffles are in place and correctly installed, and that the server cover is installed and completely closed.
2. Make sure that ambient temperature is within the specifications.
3. If a fan has failed, complete the action for a fan failure.
4. Replace DIMM n. (n = DIMM number)

**806f0a0c-200bffff An Over-Temperature Condition has been detected on the [PhysicalMemoryElementName] on Subsystem [MemoryElementName]. (DIMM 11)**

**Explanation:** This message is for the use case when an implementation has detected an Over Temperature Condition for Memory that has been Detected.

May also be shown as 806f0a0c200bffff or 0x806f0a0c200bffff

**Severity:** Error

**Alert Category:** Critical - Temperature

**Serviceable:** Yes

**CIM Information:** **Prefix:** PLAT and **ID:** 0146

**SNMP Trap ID:** 0

**Automatically notify Support:** No

**User response:**

1. Make sure that the fans are operating, that there are no obstructions to the airflow, that the air baffles are in place and correctly installed, and that the server cover is installed and completely closed.
2. Make sure that ambient temperature is within the specifications.
3. If a fan has failed, complete the action for a fan failure.
4. Replace DIMM n. (n = DIMM number)

**806f0a0c-200cffff An Over-Temperature Condition has been detected on the [PhysicalMemoryElementName] on Subsystem [MemoryElementName]. (DIMM 12)**

**Explanation:** This message is for the use case when an implementation has detected an Over Temperature Condition for Memory that has been Detected.

May also be shown as 806f0a0c200cffff or 0x806f0a0c200cffff

**Severity:** Error

**Alert Category:** Critical - Temperature

**Serviceable:** Yes

**CIM Information:** **Prefix:** PLAT and **ID:** 0146

**SNMP Trap ID:** 0

**Automatically notify Support:** No

**User response:**

1. Make sure that the fans are operating, that there are no obstructions to the airflow, that the air baffles are in place and correctly installed, and that the server cover is installed and completely closed.
2. Make sure that ambient temperature is within the specifications.
3. If a fan has failed, complete the action for a fan failure.
4. Replace DIMM n. (n = DIMM number)

---

**806f0a0c-200dffff An Over-Temperature Condition has been detected on the [PhysicalMemoryElementName] on Subsystem [MemoryElementName]. (DIMM 13)**

**Explanation:** This message is for the use case when an implementation has detected an Over Temperature Condition for Memory that has been Detected.

May also be shown as 806f0a0c200dffff or 0x806f0a0c200dffff

**Severity:** Error

**Alert Category:** Critical - Temperature

**Serviceable:** Yes

**CIM Information:** **Prefix:** PLAT and **ID:** 0146

**SNMP Trap ID:** 0

**Automatically notify Support:** No

**User response:**

1. Make sure that the fans are operating, that there are no obstructions to the airflow, that the air baffles are in place and correctly installed, and that the server cover is installed and completely closed.
2. Make sure that ambient temperature is within the specifications.
3. If a fan has failed, complete the action for a fan failure.
4. Replace DIMM n. (n = DIMM number)

**806f0a0c-200effff An Over-Temperature Condition has been detected on the [PhysicalMemoryElementName] on Subsystem [MemoryElementName]. (DIMM 14)**

**Explanation:** This message is for the use case when an implementation has detected an Over Temperature Condition for Memory that has been Detected.

May also be shown as 806f0a0c200effff or 0x806f0a0c200effff

**Severity:** Error

**Alert Category:** Critical - Temperature

**Serviceable:** Yes

**CIM Information:** **Prefix:** PLAT and **ID:** 0146

**SNMP Trap ID:** 0

**Automatically notify Support:** No

**User response:**

1. Make sure that the fans are operating, that there are no obstructions to the airflow, that the air baffles are in place and correctly installed, and that the server cover is installed and completely closed.
2. Make sure that ambient temperature is within the specifications.
3. If a fan has failed, complete the action for a fan failure.
4. Replace DIMM n. (n = DIMM number)

**806f0a0c-200fffff An Over-Temperature Condition has been detected on the [PhysicalMemoryElementName] on Subsystem [MemoryElementName]. (DIMM 15)**

**Explanation:** This message is for the use case when an implementation has detected an Over Temperature Condition for Memory that has been Detected.

May also be shown as 806f0a0c200fffff or 0x806f0a0c200fffff

**Severity:** Error

**Alert Category:** Critical - Temperature

**Serviceable:** Yes

**CIM Information:** **Prefix:** PLAT and **ID:** 0146

**SNMP Trap ID:** 0

**Automatically notify Support:** No

**User response:**

1. Make sure that the fans are operating, that there are no obstructions to the airflow, that the air baffles are in place and correctly installed, and that the server cover is installed and completely closed.
2. Make sure that ambient temperature is within the specifications.
3. If a fan has failed, complete the action for a fan failure.
4. Replace DIMM n. (n = DIMM number)

**806f0a0c-2010ffff An Over-Temperature Condition has been detected on the [PhysicalMemoryElementName] on Subsystem [MemoryElementName]. (DIMM 16)**

**Explanation:** This message is for the use case when an implementation has detected an Over Temperature Condition for Memory that has been Detected.

May also be shown as 806f0a0c2010ffff or 0x806f0a0c2010ffff

**Severity:** Error

**Alert Category:** Critical - Temperature

**Serviceable:** Yes

**CIM Information:** **Prefix:** PLAT and **ID:** 0146

**SNMP Trap ID:** 0

**Automatically notify Support:** No

**User response:**

1. Make sure that the fans are operating, that there are no obstructions to the airflow, that the air baffles are in place and correctly installed, and that the server cover is installed and completely closed.
2. Make sure that ambient temperature is within the specifications.
3. If a fan has failed, complete the action for a fan failure.
4. Replace DIMM n. (n = DIMM number)

**806f0a0c-2011ffff An Over-Temperature Condition has been detected on the [PhysicalMemoryElementName] on Subsystem [MemoryElementName]. (DIMM 17)**

**Explanation:** This message is for the use case when an implementation has detected an Over Temperature Condition for Memory that has been Detected.

May also be shown as 806f0a0c2011ffff or 0x806f0a0c2011ffff

**Severity:** Error

**Alert Category:** Critical - Temperature

**Serviceable:** Yes

**CIM Information:** **Prefix:** PLAT and **ID:** 0146

**SNMP Trap ID:** 0

**Automatically notify Support:** No

**User response:**

1. Make sure that the fans are operating, that there are no obstructions to the airflow, that the air baffles are in place and correctly installed, and that the server cover is installed and completely closed.
2. Make sure that ambient temperature is within the specifications.
3. If a fan has failed, complete the action for a fan failure.
4. Replace DIMM n. (n = DIMM number)

**806f0a0c-2012ffff An Over-Temperature Condition has been detected on the [PhysicalMemoryElementName] on Subsystem [MemoryElementName]. (DIMM 18)**

**Explanation:** This message is for the use case when an implementation has detected an Over Temperature Condition for Memory that has been Detected.

May also be shown as 806f0a0c2012ffff or 0x806f0a0c2012ffff

**Severity:** Error

**Alert Category:** Critical - Temperature

**Serviceable:** Yes

**CIM Information:** **Prefix:** PLAT and **ID:** 0146

**SNMP Trap ID:** 0

**Automatically notify Support:** No

**User response:**

1. Make sure that the fans are operating, that there are no obstructions to the airflow, that the air baffles are in place and correctly installed, and that the server cover is installed and completely closed.
2. Make sure that ambient temperature is within the specifications.
3. If a fan has failed, complete the action for a fan failure.
4. Replace DIMM n. (n = DIMM number)

**806f0a0c-2013ffff An Over-Temperature Condition has been detected on the [PhysicalMemoryElementName] on Subsystem [MemoryElementName]. (DIMM 19)**

**Explanation:** This message is for the use case when an implementation has detected an Over Temperature Condition for Memory that has been Detected.

May also be shown as 806f0a0c2013ffff or 0x806f0a0c2013ffff

**Severity:** Error

**Alert Category:** Critical - Temperature

**Serviceable:** Yes

**CIM Information:** **Prefix:** PLAT and **ID:** 0146

**SNMP Trap ID:** 0

**Automatically notify Support:** No

**User response:**

1. Make sure that the fans are operating, that there are no obstructions to the airflow, that the air baffles are in place and correctly installed, and that the server cover is installed and completely closed.
2. Make sure that ambient temperature is within the specifications.
3. If a fan has failed, complete the action for a fan failure.
4. Replace DIMM n. (n = DIMM number)

**806f0a0c-2014ffff An Over-Temperature Condition has been detected on the [PhysicalMemoryElementName] on Subsystem [MemoryElementName]. (DIMM 20)**

**Explanation:** This message is for the use case when an implementation has detected an Over Temperature Condition for Memory that has been Detected.

May also be shown as 806f0a0c2014ffff or 0x806f0a0c2014ffff

**Severity:** Error

**Alert Category:** Critical - Temperature

**Serviceable:** Yes

**CIM Information:** **Prefix:** PLAT and **ID:** 0146

**SNMP Trap ID:** 0

**Automatically notify Support:** No

**User response:**

1. Make sure that the fans are operating, that there are no obstructions to the airflow, that the air baffles are in place and correctly installed, and that the server cover is installed and completely closed.
2. Make sure that ambient temperature is within the specifications.
3. If a fan has failed, complete the action for a fan failure.
4. Replace DIMM n. (n = DIMM number)

**806f0a0c-2015ffff An Over-Temperature Condition has been detected on the [PhysicalMemoryElementName] on Subsystem [MemoryElementName]. (DIMM 21)**

**Explanation:** This message is for the use case when an implementation has detected an Over Temperature Condition for Memory that has been Detected.

May also be shown as 806f0a0c2015ffff or 0x806f0a0c2015ffff

**Severity:** Error

**Alert Category:** Critical - Temperature

**Serviceable:** Yes

**CIM Information:** **Prefix:** PLAT and **ID:** 0146

**SNMP Trap ID:** 0

**Automatically notify Support:** No

**User response:**

1. Make sure that the fans are operating, that there are no obstructions to the airflow, that the air baffles are in place and correctly installed, and that the server cover is installed and completely closed.
2. Make sure that ambient temperature is within the specifications.
3. If a fan has failed, complete the action for a fan failure.
4. Replace DIMM n. (n = DIMM number)

**806f0a0c-2016ffff An Over-Temperature Condition has been detected on the [PhysicalMemoryElementName] on Subsystem [MemoryElementName]. (DIMM 22)**

**Explanation:** This message is for the use case when an implementation has detected an Over Temperature Condition for Memory that has been Detected.

May also be shown as 806f0a0c2016ffff or 0x806f0a0c2016ffff

**Severity:** Error

**Alert Category:** Critical - Temperature

**Serviceable:** Yes

**CIM Information:** **Prefix:** PLAT and **ID:** 0146

**SNMP Trap ID:** 0

**Automatically notify Support:** No

**User response:**

1. Make sure that the fans are operating, that there are no obstructions to the airflow, that the air baffles are in place and correctly installed, and that the server cover is installed and completely closed.
2. Make sure that ambient temperature is within the specifications.
3. If a fan has failed, complete the action for a fan failure.
4. Replace DIMM n. (n = DIMM number)

**806f0a0c-2017ffff An Over-Temperature Condition has been detected on the [PhysicalMemoryElementName] on Subsystem [MemoryElementName]. (DIMM 23)**

**Explanation:** This message is for the use case when an implementation has detected an Over Temperature Condition for Memory that has been Detected.

May also be shown as 806f0a0c2017ffff or 0x806f0a0c2017ffff

**Severity:** Error

**Alert Category:** Critical - Temperature

**Serviceable:** Yes

**CIM Information:** **Prefix:** PLAT and **ID:** 0146

**SNMP Trap ID:** 0

**Automatically notify Support:** No

**User response:**

1. Make sure that the fans are operating, that there are no obstructions to the airflow, that the air baffles are in place and correctly installed, and that the server cover is installed and completely closed.
2. Make sure that ambient temperature is within the specifications.
3. If a fan has failed, complete the action for a fan failure.
4. Replace DIMM n. (n = DIMM number)

**806f0a0c-2018ffff An Over-Temperature Condition has been detected on the [PhysicalMemoryElementName] on Subsystem [MemoryElementName]. (DIMM 24)**

**Explanation:** This message is for the use case when an implementation has detected an Over Temperature Condition for Memory that has been Detected.

May also be shown as 806f0a0c2018ffff or 0x806f0a0c2018ffff

**Severity:** Error

**Alert Category:** Critical - Temperature

**Serviceable:** Yes

**CIM Information:** **Prefix:** PLAT and **ID:** 0146

**SNMP Trap ID:** 0

**Automatically notify Support:** No

**User response:**

1. Make sure that the fans are operating, that there are no obstructions to the airflow, that the air baffles are in place and correctly installed, and that the server cover is installed and completely closed.
2. Make sure that ambient temperature is within the specifications.
3. If a fan has failed, complete the action for a fan failure.
4. Replace DIMM n. (n = DIMM number)

**806f0a13-0301ffff A Fatal Bus Error has occurred on system [ComputerSystemElementName]. (CPU 1 PECI)**

**Explanation:** This message is for the use case when an implementation has detected a Bus Fatal Error.

May also be shown as 806f0a130301ffff or 0x806f0a130301ffff

**Severity:** Error

**Alert Category:** Critical - Other

**Serviceable:** Yes

**CIM Information:** **Prefix:** PLAT and **ID:** 0244

**SNMP Trap ID:** 50

**Automatically notify Support:** No

**User response:**

1. Reseat the microprocessor, and then restart the server.
2. Replace microprocessor n. (n = microprocessor number)

**806f0a13-0302ffff A Fatal Bus Error has occurred on system [ComputerSystemElementName]. (CPU 2 PECI)**

**Explanation:** This message is for the use case when an implementation has detected a Bus Fatal Error.

May also be shown as 806f0a130302ffff or 0x806f0a130302ffff

**Severity:** Error

**Alert Category:** Critical - Other

**Serviceable:** Yes

**CIM Information:** **Prefix:** PLAT and **ID:** 0244

**SNMP Trap ID:** 50

**Automatically notify Support:** No

**User response:**

1. Reseat the microprocessor, and then restart the server.
2. Replace microprocessor n. (n = microprocessor number)

---

**81010002-0701ffff Numeric sensor [NumericSensorElementName] going low (lower non-critical) has deasserted. (CMOS Battery)**

**Explanation:** This message is for the use case when an implementation has detected a Lower Non-critical sensor going low has deasserted.

May also be shown as 810100020701ffff or 0x810100020701ffff

**Severity:** Info

**Alert Category:** Warning - Voltage

**Serviceable:** No

**CIM Information:** **Prefix:** PLAT and **ID:** 0477

**SNMP Trap ID:** 13

**Automatically notify Support:** No

**User response:** No action; information only.

---

**81010202-0701ffff Numeric sensor [NumericSensorElementName] going low (lower critical) has deasserted. (CMOS Battery)**

**Explanation:** This message is for the use case when an implementation has detected a Lower Critical sensor going low has deasserted.

May also be shown as 810102020701ffff or 0x810102020701ffff

**Severity:** Info

**Alert Category:** Critical - Voltage

**Serviceable:** No

**CIM Information:** **Prefix:** PLAT and **ID:** 0481

**SNMP Trap ID:** 1

**Automatically notify Support:** No

**User response:** If the specified sensor is one of the following, SysBrd 3.3V, SysBrd 5V or SysBrd 12V: No action; information only.

**81010204-1d01ffff Numeric sensor [NumericSensorElementName] going low (lower critical) has deasserted. (Fan 1A/1B Tach)**

**Explanation:** This message is for the use case when an implementation has detected a Lower Critical sensor going low has deasserted.

May also be shown as 810102041d01ffff or 0x810102041d01ffff

**Severity:** Info

**Alert Category:** Critical - Fan Failure

**Serviceable:** No

**CIM Information:** **Prefix:** PLAT and **ID:** 0481

**SNMP Trap ID:** 11

**Automatically notify Support:** No

**User response:** No action; information only.

---

**81010204-1d02ffff Numeric sensor [NumericSensorElementName] going low (lower critical) has deasserted. (Fan 2A/2B Tach)**

**Explanation:** This message is for the use case when an implementation has detected a Lower Critical sensor going low has deasserted.

May also be shown as 810102041d02ffff or 0x810102041d02ffff

**Severity:** Info

**Alert Category:** Critical - Fan Failure

**Serviceable:** No

**CIM Information:** **Prefix:** PLAT and **ID:** 0481

**SNMP Trap ID:** 11

**Automatically notify Support:** No

**User response:** No action; information only.

---

**81010204-1d03ffff Numeric sensor [NumericSensorElementName] going low (lower critical) has deasserted. (Fan 3A/3B Tach)**

**Explanation:** This message is for the use case when an implementation has detected a Lower Critical sensor going low has deasserted.

May also be shown as 810102041d03ffff or 0x810102041d03ffff

**Severity:** Info

**Alert Category:** Critical - Fan Failure

**Serviceable:** No

**CIM Information:** **Prefix:** PLAT and **ID:** 0481

**SNMP Trap ID:** 11

**Automatically notify Support:** No

**User response:** No action; information only.

**81010204-1d04ffff Numeric sensor [NumericSensorElementName] going low (lower critical) has deasserted. (Fan 4A/4B Tach)**

**Explanation:** This message is for the use case when an implementation has detected a Lower Critical sensor going low has deasserted.

May also be shown as 810102041d04ffff or 0x810102041d04ffff

**Severity:** Info

**Alert Category:** Critical - Fan Failure

**Serviceable:** No

**CIM Information:** **Prefix:** PLAT and **ID:** 0481

**SNMP Trap ID:** 11

**Automatically notify Support:** No

**User response:** No action; information only.

---

**81010204-1d05ffff Numeric sensor [NumericSensorElementName] going low (lower critical) has deasserted. (Fan 5A/5B Tach)**

**Explanation:** This message is for the use case when an implementation has detected a Lower Critical sensor going low has deasserted.

May also be shown as 810102041d05ffff or 0x810102041d05ffff

**Severity:** Info

**Alert Category:** Critical - Fan Failure

**Serviceable:** No

**CIM Information:** **Prefix:** PLAT and **ID:** 0481

**SNMP Trap ID:** 11

**Automatically notify Support:** No

**User response:** No action; information only.

---

**81010204-1d06ffff Numeric sensor [NumericSensorElementName] going low (lower critical) has deasserted. (Fan 6A/6B Tach)**

**Explanation:** This message is for the use case when an implementation has detected a Lower Critical sensor going low has deasserted.

May also be shown as 810102041d06ffff or 0x810102041d06ffff

**Severity:** Info

**Alert Category:** Critical - Fan Failure

**Serviceable:** No

**CIM Information:** **Prefix:** PLAT and **ID:** 0481

**SNMP Trap ID:** 11

**Automatically notify Support:** No

**User response:** No action; information only.

**81010204-1d07ffff Numeric sensor [NumericSensorElementName] going low (lower critical) has deasserted. (Fan Riser1A Tach)**

**Explanation:** This message is for the use case when an implementation has detected a Lower Critical sensor going low has deasserted.

May also be shown as 810102041d07ffff or 0x810102041d07ffff

**Severity:** Info

**Alert Category:** Critical - Fan Failure

**Serviceable:** No

**CIM Information:** **Prefix:** PLAT and **ID:** 0481

**SNMP Trap ID:** 11

**Automatically notify Support:** No

**User response:** No action; information only.

---

**81010204-1d08ffff Numeric sensor [NumericSensorElementName] going low (lower critical) has deasserted. (Fan Riser1B Tach)**

**Explanation:** This message is for the use case when an implementation has detected a Lower Critical sensor going low has deasserted.

May also be shown as 810102041d08ffff or 0x810102041d08ffff

**Severity:** Info

**Alert Category:** Critical - Fan Failure

**Serviceable:** No

**CIM Information:** **Prefix:** PLAT and **ID:** 0481

**SNMP Trap ID:** 11

**Automatically notify Support:** No

**User response:** No action; information only.

---

**81010204-1d09ffff Numeric sensor [NumericSensorElementName] going low (lower critical) has deasserted. (Fan Riser2A Tach)**

**Explanation:** This message is for the use case when an implementation has detected a Lower Critical sensor going low has deasserted.

May also be shown as 810102041d09ffff or 0x810102041d09ffff

**Severity:** Info

**Alert Category:** Critical - Fan Failure

**Serviceable:** No

**CIM Information:** **Prefix:** PLAT and **ID:** 0481

**SNMP Trap ID:** 11

**Automatically notify Support:** No

**User response:** No action; information only.

**81010204-1d0affff Numeric sensor [NumericSensorElementName] going low (lower critical) has deasserted. (Fan Riser2B Tach)**

**Explanation:** This message is for the use case when an implementation has detected a Lower Critical sensor going low has deasserted.

May also be shown as 810102041d0affff or 0x810102041d0affff

**Severity:** Info

**Alert Category:** Critical - Fan Failure

**Serviceable:** No

**CIM Information:** **Prefix:** PLAT and **ID:** 0481

**SNMP Trap ID:** 11

**Automatically notify Support:** No

**User response:** No action; information only.

---

**81010701-0701ffff Numeric sensor [NumericSensorElementName] going high (upper non-critical) has deasserted. (RS1 RR Amb Temp)**

**Explanation:** This message is for the use case when an implementation has detected an Upper Non-critical sensor going high has deasserted.

May also be shown as 810107010701ffff or 0x810107010701ffff

**Severity:** Info

**Alert Category:** Warning - Temperature

**Serviceable:** No

**CIM Information:** **Prefix:** PLAT and **ID:** 0491

**SNMP Trap ID:** 12

**Automatically notify Support:** No

**User response:** No action; information only.

---

**81010701-0702ffff Numeric sensor [NumericSensorElementName] going high (upper non-critical) has deasserted. (RS2 RR Amb Temp)**

**Explanation:** This message is for the use case when an implementation has detected an Upper Non-critical sensor going high has deasserted.

May also be shown as 810107010702ffff or 0x810107010702ffff

**Severity:** Info

**Alert Category:** Warning - Temperature

**Serviceable:** No

**CIM Information:** **Prefix:** PLAT and **ID:** 0491

**SNMP Trap ID:** 12

**Automatically notify Support:** No

**User response:** No action; information only.

**81010701-0703ffff Numeric sensor [NumericSensorElementName] going high (upper non-critical) has deasserted. (MID1 RR Amb Temp)**

**Explanation:** This message is for the use case when an implementation has detected an Upper Non-critical sensor going high has deasserted.

May also be shown as 810107010703ffff or 0x810107010703ffff

**Severity:** Info

**Alert Category:** Warning - Temperature

**Serviceable:** No

**CIM Information:** **Prefix:** PLAT and **ID:** 0491

**SNMP Trap ID:** 12

**Automatically notify Support:** No

**User response:** No action; information only.

---

**81010701-0704ffff Numeric sensor [NumericSensorElementName] going high (upper non-critical) has deasserted. (MID2 RR Amb Temp)**

**Explanation:** This message is for the use case when an implementation has detected an Upper Non-critical sensor going high has deasserted.

May also be shown as 810107010704ffff or 0x810107010704ffff

**Severity:** Info

**Alert Category:** Warning - Temperature

**Serviceable:** No

**CIM Information:** **Prefix:** PLAT and **ID:** 0491

**SNMP Trap ID:** 12

**Automatically notify Support:** No

**User response:** No action; information only.

---

**81010701-0705ffff Numeric sensor [NumericSensorElementName] going high (upper non-critical) has deasserted. (RAID RR Amb Temp)**

**Explanation:** This message is for the use case when an implementation has detected an Upper Non-critical sensor going high has deasserted.

May also be shown as 810107010705ffff or 0x810107010705ffff

**Severity:** Info

**Alert Category:** Warning - Temperature

**Serviceable:** No

**CIM Information:** **Prefix:** PLAT and **ID:** 0491

**SNMP Trap ID:** 12

**Automatically notify Support:** No

**User response:** No action; information only.

**81010701-0706ffff Numeric sensor [NumericSensorElementName] going high (upper non-critical) has deasserted. (PSU FR Amb Temp)**

**Explanation:** This message is for the use case when an implementation has detected an Upper Non-critical sensor going high has deasserted.

May also be shown as 810107010706ffff or 0x810107010706ffff

**Severity:** Info

**Alert Category:** Warning - Temperature

**Serviceable:** No

**CIM Information:** **Prefix:** PLAT and **ID:** 0491

**SNMP Trap ID:** 12

**Automatically notify Support:** No

**User response:** No action; information only.

---

**81010701-0707ffff Numeric sensor [NumericSensorElementName] going high (upper non-critical) has deasserted. (Rear BP1 Temp)**

**Explanation:** This message is for the use case when an implementation has detected an Upper Non-critical sensor going high has deasserted.

May also be shown as 810107010707ffff or 0x810107010707ffff

**Severity:** Info

**Alert Category:** Warning - Temperature

**Serviceable:** No

**CIM Information:** **Prefix:** PLAT and **ID:** 0491

**SNMP Trap ID:** 12

**Automatically notify Support:** No

**User response:** No action; information only.

---

**81010701-0708ffff Numeric sensor [NumericSensorElementName] going high (upper non-critical) has deasserted. (Rear BP2 Temp)**

**Explanation:** This message is for the use case when an implementation has detected an Upper Non-critical sensor going high has deasserted.

May also be shown as 810107010708ffff or 0x810107010708ffff

**Severity:** Info

**Alert Category:** Warning - Temperature

**Serviceable:** No

**CIM Information:** **Prefix:** PLAT and **ID:** 0491

**SNMP Trap ID:** 12

**Automatically notify Support:** No

**User response:** No action; information only.

**81010701-1401ffff Numeric sensor [NumericSensorElementName] going high (upper non-critical) has deasserted. (CPU1 VR Temp)**

**Explanation:** This message is for the use case when an implementation has detected an Upper Non-critical sensor going high has deasserted.

May also be shown as 810107011401ffff or 0x810107011401ffff

**Severity:** Info

**Alert Category:** Warning - Temperature

**Serviceable:** No

**CIM Information:** **Prefix:** PLAT and **ID:** 0491

**SNMP Trap ID:** 12

**Automatically notify Support:** No

**User response:** No action; information only.

---

**81010701-1402ffff Numeric sensor [NumericSensorElementName] going high (upper non-critical) has deasserted. (CPU2 VR Temp)**

**Explanation:** This message is for the use case when an implementation has detected an Upper Non-critical sensor going high has deasserted.

May also be shown as 810107011402ffff or 0x810107011402ffff

**Severity:** Info

**Alert Category:** Warning - Temperature

**Serviceable:** No

**CIM Information:** **Prefix:** PLAT and **ID:** 0491

**SNMP Trap ID:** 12

**Automatically notify Support:** No

**User response:** No action; information only.

---

**81010701-1403ffff Numeric sensor [NumericSensorElementName] going high (upper non-critical) has deasserted. (DIMM AB VR Temp)**

**Explanation:** This message is for the use case when an implementation has detected an Upper Non-critical sensor going high has deasserted.

May also be shown as 810107011403ffff or 0x810107011403ffff

**Severity:** Info

**Alert Category:** Warning - Temperature

**Serviceable:** No

**CIM Information:** **Prefix:** PLAT and **ID:** 0491

**SNMP Trap ID:** 12

**Automatically notify Support:** No

**User response:** No action; information only.

**81010701-1404ffff Numeric sensor [NumericSensorElementName] going high (upper non-critical) has deasserted. (DIMM CD VR Temp)**

**Explanation:** This message is for the use case when an implementation has detected an Upper Non-critical sensor going high has deasserted.

May also be shown as 810107011404ffff or 0x810107011404ffff

**Severity:** Info

**Alert Category:** Warning - Temperature

**Serviceable:** No

**CIM Information:** **Prefix:** PLAT and **ID:** 0491

**SNMP Trap ID:** 12

**Automatically notify Support:** No

**User response:** No action; information only.

---

**81010701-1405ffff Numeric sensor [NumericSensorElementName] going high (upper non-critical) has deasserted. (DIMM EF VR Temp)**

**Explanation:** This message is for the use case when an implementation has detected an Upper Non-critical sensor going high has deasserted.

May also be shown as 810107011405ffff or 0x810107011405ffff

**Severity:** Info

**Alert Category:** Warning - Temperature

**Serviceable:** No

**CIM Information:** **Prefix:** PLAT and **ID:** 0491

**SNMP Trap ID:** 12

**Automatically notify Support:** No

**User response:** No action; information only.

---

**81010701-1406ffff Numeric sensor [NumericSensorElementName] going high (upper non-critical) has deasserted. (DIMM GH VR Temp)**

**Explanation:** This message is for the use case when an implementation has detected an Upper Non-critical sensor going high has deasserted.

May also be shown as 810107011406ffff or 0x810107011406ffff

**Severity:** Info

**Alert Category:** Warning - Temperature

**Serviceable:** No

**CIM Information:** **Prefix:** PLAT and **ID:** 0491

**SNMP Trap ID:** 12

**Automatically notify Support:** No

**User response:** No action; information only.

**81010701-2d01ffff Numeric sensor [NumericSensorElementName] going high (upper non-critical) has deasserted. (PCH Temp)**

**Explanation:** This message is for the use case when an implementation has detected an Upper Non-critical sensor going high has deasserted.

May also be shown as 810107012d01ffff or 0x810107012d01ffff

**Severity:** Info

**Alert Category:** Warning - Temperature

**Serviceable:** No

**CIM Information:** **Prefix:** PLAT and **ID:** 0491

**SNMP Trap ID:** 12

**Automatically notify Support:** No

**User response:** No action; information only.

---

**81010701-3701ffff Numeric sensor [NumericSensorElementName] going high (upper non-critical) has deasserted. (Ambient Temp)**

**Explanation:** This message is for the use case when an implementation has detected an Upper Non-critical sensor going high has deasserted.

May also be shown as 810107013701ffff or 0x810107013701ffff

**Severity:** Info

**Alert Category:** Warning - Temperature

**Serviceable:** No

**CIM Information:** **Prefix:** PLAT and **ID:** 0491

**SNMP Trap ID:** 12

**Automatically notify Support:** No

**User response:** No action; information only.

---

**81010901-0701ffff Numeric sensor [NumericSensorElementName] going high (upper critical) has deasserted. (RS1 RR Amb Temp)**

**Explanation:** This message is for the use case when an implementation has detected an Upper Critical sensor going high has deasserted.

May also be shown as 810109010701ffff or 0x810109010701ffff

**Severity:** Info

**Alert Category:** Critical - Temperature

**Serviceable:** No

**CIM Information:** **Prefix:** PLAT and **ID:** 0495

**SNMP Trap ID:** 0

**Automatically notify Support:** No

**User response:** No action; information only.

**81010901-0702ffff Numeric sensor [NumericSensorElementName] going high (upper critical) has deasserted. (RS2 RR Amb Temp)**

**Explanation:** This message is for the use case when an implementation has detected an Upper Critical sensor going high has deasserted.

May also be shown as 810109010702ffff or 0x810109010702ffff

**Severity:** Info

**Alert Category:** Critical - Temperature

**Serviceable:** No

**CIM Information:** **Prefix:** PLAT and **ID:** 0495

**SNMP Trap ID:** 0

**Automatically notify Support:** No

**User response:** No action; information only.

---

**81010901-0703ffff Numeric sensor [NumericSensorElementName] going high (upper critical) has deasserted. (MID1 RR Amb Temp)**

**Explanation:** This message is for the use case when an implementation has detected an Upper Critical sensor going high has deasserted.

May also be shown as 810109010703ffff or 0x810109010703ffff

**Severity:** Info

**Alert Category:** Critical - Temperature

**Serviceable:** No

**CIM Information:** **Prefix:** PLAT and **ID:** 0495

**SNMP Trap ID:** 0

**Automatically notify Support:** No

**User response:** No action; information only.

---

**81010901-0704ffff Numeric sensor [NumericSensorElementName] going high (upper critical) has deasserted. (MID2 RR Amb Temp)**

**Explanation:** This message is for the use case when an implementation has detected an Upper Critical sensor going high has deasserted.

May also be shown as 810109010704ffff or 0x810109010704ffff

**Severity:** Info

**Alert Category:** Critical - Temperature

**Serviceable:** No

**CIM Information:** **Prefix:** PLAT and **ID:** 0495

**SNMP Trap ID:** 0

**Automatically notify Support:** No

**User response:** No action; information only.

**81010901-0705ffff Numeric sensor [NumericSensorElementName] going high (upper critical) has deasserted. (RAID RR Amb Temp)**

**Explanation:** This message is for the use case when an implementation has detected an Upper Critical sensor going high has deasserted.

May also be shown as 810109010705ffff or 0x810109010705ffff

**Severity:** Info

**Alert Category:** Critical - Temperature

**Serviceable:** No

**CIM Information:** **Prefix:** PLAT and **ID:** 0495

**SNMP Trap ID:** 0

**Automatically notify Support:** No

**User response:** No action; information only.

---

**81010901-0706ffff Numeric sensor [NumericSensorElementName] going high (upper critical) has deasserted. (PSU FR Amb Temp)**

**Explanation:** This message is for the use case when an implementation has detected an Upper Critical sensor going high has deasserted.

May also be shown as 810109010706ffff or 0x810109010706ffff

**Severity:** Info

**Alert Category:** Critical - Temperature

**Serviceable:** No

**CIM Information:** **Prefix:** PLAT and **ID:** 0495

**SNMP Trap ID:** 0

**Automatically notify Support:** No

**User response:** No action; information only.

---

**81010901-0707ffff Numeric sensor [NumericSensorElementName] going high (upper critical) has deasserted. (Rear BP1 Temp)**

**Explanation:** This message is for the use case when an implementation has detected an Upper Critical sensor going high has deasserted.

May also be shown as 810109010707ffff or 0x810109010707ffff

**Severity:** Info

**Alert Category:** Critical - Temperature

**Serviceable:** No

**CIM Information:** **Prefix:** PLAT and **ID:** 0495

**SNMP Trap ID:** 0

**Automatically notify Support:** No

**User response:** No action; information only.

**81010901-0708ffff Numeric sensor [NumericSensorElementName] going high (upper critical) has deasserted. (Rear BP2 Temp)**

**Explanation:** This message is for the use case when an implementation has detected an Upper Critical sensor going high has deasserted.

May also be shown as 810109010708ffff or 0x810109010708ffff

**Severity:** Info

**Alert Category:** Critical - Temperature

**Serviceable:** No

**CIM Information:** **Prefix:** PLAT and **ID:** 0495

**SNMP Trap ID:** 0

**Automatically notify Support:** No

**User response:** No action; information only.

---

**81010901-1401ffff Numeric sensor [NumericSensorElementName] going high (upper critical) has deasserted. (CPU1 VR Temp)**

**Explanation:** This message is for the use case when an implementation has detected an Upper Critical sensor going high has deasserted.

May also be shown as 810109011401ffff or 0x810109011401ffff

**Severity:** Info

**Alert Category:** Critical - Temperature

**Serviceable:** No

**CIM Information:** **Prefix:** PLAT and **ID:** 0495

**SNMP Trap ID:** 0

**Automatically notify Support:** No

**User response:** No action; information only.

---

**81010901-1402ffff Numeric sensor [NumericSensorElementName] going high (upper critical) has deasserted. (CPU2 VR Temp)**

**Explanation:** This message is for the use case when an implementation has detected an Upper Critical sensor going high has deasserted.

May also be shown as 810109011402ffff or 0x810109011402ffff

**Severity:** Info

**Alert Category:** Critical - Temperature

**Serviceable:** No

**CIM Information:** **Prefix:** PLAT and **ID:** 0495

**SNMP Trap ID:** 0

**Automatically notify Support:** No

**User response:** No action; information only.

**81010901-1403ffff Numeric sensor [NumericSensorElementName] going high (upper critical) has deasserted. (DIMM AB VR Temp)**

**Explanation:** This message is for the use case when an implementation has detected an Upper Critical sensor going high has deasserted.

May also be shown as 810109011403ffff or 0x810109011403ffff

**Severity:** Info

**Alert Category:** Critical - Temperature

**Serviceable:** No

**CIM Information:** **Prefix:** PLAT and **ID:** 0495

**SNMP Trap ID:** 0

**Automatically notify Support:** No

**User response:** No action; information only.

---

**81010901-1404ffff Numeric sensor [NumericSensorElementName] going high (upper critical) has deasserted. (DIMM CD VR Temp)**

**Explanation:** This message is for the use case when an implementation has detected an Upper Critical sensor going high has deasserted.

May also be shown as 810109011404ffff or 0x810109011404ffff

**Severity:** Info

**Alert Category:** Critical - Temperature

**Serviceable:** No

**CIM Information:** **Prefix:** PLAT and **ID:** 0495

**SNMP Trap ID:** 0

**Automatically notify Support:** No

**User response:** No action; information only.

---

**81010901-1405ffff Numeric sensor [NumericSensorElementName] going high (upper critical) has deasserted. (DIMM EF VR Temp)**

**Explanation:** This message is for the use case when an implementation has detected an Upper Critical sensor going high has deasserted.

May also be shown as 810109011405ffff or 0x810109011405ffff

**Severity:** Info

**Alert Category:** Critical - Temperature

**Serviceable:** No

**CIM Information:** **Prefix:** PLAT and **ID:** 0495

**SNMP Trap ID:** 0

**Automatically notify Support:** No

**User response:** No action; information only.

**81010901-1406ffff Numeric sensor [NumericSensorElementName] going high (upper critical) has deasserted. (DIMM GH VR Temp)**

**Explanation:** This message is for the use case when an implementation has detected an Upper Critical sensor going high has deasserted.

May also be shown as 810109011406ffff or 0x810109011406ffff

**Severity:** Info

**Alert Category:** Critical - Temperature

**Serviceable:** No

**CIM Information:** **Prefix:** PLAT and **ID:** 0495

**SNMP Trap ID:** 0

**Automatically notify Support:** No

**User response:** No action; information only.

---

**81010901-2d01ffff Numeric sensor [NumericSensorElementName] going high (upper critical) has deasserted. (PCH Temp)**

**Explanation:** This message is for the use case when an implementation has detected an Upper Critical sensor going high has deasserted.

May also be shown as 810109012d01ffff or 0x810109012d01ffff

**Severity:** Info

**Alert Category:** Critical - Temperature

**Serviceable:** No

**CIM Information:** **Prefix:** PLAT and **ID:** 0495

**SNMP Trap ID:** 0

**Automatically notify Support:** No

**User response:** No action; information only.

---

**81010901-3701ffff Numeric sensor [NumericSensorElementName] going high (upper critical) has deasserted. (Ambient Temp)**

**Explanation:** This message is for the use case when an implementation has detected an Upper Critical sensor going high has deasserted.

May also be shown as 810109013701ffff or 0x810109013701ffff

**Severity:** Info

**Alert Category:** Critical - Temperature

**Serviceable:** No

**CIM Information:** **Prefix:** PLAT and **ID:** 0495

**SNMP Trap ID:** 0

**Automatically notify Support:** No

**User response:** No action; information only.

**81010902-0701ffff Numeric sensor [NumericSensorElementName] going high (upper critical) has deasserted. (SysBrd 12V)**

**Explanation:** This message is for the use case when an implementation has detected an Upper Critical sensor going high has deasserted.

May also be shown as 810109020701ffff or 0x810109020701ffff

**Severity:** Info

**Alert Category:** Critical - Voltage

**Serviceable:** No

**CIM Information:** **Prefix:** PLAT and **ID:** 0495

**SNMP Trap ID:** 1

**Automatically notify Support:** No

**User response:** No action; information only. SysBrd 3.3V : SysBrd 5V :

---

**81010b01-0701ffff Numeric sensor [NumericSensorElementName] going high (upper non-recoverable) has deasserted. (RS1 RR Amb Temp)**

**Explanation:** This message is for the use case when an implementation has detected an Upper Non-recoverable sensor going high has deasserted.

May also be shown as 81010b010701ffff or 0x81010b010701ffff

**Severity:** Info

**Alert Category:** Critical - Temperature

**Serviceable:** No

**CIM Information:** **Prefix:** PLAT and **ID:** 0499

**SNMP Trap ID:** 0

**Automatically notify Support:** No

**User response:** No action; information only.

---

**81010b01-0702ffff Numeric sensor [NumericSensorElementName] going high (upper non-recoverable) has deasserted. (RS2 RR Amb Temp)**

**Explanation:** This message is for the use case when an implementation has detected an Upper Non-recoverable sensor going high has deasserted.

May also be shown as 81010b010702ffff or 0x81010b010702ffff

**Severity:** Info

**Alert Category:** Critical - Temperature

**Serviceable:** No

**CIM Information:** **Prefix:** PLAT and **ID:** 0499

**SNMP Trap ID:** 0

**Automatically notify Support:** No

**User response:** No action; information only.

**81010b01-0703ffff Numeric sensor [NumericSensorElementName] going high (upper non-recoverable) has deasserted. (MID1 RR Amb Temp)**

**Explanation:** This message is for the use case when an implementation has detected an Upper Non-recoverable sensor going high has deasserted.

May also be shown as 81010b010703ffff or 0x81010b010703ffff

**Severity:** Info

**Alert Category:** Critical - Temperature

**Serviceable:** No

**CIM Information:** **Prefix:** PLAT and **ID:** 0499

**SNMP Trap ID:** 0

**Automatically notify Support:** No

**User response:** No action; information only.

---

**81010b01-0704ffff Numeric sensor [NumericSensorElementName] going high (upper non-recoverable) has deasserted. (MID2 RR Amb Temp)**

**Explanation:** This message is for the use case when an implementation has detected an Upper Non-recoverable sensor going high has deasserted.

May also be shown as 81010b010704ffff or 0x81010b010704ffff

**Severity:** Info

**Alert Category:** Critical - Temperature

**Serviceable:** No

**CIM Information:** **Prefix:** PLAT and **ID:** 0499

**SNMP Trap ID:** 0

**Automatically notify Support:** No

**User response:** No action; information only.

---

**81010b01-0705ffff Numeric sensor [NumericSensorElementName] going high (upper non-recoverable) has deasserted. (RAID RR Amb Temp)**

**Explanation:** This message is for the use case when an implementation has detected an Upper Non-recoverable sensor going high has deasserted.

May also be shown as 81010b010705ffff or 0x81010b010705ffff

**Severity:** Info

**Alert Category:** Critical - Temperature

**Serviceable:** No

**CIM Information:** **Prefix:** PLAT and **ID:** 0499

**SNMP Trap ID:** 0

**Automatically notify Support:** No

**User response:** No action; information only.

**81010b01-0706ffff Numeric sensor [NumericSensorElementName] going high (upper non-recoverable) has deasserted. (PSU FR Amb Temp)**

**Explanation:** This message is for the use case when an implementation has detected an Upper Non-recoverable sensor going high has deasserted.

May also be shown as 81010b010706ffff or 0x81010b010706ffff

**Severity:** Info

**Alert Category:** Critical - Temperature

**Serviceable:** No

**CIM Information:** **Prefix:** PLAT and **ID:** 0499

**SNMP Trap ID:** 0

**Automatically notify Support:** No

**User response:** No action; information only.

---

**81010b01-0707ffff Numeric sensor [NumericSensorElementName] going high (upper non-recoverable) has deasserted. (Rear BP1 Temp)**

**Explanation:** This message is for the use case when an implementation has detected an Upper Non-recoverable sensor going high has deasserted.

May also be shown as 81010b010707ffff or 0x81010b010707ffff

**Severity:** Info

**Alert Category:** Critical - Temperature

**Serviceable:** No

**CIM Information:** **Prefix:** PLAT and **ID:** 0499

**SNMP Trap ID:** 0

**Automatically notify Support:** No

**User response:** No action; information only.

---

**81010b01-0708ffff Numeric sensor [NumericSensorElementName] going high (upper non-recoverable) has deasserted. (Rear BP2 Temp)**

**Explanation:** This message is for the use case when an implementation has detected an Upper Non-recoverable sensor going high has deasserted.

May also be shown as 81010b010708ffff or 0x81010b010708ffff

**Severity:** Info

**Alert Category:** Critical - Temperature

**Serviceable:** No

**CIM Information:** **Prefix:** PLAT and **ID:** 0499

**SNMP Trap ID:** 0

**Automatically notify Support:** No

**User response:** No action; information only.

**81010b01-1401ffff Numeric sensor [NumericSensorElementName] going high (upper non-recoverable) has deasserted. (CPU1 VR Temp)**

**Explanation:** This message is for the use case when an implementation has detected an Upper Non-recoverable sensor going high has deasserted.

May also be shown as 81010b011401ffff or 0x81010b011401ffff

**Severity:** Info

**Alert Category:** Critical - Temperature

**Serviceable:** No

**CIM Information:** **Prefix:** PLAT and **ID:** 0499

**SNMP Trap ID:** 0

**Automatically notify Support:** No

**User response:** No action; information only.

---

**81010b01-1402ffff Numeric sensor [NumericSensorElementName] going high (upper non-recoverable) has deasserted. (CPU2 VR Temp)**

**Explanation:** This message is for the use case when an implementation has detected an Upper Non-recoverable sensor going high has deasserted.

May also be shown as 81010b011402ffff or 0x81010b011402ffff

**Severity:** Info

**Alert Category:** Critical - Temperature

**Serviceable:** No

**CIM Information:** **Prefix:** PLAT and **ID:** 0499

**SNMP Trap ID:** 0

**Automatically notify Support:** No

**User response:** No action; information only.

---

**81010b01-1403ffff Numeric sensor [NumericSensorElementName] going high (upper non-recoverable) has deasserted. (DIMM AB VR Temp)**

**Explanation:** This message is for the use case when an implementation has detected an Upper Non-recoverable sensor going high has deasserted.

May also be shown as 81010b011403ffff or 0x81010b011403ffff

**Severity:** Info

**Alert Category:** Critical - Temperature

**Serviceable:** No

**CIM Information:** **Prefix:** PLAT and **ID:** 0499

**SNMP Trap ID:** 0

**Automatically notify Support:** No

**User response:** No action; information only.

**81010b01-1404ffff Numeric sensor [NumericSensorElementName] going high (upper non-recoverable) has deasserted. (DIMM CD VR Temp)**

**Explanation:** This message is for the use case when an implementation has detected an Upper Non-recoverable sensor going high has deasserted.

May also be shown as 81010b011404ffff or 0x81010b011404ffff

**Severity:** Info

**Alert Category:** Critical - Temperature

**Serviceable:** No

**CIM Information:** **Prefix:** PLAT and **ID:** 0499

**SNMP Trap ID:** 0

**Automatically notify Support:** No

**User response:** No action; information only.

---

**81010b01-1405ffff Numeric sensor [NumericSensorElementName] going high (upper non-recoverable) has deasserted. (DIMM EF VR Temp)**

**Explanation:** This message is for the use case when an implementation has detected an Upper Non-recoverable sensor going high has deasserted.

May also be shown as 81010b011405ffff or 0x81010b011405ffff

**Severity:** Info

**Alert Category:** Critical - Temperature

**Serviceable:** No

**CIM Information:** **Prefix:** PLAT and **ID:** 0499

**SNMP Trap ID:** 0

**Automatically notify Support:** No

**User response:** No action; information only.

---

**81010b01-1406ffff Numeric sensor [NumericSensorElementName] going high (upper non-recoverable) has deasserted. (DIMM GH VR Temp)**

**Explanation:** This message is for the use case when an implementation has detected an Upper Non-recoverable sensor going high has deasserted.

May also be shown as 81010b011406ffff or 0x81010b011406ffff

**Severity:** Info

**Alert Category:** Critical - Temperature

**Serviceable:** No

**CIM Information:** **Prefix:** PLAT and **ID:** 0499

**SNMP Trap ID:** 0

**Automatically notify Support:** No

**User response:** No action; information only.

**81010b01-2d01ffff Numeric sensor [NumericSensorElementName] going high (upper non-recoverable) has deasserted. (PCH Temp)**

**Explanation:** This message is for the use case when an implementation has detected an Upper Non-recoverable sensor going high has deasserted.

May also be shown as 81010b012d01ffff or 0x81010b012d01ffff

**Severity:** Info

**Alert Category:** Critical - Temperature

**Serviceable:** No

**CIM Information:** **Prefix:** PLAT and **ID:** 0499

**SNMP Trap ID:** 0

**Automatically notify Support:** No

**User response:** No action; information only.

---

**81010b01-3701ffff Numeric sensor [NumericSensorElementName] going high (upper non-recoverable) has deasserted. (Ambient Temp)**

**Explanation:** This message is for the use case when an implementation has detected an Upper Non-recoverable sensor going high has deasserted.

May also be shown as 81010b013701ffff or 0x81010b013701ffff

**Severity:** Info

**Alert Category:** Critical - Temperature

**Serviceable:** No

**CIM Information:** **Prefix:** PLAT and **ID:** 0499

**SNMP Trap ID:** 0

**Automatically notify Support:** No

**User response:** No action; information only.

---

**81030006-2101ffff Sensor [SensorElementName] has asserted. (Sig Verify Fail)**

**Explanation:** This message is for the use case when an implementation has detected a Sensor has asserted.

May also be shown as 810300062101ffff or 0x810300062101ffff

**Severity:** Info

**Alert Category:** System - Other

**Serviceable:** No

**CIM Information:** **Prefix:** PLAT and **ID:** 0508

**SNMP Trap ID:**

**Automatically notify Support:** No

**User response:** No action; information only.

**81030012-2301ffff Sensor [SensorElementName] has asserted. (OS RealTime Mod)**

**Explanation:** This message is for the use case when an implementation has detected a Sensor has asserted.

May also be shown as 810300122301ffff or 0x810300122301ffff

**Severity:** Info

**Alert Category:** System - Other

**Serviceable:** No

**CIM Information:** **Prefix:** PLAT and **ID:** 0508

**SNMP Trap ID:**

**Automatically notify Support:** No

**User response:** No action; information only.

---

**81030108-1301ffff Sensor [SensorElementName] has deasserted. (PS Heavy Load)**

**Explanation:** This message is for the use case when an implementation has detected a Sensor has deasserted.

May also be shown as 810301081301ffff or 0x810301081301ffff

**Severity:** Info

**Alert Category:** System - Other

**Serviceable:** No

**CIM Information:** **Prefix:** PLAT and **ID:** 0509

**SNMP Trap ID:**

**Automatically notify Support:** No

**User response:** No action; information only.

---

**8103010c-2581ffff Sensor [SensorElementName] has deasserted. (Non-Auth DIMMs)**

**Explanation:** This message is for the use case when an implementation has detected a Sensor has deasserted.

May also be shown as 8103010c2581ffff or 0x8103010c2581ffff

**Severity:** Info

**Alert Category:** System - Other

**Serviceable:** No

**CIM Information:** **Prefix:** PLAT and **ID:** 0509

**SNMP Trap ID:**

**Automatically notify Support:** No

**User response:** No action; information only.

**81030112-0601ffff Sensor [SensorElementName] has deasserted. (SMM Mode)**

**Explanation:** This message is for the use case when an implementation has detected a Sensor has deasserted.

May also be shown as 810301120601ffff or 0x810301120601ffff

**Severity:** Info

**Alert Category:** System - Other

**Serviceable:** No

**CIM Information:** **Prefix:** PLAT and **ID:** 0509

**SNMP Trap ID:**

**Automatically notify Support:** No

**User response:** No action; information only. SMM Monitor :

---

**81070101-0c01ffff Sensor [SensorElementName] has deasserted the transition from normal to non-critical state. (Ambient Status)**

**Explanation:** This message is for the use case when an implementation has detected that a Sensor has deasserted a transition to non-critical from normal.

May also be shown as 810701010c01ffff or 0x810701010c01ffff

**Severity:** Info

**Alert Category:** Warning - Temperature

**Serviceable:** No

**CIM Information:** **Prefix:** PLAT and **ID:** 0521

**SNMP Trap ID:** 12

**Automatically notify Support:** No

**User response:** No action; information only.

---

**81070101-2c01ffff Sensor [SensorElementName] has deasserted the transition from normal to non-critical state. (ML2 OverTemp)**

**Explanation:** This message is for the use case when an implementation has detected that a Sensor has deasserted a transition to non-critical from normal.

May also be shown as 810701012c01ffff or 0x810701012c01ffff

**Severity:** Info

**Alert Category:** Warning - Temperature

**Serviceable:** No

**CIM Information:** **Prefix:** PLAT and **ID:** 0521

**SNMP Trap ID:** 12

**Automatically notify Support:** No

**User response:** No action; information only.

**8107010d-2582ffff Sensor [SensorElementName] has deasserted the transition from normal to non-critical state. (RAID Vol State)**

**Explanation:** This message is for the use case when an implementation has detected that a Sensor has deasserted a transition to non-critical from normal.

May also be shown as 8107010d2582ffff or 0x8107010d2582ffff

**Severity:** Info

**Alert Category:** Warning - Other

**Serviceable:** No

**CIM Information:** **Prefix:** PLAT and **ID:** 0521

**SNMP Trap ID:** 60

**Automatically notify Support:** No

**User response:** No action; information only.

---

**8107010f-2201ffff Sensor [SensorElementName] has deasserted the transition from normal to non-critical state. (GPT Status)**

**Explanation:** This message is for the use case when an implementation has detected that a Sensor has deasserted a transition to non-critical from normal.

May also be shown as 8107010f2201ffff or 0x8107010f2201ffff

**Severity:** Info

**Alert Category:** Warning - Other

**Serviceable:** No

**CIM Information:** **Prefix:** PLAT and **ID:** 0521

**SNMP Trap ID:** 60

**Automatically notify Support:** No

**User response:** No action; information only.

---

**8107010f-2582ffff Sensor [SensorElementName] has deasserted the transition from normal to non-critical state. (I/O Resources)**

**Explanation:** This message is for the use case when an implementation has detected that a Sensor has deasserted a transition to non-critical from normal.

May also be shown as 8107010f2582ffff or 0x8107010f2582ffff

**Severity:** Info

**Alert Category:** Warning - Other

**Serviceable:** No

**CIM Information:** **Prefix:** PLAT and **ID:** 0521

**SNMP Trap ID:** 60

**Automatically notify Support:** No

**User response:** No action; information only.

**81070128-2e01ffff Sensor [SensorElementName] has deasserted the transition from normal to non-critical state. (ME Recovery)**

**Explanation:** This message is for the use case when an implementation has detected that a Sensor has deasserted a transition to non-critical from normal.

May also be shown as 810701282e01ffff or 0x810701282e01ffff

**Severity:** Info

**Alert Category:** Warning - Other

**Serviceable:** No

**CIM Information:** **Prefix:** PLAT and **ID:** 0521

**SNMP Trap ID:** 60

**Automatically notify Support:** No

**User response:** No action; information only.

---

**81070201-0301ffff Sensor [SensorElementName] has transitioned to a less severe state from critical. (CPU 1 OverTemp)**

**Explanation:** This message is for the use case when an implementation has detected a Sensor transition to less severe from critical.

May also be shown as 810702010301ffff or 0x810702010301ffff

**Severity:** Info

**Alert Category:** Critical - Temperature

**Serviceable:** No

**CIM Information:** **Prefix:** PLAT and **ID:** 0523

**SNMP Trap ID:** 0

**Automatically notify Support:** No

**User response:** No action; information only.

---

**81070201-0302ffff Sensor [SensorElementName] has transitioned to a less severe state from critical. (CPU 2 OverTemp)**

**Explanation:** This message is for the use case when an implementation has detected a Sensor transition to less severe from critical.

May also be shown as 810702010302ffff or 0x810702010302ffff

**Severity:** Info

**Alert Category:** Critical - Temperature

**Serviceable:** No

**CIM Information:** **Prefix:** PLAT and **ID:** 0523

**SNMP Trap ID:** 0

**Automatically notify Support:** No

**User response:** No action; information only.

**81070202-0701ffff Sensor [SensorElementName] has transitioned to a less severe state from critical. (SysBrd Vol Fault)**

**Explanation:** This message is for the use case when an implementation has detected a Sensor transition to less severe from critical.

May also be shown as 810702020701ffff or 0x810702020701ffff

**Severity:** Info

**Alert Category:** Critical - Voltage

**Serviceable:** No

**CIM Information:** **Prefix:** PLAT and **ID:** 0523

**SNMP Trap ID:** 1

**Automatically notify Support:** No

**User response:** No action; information only.

---

**81070204-0a01ffff Sensor [SensorElementName] has transitioned to a less severe state from critical. (PS 1 Fan Fault)**

**Explanation:** This message is for the use case when an implementation has detected a Sensor transition to less severe from critical.

May also be shown as 810702040a01ffff or 0x810702040a01ffff

**Severity:** Info

**Alert Category:** Critical - Fan Failure

**Serviceable:** No

**CIM Information:** **Prefix:** PLAT and **ID:** 0523

**SNMP Trap ID:** 11

**Automatically notify Support:** No

**User response:** No action; information only.

---

**81070204-0a02ffff Sensor [SensorElementName] has transitioned to a less severe state from critical. (PS 2 Fan Fault)**

**Explanation:** This message is for the use case when an implementation has detected a Sensor transition to less severe from critical.

May also be shown as 810702040a02ffff or 0x810702040a02ffff

**Severity:** Info

**Alert Category:** Critical - Fan Failure

**Serviceable:** No

**CIM Information:** **Prefix:** PLAT and **ID:** 0523

**SNMP Trap ID:** 11

**Automatically notify Support:** No

**User response:** No action; information only.

**81070208-0a01ffff Sensor [SensorElementName] has transitioned to a less severe state from critical. (PS 1 Therm Fault)**

**Explanation:** This message is for the use case when an implementation has detected a Sensor transition to less severe from critical.

May also be shown as 810702080a01ffff or 0x810702080a01ffff

**Severity:** Info

**Alert Category:** Critical - Power

**Serviceable:** No

**CIM Information:** **Prefix:** PLAT and **ID:** 0523

**SNMP Trap ID:** 4

**Automatically notify Support:** No

**User response:** No action; information only.

---

**81070208-0a02ffff Sensor [SensorElementName] has transitioned to a less severe state from critical. (PS 2 Therm Fault)**

**Explanation:** This message is for the use case when an implementation has detected a Sensor transition to less severe from critical.

May also be shown as 810702080a02ffff or 0x810702080a02ffff

**Severity:** Info

**Alert Category:** Critical - Power

**Serviceable:** No

**CIM Information:** **Prefix:** PLAT and **ID:** 0523

**SNMP Trap ID:** 4

**Automatically notify Support:** No

**User response:** No action; information only.

---

**8107020d-2582ffff Sensor [SensorElementName] has transitioned to a less severe state from critical. (RAID Vol State)**

**Explanation:** This message is for the use case when an implementation has detected a Sensor transition to less severe from critical.

May also be shown as 8107020d2582ffff or 0x8107020d2582ffff

**Severity:** Info

**Alert Category:** Critical - Other

**Serviceable:** No

**CIM Information:** **Prefix:** PLAT and **ID:** 0523

**SNMP Trap ID:** 50

**Automatically notify Support:** No

**User response:** No action; information only.

**8107020f-2201ffff Sensor [SensorElementName] has transitioned to a less severe state from critical. (TXT ACM Module)**

**Explanation:** This message is for the use case when an implementation has detected a Sensor transition to less severe from critical.

May also be shown as 8107020f2201ffff or 0x8107020f2201ffff

**Severity:** Info

**Alert Category:** Critical - Other

**Serviceable:** No

**CIM Information:** **Prefix:** PLAT and **ID:** 0523

**SNMP Trap ID:** 50

**Automatically notify Support:** No

**User response:** No action; information only. nvDIMM Flash :

---

**8107020f-2582ffff Sensor [SensorElementName] has transitioned to a less severe state from critical. (I/O Resources)**

**Explanation:** This message is for the use case when an implementation has detected a Sensor transition to less severe from critical.

May also be shown as 8107020f2582ffff or 0x8107020f2582ffff

**Severity:** Info

**Alert Category:** Critical - Other

**Serviceable:** No

**CIM Information:** **Prefix:** PLAT and **ID:** 0523

**SNMP Trap ID:** 50

**Automatically notify Support:** No

**User response:** No action; information only.

---

**81070214-2201ffff Sensor [SensorElementName] has transitioned to a less severe state from critical. (TPM Lock)**

**Explanation:** This message is for the use case when an implementation has detected a Sensor transition to less severe from critical.

May also be shown as 810702142201ffff or 0x810702142201ffff

**Severity:** Info

**Alert Category:** Critical - Other

**Serviceable:** No

**CIM Information:** **Prefix:** PLAT and **ID:** 0523

**SNMP Trap ID:** 50

**Automatically notify Support:** No

**User response:** No action; information only.

**81070219-0701ffff Sensor [SensorElementName] has transitioned to a less severe state from critical. (SysBrd Fault)**

**Explanation:** This message is for the use case when an implementation has detected a Sensor transition to less severe from critical.

May also be shown as 810702190701ffff or 0x810702190701ffff

**Severity:** Info

**Alert Category:** Critical - Other

**Serviceable:** No

**CIM Information:** **Prefix:** PLAT and **ID:** 0523

**SNMP Trap ID:** 50

**Automatically notify Support:** No

**User response:** No action; information only.

---

**8107021b-0301ffff Sensor [SensorElementName] has transitioned to a less severe state from critical. (CPU 1 QPILinkErr)**

**Explanation:** This message is for the use case when an implementation has detected a Sensor transition to less severe from critical.

May also be shown as 8107021b0301ffff or 0x8107021b0301ffff

**Severity:** Info

**Alert Category:** Critical - Other

**Serviceable:** No

**CIM Information:** **Prefix:** PLAT and **ID:** 0523

**SNMP Trap ID:** 50

**Automatically notify Support:** No

**User response:** No action; information only.

---

**8107021b-0302ffff Sensor [SensorElementName] has transitioned to a less severe state from critical. (CPU 2 QPILinkErr)**

**Explanation:** This message is for the use case when an implementation has detected a Sensor transition to less severe from critical.

May also be shown as 8107021b0302ffff or 0x8107021b0302ffff

**Severity:** Info

**Alert Category:** Critical - Other

**Serviceable:** No

**CIM Information:** **Prefix:** PLAT and **ID:** 0523

**SNMP Trap ID:** 50

**Automatically notify Support:** No

**User response:** No action; information only.

**81070228-2e01ffff Sensor [SensorElementName] has transitioned to a less severe state from critical. (ME Error)**

**Explanation:** This message is for the use case when an implementation has detected a Sensor transition to less severe from critical.

May also be shown as 810702282e01ffff or 0x810702282e01ffff

**Severity:** Info

**Alert Category:** Critical - Other

**Serviceable:** No

**CIM Information:** **Prefix:** PLAT and **ID:** 0523

**SNMP Trap ID:** 50

**Automatically notify Support:** No

**User response:** No action; information only. ME Flash Error :

---

**81070301-0301ffff Sensor [SensorElementName] has deasserted the transition to non-recoverable from a less severe state. (CPU 1 OverTemp)**

**Explanation:** This message is for the use case when an implementation has detected that the Sensor transition to non-recoverable from less severe has deasserted.

May also be shown as 810703010301ffff or 0x810703010301ffff

**Severity:** Info

**Alert Category:** Critical - Temperature

**Serviceable:** No

**CIM Information:** **Prefix:** PLAT and **ID:** 0525

**SNMP Trap ID:** 0

**Automatically notify Support:** No

**User response:** No action; information only.

---

**81070301-0302ffff Sensor [SensorElementName] has deasserted the transition to non-recoverable from a less severe state. (CPU 2 OverTemp)**

**Explanation:** This message is for the use case when an implementation has detected that the Sensor transition to non-recoverable from less severe has deasserted.

May also be shown as 810703010302ffff or 0x810703010302ffff

**Severity:** Info

**Alert Category:** Critical - Temperature

**Serviceable:** No

**CIM Information:** **Prefix:** PLAT and **ID:** 0525

**SNMP Trap ID:** 0

**Automatically notify Support:** No

**User response:** No action; information only.

**81070301-2c01ffff Sensor [SensorElementName] has deasserted the transition to non-recoverable from a less severe state. (ML2 OverTemp)**

**Explanation:** This message is for the use case when an implementation has detected that the Sensor transition to non-recoverable from less severe has deasserted.

May also be shown as 810703012c01ffff or 0x810703012c01ffff

**Severity:** Info

**Alert Category:** Critical - Temperature

**Serviceable:** No

**CIM Information:** **Prefix:** PLAT and **ID:** 0525

**SNMP Trap ID:** 0

**Automatically notify Support:** No

**User response:** No action; information only.

---

**8107030d-2582ffff Sensor [SensorElementName] has deasserted the transition to non-recoverable from a less severe state. (RAID Vol State)**

**Explanation:** This message is for the use case when an implementation has detected that the Sensor transition to non-recoverable from less severe has deasserted.

May also be shown as 8107030d2582ffff or 0x8107030d2582ffff

**Severity:** Info

**Alert Category:** Critical - Other

**Serviceable:** No

**CIM Information:** **Prefix:** PLAT and **ID:** 0525

**SNMP Trap ID:** 50

**Automatically notify Support:** No

**User response:** No action; information only.

---

**81070608-0a01ffff Sensor [SensorElementName] has deasserted the transition to non-recoverable. (PS1 12V OC Fault)**

**Explanation:** This message is for the use case when an implementation has detected that the Sensor transition to non-recoverable has deasserted.

May also be shown as 810706080a01ffff or 0x810706080a01ffff

**Severity:** Info

**Alert Category:** Critical - Power

**Serviceable:** No

**CIM Information:** **Prefix:** PLAT and **ID:** 0531

**SNMP Trap ID:** 4

**Automatically notify Support:** No

**User response:** No action; information only. PS1 12V OV Fault; PS1 12V UV Fault; PS1 12V OC Fault; PS1 12Vaux Fault;

**81070608-0a02ffff Sensor [SensorElementName] has deasserted the transition to non-recoverable. (PS2 12V OC Fault)**

**Explanation:** This message is for the use case when an implementation has detected that the Sensor transition to non-recoverable has deasserted.

May also be shown as 810706080a02ffff or 0x810706080a02ffff

**Severity:** Info

**Alert Category:** Critical - Power

**Serviceable:** No

**CIM Information:** **Prefix:** PLAT and **ID:** 0531

**SNMP Trap ID:** 4

**Automatically notify Support:** No

**User response:** PS2 12V OV Fault; PS2 12V UV Fault; PS2 12V OC Fault; PS2 12Vaux Fault; No action; information only.

---

**810b010a-1e81ffff Redundancy Lost for [RedundancySetElementName] has deasserted. (Fan Zone 1)**

**Explanation:** This message is for the use case when Redundacy Lost has deasserted.

May also be shown as 810b010a1e81ffff or 0x810b010a1e81ffff

**Severity:** Info

**Alert Category:** Critical - Fan Failure

**Serviceable:** No

**CIM Information:** **Prefix:** PLAT and **ID:** 0803

**SNMP Trap ID:** 11

**Automatically notify Support:** No

**User response:** No action; information only.

---

**810b010a-1e82ffff Redundancy Lost for [RedundancySetElementName] has deasserted. (Fan Zone 2)**

**Explanation:** This message is for the use case when Redundacy Lost has deasserted.

May also be shown as 810b010a1e82ffff or 0x810b010a1e82ffff

**Severity:** Info

**Alert Category:** Critical - Fan Failure

**Serviceable:** No

**CIM Information:** **Prefix:** PLAT and **ID:** 0803

**SNMP Trap ID:** 11

**Automatically notify Support:** No

**User response:** No action; information only.

**810b010a-1e83ffff Redundancy Lost for [RedundancySetElementName] has deasserted. (Fan Zone 3)**

**Explanation:** This message is for the use case when Redundacy Lost has deasserted.

May also be shown as 810b010a1e83ffff or 0x810b010a1e83ffff

**Severity:** Info

**Alert Category:** Critical - Fan Failure

**Serviceable:** No

**CIM Information:** **Prefix:** PLAT and **ID:** 0803

**SNMP Trap ID:** 11

**Automatically notify Support:** No

**User response:** No action; information only.

---

**810b010a-1e84ffff Redundancy Lost for [RedundancySetElementName] has deasserted. (Fan Zone 4)**

**Explanation:** This message is for the use case when Redundacy Lost has deasserted.

May also be shown as 810b010a1e84ffff or 0x810b010a1e84ffff

**Severity:** Info

**Alert Category:** Critical - Fan Failure

**Serviceable:** No

**CIM Information:** **Prefix:** PLAT and **ID:** 0803

**SNMP Trap ID:** 11

**Automatically notify Support:** No

**User response:** No action; information only.

---

**810b010c-2581ffff Redundancy Lost for [RedundancySetElementName] has deasserted. (Backup Memory)**

**Explanation:** This message is for the use case when Redundacy Lost has deasserted.

May also be shown as 810b010c2581ffff or 0x810b010c2581ffff

**Severity:** Info

**Alert Category:** Critical - Memory

**Serviceable:** No

**CIM Information:** **Prefix:** PLAT and **ID:** 0803

**SNMP Trap ID:** 41

**Automatically notify Support:** No

**User response:** No action; information only.

**810b0309-1301ffff Non-redundant:Sufficient Resources from Redundancy Degraded or Fully Redundant for [RedundancySetElementName] has deasserted. (Power Resource)**

**Explanation:** This message is for the use case when a Redundancy Set has transitioned from Non-redundant:Sufficient Resources.

May also be shown as 810b03091301ffff or 0x810b03091301ffff

**Severity:** Info

**Alert Category:** Warning - Redundant Power Supply

**Serviceable:** No

**CIM Information:** **Prefix:** PLAT and **ID:** 0807

**SNMP Trap ID:** 10

**Automatically notify Support:** No

**User response:** No action; information only.

---

**810b030c-2581ffff Non-redundant:Sufficient Resources from Redundancy Degraded or Fully Redundant for [RedundancySetElementName] has deasserted. (Backup Memory)**

**Explanation:** This message is for the use case when a Redundancy Set has transitioned from Non-redundant:Sufficient Resources.

May also be shown as 810b030c2581ffff or 0x810b030c2581ffff

**Severity:** Info

**Alert Category:** Warning - Memory

**Serviceable:** No

**CIM Information:** **Prefix:** PLAT and **ID:** 0807

**SNMP Trap ID:** 43

**Automatically notify Support:** No

**User response:** No action; information only.

---

**810b0509-1301ffff Non-redundant:Insufficient Resources for [RedundancySetElementName] has deasserted. (Power Resource)**

**Explanation:** This message is for the use case when a Redundancy Set has transitioned from Non-redundant:Insufficient Resources.

May also be shown as 810b05091301ffff or 0x810b05091301ffff

**Severity:** Info

**Alert Category:** Critical - Redundant Power Supply

**Serviceable:** No

**CIM Information:** **Prefix:** PLAT and **ID:** 0811

**SNMP Trap ID:** 9

**Automatically notify Support:** No

**User response:** No action; information only.

**810b050a-1e81ffff Non-redundant:Insufficient Resources for [RedundancySetElementName] has deasserted. (Fan Zone 1)**

**Explanation:** This message is for the use case when a Redundancy Set has transitioned from Non-redundant:Insufficient Resources.

May also be shown as 810b050a1e81ffff or 0x810b050a1e81ffff

**Severity:** Info

**Alert Category:** Critical - Fan Failure

**Serviceable:** No

**CIM Information:** **Prefix:** PLAT and **ID:** 0811

**SNMP Trap ID:** 11

**Automatically notify Support:** No

**User response:** No action; information only.

**810b050a-1e82ffff Non-redundant:Insufficient Resources for [RedundancySetElementName] has deasserted. (Fan Zone 2)**

**Explanation:** This message is for the use case when a Redundancy Set has transitioned from Non-redundant:Insufficient Resources.

May also be shown as 810b050a1e82ffff or 0x810b050a1e82ffff

**Severity:** Info

**Alert Category:** Critical - Fan Failure

**Serviceable:** No

**CIM Information:** **Prefix:** PLAT and **ID:** 0811

**SNMP Trap ID:** 11

**Automatically notify Support:** No

**User response:** No action; information only.

**810b050a-1e83ffff Non-redundant:Insufficient Resources for [RedundancySetElementName] has deasserted. (Fan Zone 3)**

**Explanation:** This message is for the use case when a Redundancy Set has transitioned from Non-redundant:Insufficient Resources.

May also be shown as 810b050a1e83ffff or 0x810b050a1e83ffff

**Severity:** Info

**Alert Category:** Critical - Fan Failure

**Serviceable:** No

**CIM Information:** **Prefix:** PLAT and **ID:** 0811

**SNMP Trap ID:** 11

**Automatically notify Support:** No

**User response:** No action; information only.

**810b050a-1e84ffff Non-redundant:Insufficient Resources for [RedundancySetElementName] has deasserted. (Fan Zone 4)**

**Explanation:** This message is for the use case when a Redundancy Set has transitioned from Non-redundant:Insufficient Resources.

May also be shown as 810b050a1e84ffff or 0x810b050a1e84ffff

**Severity:** Info

**Alert Category:** Critical - Fan Failure

**Serviceable:** No

**CIM Information:** **Prefix:** PLAT and **ID:** 0811

**SNMP Trap ID:** 11

**Automatically notify Support:** No

**User response:** No action; information only.

---

**810b050c-2581ffff Non-redundant:Insufficient Resources for [RedundancySetElementName] has deasserted. (Backup Memory)**

**Explanation:** This message is for the use case when a Redundancy Set has transitioned from Non-redundant:Insufficient Resources.

May also be shown as 810b050c2581ffff or 0x810b050c2581ffff

**Severity:** Info

**Alert Category:** Critical - Memory

**Serviceable:** No

**CIM Information:** **Prefix:** PLAT and **ID:** 0811

**SNMP Trap ID:** 41

**Automatically notify Support:** No

**User response:** No action; information only.

---

**816f0007-0301ffff [ProcessorElementName] has Recovered from IERR. (CPU 1)**

**Explanation:** This message is for the use case when an implementation has detected a Processor Recovered - IERR Condition.

May also be shown as 816f00070301ffff or 0x816f00070301ffff

**Severity:** Info

**Alert Category:** Critical - CPU

**Serviceable:** No

**CIM Information:** **Prefix:** PLAT and **ID:** 0043

**SNMP Trap ID:** 40

**Automatically notify Support:** No

**User response:** No action; information only.

**816f0007-0302ffff [ProcessorElementName] has Recovered from IERR. (CPU 2)**

**Explanation:** This message is for the use case when an implementation has detected a Processor Recovered - IERR Condition.

May also be shown as 816f00070302ffff or 0x816f00070302ffff

**Severity:** Info

**Alert Category:** Critical - CPU

**Serviceable:** No

**CIM Information:** **Prefix:** PLAT and **ID:** 0043

**SNMP Trap ID:** 40

**Automatically notify Support:** No

**User response:** No action; information only.

---

**816f0008-0a01ffff [PowerSupplyElementName] has been removed from container [PhysicalPackageElementName]. (Power Supply 1)**

**Explanation:** This message is for the use case when an implementation has detected a Power Supply has been removed.

May also be shown as 816f00080a01ffff or 0x816f00080a01ffff

**Severity:** Info

**Alert Category:** System - Other

**Serviceable:** No

**CIM Information:** **Prefix:** PLAT and **ID:** 0085

**SNMP Trap ID:**

**Automatically notify Support:** No

**User response:** No action; information only.

---

**816f0008-0a02ffff [PowerSupplyElementName] has been removed from container [PhysicalPackageElementName]. (Power Supply 2)**

**Explanation:** This message is for the use case when an implementation has detected a Power Supply has been removed.

May also be shown as 816f00080a02ffff or 0x816f00080a02ffff

**Severity:** Info

**Alert Category:** System - Other

**Serviceable:** No

**CIM Information:** **Prefix:** PLAT and **ID:** 0085

**SNMP Trap ID:**

**Automatically notify Support:** No

**User response:** No action; information only.

**816f0009-1301ffff [PowerSupplyElementName] has been turned on. (Host Power)**

**Explanation:** This message is for the use case when an implementation has detected a Power Unit that has been Enabled.

May also be shown as 816f00091301ffff or 0x816f00091301ffff

**Severity:** Info

**Alert Category:** System - Power On

**Serviceable:** No

**CIM Information:** **Prefix:** PLAT and **ID:** 0107

**SNMP Trap ID:** 24

**Automatically notify Support:** No

**User response:** No action; information only.

---

**816f000d-0400ffff The Drive [StorageVolumeElementName] has been removed from unit [PhysicalPackageElementName]. (Drive 0)**

**Explanation:** This message is for the use case when an implementation has detected a Drive has been Removed.

May also be shown as 816f000d0400ffff or 0x816f000d0400ffff

**Severity:** Error

**Alert Category:** Critical - Hard Disk drive

**Serviceable:** Yes

**CIM Information:** **Prefix:** PLAT and **ID:** 0163

**SNMP Trap ID:** 5

**Automatically notify Support:** No

**User response:**

1. Reseat hard disk drive n.(n = hard disk drive number). Wait 1 minute or more before reinstalling the drive.
2. Replace the hard disk drive.
3. Make sure that the disk firmware and RAID controller firmware are at the latest level.
4. Replace backplane.

---

**816f000d-0401ffff The Drive [StorageVolumeElementName] has been removed from unit [PhysicalPackageElementName]. (Drive 1)**

**Explanation:** This message is for the use case when an implementation has detected a Drive has been Removed.

May also be shown as 816f000d0401ffff or 0x816f000d0401ffff

**Severity:** Error

**Alert Category:** Critical - Hard Disk drive

**Serviceable:** Yes

**CIM Information:** **Prefix:** PLAT and **ID:** 0163

**SNMP Trap ID:** 5

**Automatically notify Support:** No

**User response:**

1. Reseat hard disk drive n.(n = hard disk drive number). Wait 1 minute or more before reinstalling the drive.
2. Replace the hard disk drive.
3. Make sure that the disk firmware and RAID controller firmware are at the latest level.
4. Replace backplane.

**816f000d-0402ffff The Drive [StorageVolumeElementName] has been removed from unit [PhysicalPackageElementName]. (Drive 2)**

**Explanation:** This message is for the use case when an implementation has detected a Drive has been Removed.

May also be shown as 816f000d0402ffff or 0x816f000d0402ffff

**Severity:** Error

**Alert Category:** Critical - Hard Disk drive

**Serviceable:** Yes

**CIM Information:** **Prefix:** PLAT and **ID:** 0163

**SNMP Trap ID:** 5

**Automatically notify Support:** No

**User response:**

1. Reseat hard disk drive n.(n = hard disk drive number). Wait 1 minute or more before reinstalling the drive.
2. Replace the hard disk drive.
3. Make sure that the disk firmware and RAID controller firmware are at the latest level.
4. Replace backplane.

**816f000d-0403ffff The Drive [StorageVolumeElementName] has been removed from unit [PhysicalPackageElementName]. (Drive 3)**

**Explanation:** This message is for the use case when an implementation has detected a Drive has been Removed.

May also be shown as 816f000d0403ffff or 0x816f000d0403ffff

**Severity:** Error

**Alert Category:** Critical - Hard Disk drive

**Serviceable:** Yes

**CIM Information:** **Prefix:** PLAT and **ID:** 0163

**SNMP Trap ID:** 5

**Automatically notify Support:** No

**User response:**

1. Reseat hard disk drive n.(n = hard disk drive number). Wait 1 minute or more before reinstalling the drive.
2. Replace the hard disk drive.
3. Make sure that the disk firmware and RAID controller firmware are at the latest level.
4. Replace backplane.

**816f000d-0404ffff The Drive [StorageVolumeElementName] has been removed from unit [PhysicalPackageElementName]. (Drive 4)**

**Explanation:** This message is for the use case when an implementation has detected a Drive has been Removed.

May also be shown as 816f000d0404ffff or 0x816f000d0404ffff

**Severity:** Error

**Alert Category:** Critical - Hard Disk drive

**Serviceable:** Yes

**CIM Information:** **Prefix:** PLAT and **ID:** 0163

**SNMP Trap ID:** 5

**Automatically notify Support:** No

**User response:**

1. Reseat hard disk drive n.(n = hard disk drive number). Wait 1 minute or more before reinstalling the drive.
2. Replace the hard disk drive.
3. Make sure that the disk firmware and RAID controller firmware are at the latest level.
4. Replace backplane.

**816f000d-0405ffff The Drive [StorageVolumeElementName] has been removed from unit [PhysicalPackageElementName]. (Drive 5)**

**Explanation:** This message is for the use case when an implementation has detected a Drive has been Removed.

May also be shown as 816f000d0405ffff or 0x816f000d0405ffff

**Severity:** Error

**Alert Category:** Critical - Hard Disk drive

**Serviceable:** Yes

**CIM Information:** **Prefix:** PLAT and **ID:** 0163

**SNMP Trap ID:** 5

**Automatically notify Support:** No

**User response:**

1. Reseat hard disk drive n.(n = hard disk drive number). Wait 1 minute or more before reinstalling the drive.
2. Replace the hard disk drive.
3. Make sure that the disk firmware and RAID controller firmware are at the latest level.
4. Replace backplane.

**816f000d-0406ffff The Drive [StorageVolumeElementName] has been removed from unit [PhysicalPackageElementName]. (Drive 6)**

**Explanation:** This message is for the use case when an implementation has detected a Drive has been Removed.

May also be shown as 816f000d0406ffff or 0x816f000d0406ffff

**Severity:** Error

**Alert Category:** Critical - Hard Disk drive

**Serviceable:** Yes

**CIM Information:** **Prefix:** PLAT and **ID:** 0163

**SNMP Trap ID:** 5

**Automatically notify Support:** No

**User response:**

1. Reseat hard disk drive n.(n = hard disk drive number). Wait 1 minute or more before reinstalling the drive.
2. Replace the hard disk drive.
3. Make sure that the disk firmware and RAID controller firmware are at the latest level.
4. Replace backplane.

**816f000d-0407ffff The Drive [StorageVolumeElementName] has been removed from unit [PhysicalPackageElementName]. (Drive 7)**

**Explanation:** This message is for the use case when an implementation has detected a Drive has been Removed.

May also be shown as 816f000d0407ffff or 0x816f000d0407ffff

**Severity:** Error

**Alert Category:** Critical - Hard Disk drive

**Serviceable:** Yes

**CIM Information:** **Prefix:** PLAT and **ID:** 0163

**SNMP Trap ID:** 5

**Automatically notify Support:** No

**User response:**

1. Reseat hard disk drive n.(n = hard disk drive number). Wait 1 minute or more before reinstalling the drive.
2. Replace the hard disk drive.
3. Make sure that the disk firmware and RAID controller firmware are at the latest level.
4. Replace backplane.

**816f000d-0408ffff The Drive [StorageVolumeElementName] has been removed from unit [PhysicalPackageElementName]. (Drive 8)**

**Explanation:** This message is for the use case when an implementation has detected a Drive has been Removed.

May also be shown as 816f000d0408ffff or 0x816f000d0408ffff

**Severity:** Error

**Alert Category:** Critical - Hard Disk drive

**Serviceable:** Yes

**CIM Information:** **Prefix:** PLAT and **ID:** 0163

**SNMP Trap ID:** 5

**Automatically notify Support:** No

**User response:**

1. Reseat hard disk drive n.(n = hard disk drive number). Wait 1 minute or more before reinstalling the drive.
2. Replace the hard disk drive.
3. Make sure that the disk firmware and RAID controller firmware are at the latest level.
4. Replace backplane.

**816f000d-0409ffff The Drive [StorageVolumeElementName] has been removed from unit [PhysicalPackageElementName]. (Drive 9)**

**Explanation:** This message is for the use case when an implementation has detected a Drive has been Removed.

May also be shown as 816f000d0409ffff or 0x816f000d0409ffff

**Severity:** Error

**Alert Category:** Critical - Hard Disk drive

**Serviceable:** Yes

**CIM Information:** **Prefix:** PLAT and **ID:** 0163

**SNMP Trap ID:** 5

**Automatically notify Support:** No

**User response:**

1. Reseat hard disk drive n.(n = hard disk drive number). Wait 1 minute or more before reinstalling the drive.
2. Replace the hard disk drive.
3. Make sure that the disk firmware and RAID controller firmware are at the latest level.
4. Replace backplane.

**816f000d-040affff The Drive [StorageVolumeElementName] has been removed from unit [PhysicalPackageElementName]. (Drive 10)**

**Explanation:** This message is for the use case when an implementation has detected a Drive has been Removed.

May also be shown as 816f000d040affff or 0x816f000d040affff

**Severity:** Error

**Alert Category:** Critical - Hard Disk drive

**Serviceable:** Yes

**CIM Information:** **Prefix:** PLAT and **ID:** 0163

**SNMP Trap ID:** 5

**Automatically notify Support:** No

**User response:**

1. Reseat hard disk drive n.(n = hard disk drive number). Wait 1 minute or more before reinstalling the drive.
2. Replace the hard disk drive.
3. Make sure that the disk firmware and RAID controller firmware are at the latest level.
4. Replace backplane.

**816f000d-040bffff The Drive [StorageVolumeElementName] has been removed from unit [PhysicalPackageElementName]. (Drive 11)**

**Explanation:** This message is for the use case when an implementation has detected a Drive has been Removed.

May also be shown as 816f000d040bffff or 0x816f000d040bffff

**Severity:** Error

**Alert Category:** Critical - Hard Disk drive

**Serviceable:** Yes

**CIM Information:** **Prefix:** PLAT and **ID:** 0163

**SNMP Trap ID:** 5

**Automatically notify Support:** No

**User response:**

1. Reseat hard disk drive n.(n = hard disk drive number). Wait 1 minute or more before reinstalling the drive.
2. Replace the hard disk drive.
3. Make sure that the disk firmware and RAID controller firmware are at the latest level.
4. Replace backplane.

**816f000d-040cffff The Drive [StorageVolumeElementName] has been removed from unit [PhysicalPackageElementName]. (Drive 12)**

**Explanation:** This message is for the use case when an implementation has detected a Drive has been Removed.

May also be shown as 816f000d040cffff or 0x816f000d040cffff

**Severity:** Error

**Alert Category:** Critical - Hard Disk drive

**Serviceable:** Yes

**CIM Information:** **Prefix:** PLAT and **ID:** 0163

**SNMP Trap ID:** 5

**Automatically notify Support:** No

**User response:**

1. Reseat hard disk drive n.(n = hard disk drive number). Wait 1 minute or more before reinstalling the drive.
2. Replace the hard disk drive.
3. Make sure that the disk firmware and RAID controller firmware are at the latest level.
4. Replace backplane.

**816f000d-040dffff The Drive [StorageVolumeElementName] has been removed from unit [PhysicalPackageElementName]. (Drive 13)**

**Explanation:** This message is for the use case when an implementation has detected a Drive has been Removed.

May also be shown as 816f000d040dffff or 0x816f000d040dffff

**Severity:** Error

**Alert Category:** Critical - Hard Disk drive

**Serviceable:** Yes

**CIM Information:** **Prefix:** PLAT and **ID:** 0163

**SNMP Trap ID:** 5

**Automatically notify Support:** No

**User response:**

1. Reseat hard disk drive n.(n = hard disk drive number). Wait 1 minute or more before reinstalling the drive.
2. Replace the hard disk drive.
3. Make sure that the disk firmware and RAID controller firmware are at the latest level.
4. Replace backplane.

**816f000d-040effff The Drive [StorageVolumeElementName] has been removed from unit [PhysicalPackageElementName]. (Drive 14)**

**Explanation:** This message is for the use case when an implementation has detected a Drive has been Removed.

May also be shown as 816f000d040effff or 0x816f000d040effff

**Severity:** Error

**Alert Category:** Critical - Hard Disk drive

**Serviceable:** Yes

**CIM Information:** **Prefix:** PLAT and **ID:** 0163

**SNMP Trap ID:** 5

**Automatically notify Support:** No

**User response:**

1. Reseat hard disk drive n.(n = hard disk drive number). Wait 1 minute or more before reinstalling the drive.
2. Replace the hard disk drive.
3. Make sure that the disk firmware and RAID controller firmware are at the latest level.
4. Replace backplane.

**816f000d-040fffff The Drive [StorageVolumeElementName] has been removed from unit [PhysicalPackageElementName]. (Drive 15)**

**Explanation:** This message is for the use case when an implementation has detected a Drive has been Removed.

May also be shown as 816f000d040fffff or 0x816f000d040fffff

**Severity:** Error

**Alert Category:** Critical - Hard Disk drive

**Serviceable:** Yes

**CIM Information:** **Prefix:** PLAT and **ID:** 0163

**SNMP Trap ID:** 5

**Automatically notify Support:** No

**User response:**

1. Reseat hard disk drive n.(n = hard disk drive number). Wait 1 minute or more before reinstalling the drive.
2. Replace the hard disk drive.
3. Make sure that the disk firmware and RAID controller firmware are at the latest level.
4. Replace backplane.

**816f000d-0410ffff The Drive [StorageVolumeElementName] has been removed from unit [PhysicalPackageElementName]. (Drive 16)**

**Explanation:** This message is for the use case when an implementation has detected a Drive has been Removed.

May also be shown as 816f000d0410ffff or 0x816f000d0410ffff

**Severity:** Error

**Alert Category:** Critical - Hard Disk drive

**Serviceable:** Yes

**CIM Information:** **Prefix:** PLAT and **ID:** 0163

**SNMP Trap ID:** 5

**Automatically notify Support:** No

**User response:**

1. Reseat hard disk drive n.(n = hard disk drive number). Wait 1 minute or more before reinstalling the drive.
2. Replace the hard disk drive.
3. Make sure that the disk firmware and RAID controller firmware are at the latest level.
4. Replace backplane.

**816f000d-0411ffff The Drive [StorageVolumeElementName] has been removed from unit [PhysicalPackageElementName]. (Drive 17)**

**Explanation:** This message is for the use case when an implementation has detected a Drive has been Removed.

May also be shown as 816f000d0411ffff or 0x816f000d0411ffff

**Severity:** Error

**Alert Category:** Critical - Hard Disk drive

**Serviceable:** Yes

**CIM Information:** **Prefix:** PLAT and **ID:** 0163

**SNMP Trap ID:** 5

**Automatically notify Support:** No

**User response:**

1. Reseat hard disk drive n.(n = hard disk drive number). Wait 1 minute or more before reinstalling the drive.
2. Replace the hard disk drive.
3. Make sure that the disk firmware and RAID controller firmware are at the latest level.
4. Replace backplane.

**816f000d-0412ffff The Drive [StorageVolumeElementName] has been removed from unit [PhysicalPackageElementName]. (Drive 18)**

**Explanation:** This message is for the use case when an implementation has detected a Drive has been Removed.

May also be shown as 816f000d0412ffff or 0x816f000d0412ffff

**Severity:** Error

**Alert Category:** Critical - Hard Disk drive

**Serviceable:** Yes

**CIM Information:** **Prefix:** PLAT and **ID:** 0163

**SNMP Trap ID:** 5

**Automatically notify Support:** No

**User response:**

1. Reseat hard disk drive n.(n = hard disk drive number). Wait 1 minute or more before reinstalling the drive.
2. Replace the hard disk drive.
3. Make sure that the disk firmware and RAID controller firmware are at the latest level.
4. Replace backplane.

**816f000d-0413ffff The Drive [StorageVolumeElementName] has been removed from unit [PhysicalPackageElementName]. (Drive 19)**

**Explanation:** This message is for the use case when an implementation has detected a Drive has been Removed.

May also be shown as 816f000d0413ffff or 0x816f000d0413ffff

**Severity:** Error

**Alert Category:** Critical - Hard Disk drive

**Serviceable:** Yes

**CIM Information:** **Prefix:** PLAT and **ID:** 0163

**SNMP Trap ID:** 5

**Automatically notify Support:** No

**User response:**

1. Reseat hard disk drive n.(n = hard disk drive number). Wait 1 minute or more before reinstalling the drive.
2. Replace the hard disk drive.
3. Make sure that the disk firmware and RAID controller firmware are at the latest level.
4. Replace backplane.

**816f000d-0414ffff The Drive [StorageVolumeElementName] has been removed from unit [PhysicalPackageElementName]. (Drive 20)**

**Explanation:** This message is for the use case when an implementation has detected a Drive has been Removed.

May also be shown as 816f000d0414ffff or 0x816f000d0414ffff

**Severity:** Error

**Alert Category:** Critical - Hard Disk drive

**Serviceable:** Yes

**CIM Information:** **Prefix:** PLAT and **ID:** 0163

**SNMP Trap ID:** 5

**Automatically notify Support:** No

**User response:**

1. Reseat hard disk drive n.(n = hard disk drive number). Wait 1 minute or more before reinstalling the drive.
2. Replace the hard disk drive.
3. Make sure that the disk firmware and RAID controller firmware are at the latest level.
4. Replace backplane.

**816f000d-0415ffff The Drive [StorageVolumeElementName] has been removed from unit [PhysicalPackageElementName]. (Drive 21)**

**Explanation:** This message is for the use case when an implementation has detected a Drive has been Removed.

May also be shown as 816f000d0415ffff or 0x816f000d0415ffff

**Severity:** Error

**Alert Category:** Critical - Hard Disk drive

**Serviceable:** Yes

**CIM Information:** **Prefix:** PLAT and **ID:** 0163

**SNMP Trap ID:** 5

**Automatically notify Support:** No

**User response:**

1. Reseat hard disk drive n.(n = hard disk drive number). Wait 1 minute or more before reinstalling the drive.
2. Replace the hard disk drive.
3. Make sure that the disk firmware and RAID controller firmware are at the latest level.
4. Replace backplane.

**816f000d-0416ffff The Drive [StorageVolumeElementName] has been removed from unit [PhysicalPackageElementName]. (Drive 22)**

**Explanation:** This message is for the use case when an implementation has detected a Drive has been Removed.

May also be shown as 816f000d0416ffff or 0x816f000d0416ffff

**Severity:** Error

**Alert Category:** Critical - Hard Disk drive

**Serviceable:** Yes

**CIM Information:** **Prefix:** PLAT and **ID:** 0163

**SNMP Trap ID:** 5

**Automatically notify Support:** No

**User response:**

1. Reseat hard disk drive n.(n = hard disk drive number). Wait 1 minute or more before reinstalling the drive.
2. Replace the hard disk drive.
3. Make sure that the disk firmware and RAID controller firmware are at the latest level.
4. Replace backplane.

**816f000d-0417ffff The Drive [StorageVolumeElementName] has been removed from unit [PhysicalPackageElementName]. (Drive 23)**

**Explanation:** This message is for the use case when an implementation has detected a Drive has been Removed.

May also be shown as 816f000d0417ffff or 0x816f000d0417ffff

**Severity:** Error

**Alert Category:** Critical - Hard Disk drive

**Serviceable:** Yes

**CIM Information:** **Prefix:** PLAT and **ID:** 0163

**SNMP Trap ID:** 5

**Automatically notify Support:** No

**User response:**

1. Reseat hard disk drive n.(n = hard disk drive number). Wait 1 minute or more before reinstalling the drive.
2. Replace the hard disk drive.
3. Make sure that the disk firmware and RAID controller firmware are at the latest level.
4. Replace backplane.

**816f000d-0418ffff The Drive [StorageVolumeElementName] has been removed from unit [PhysicalPackageElementName]. (Drive 24)**

**Explanation:** This message is for the use case when an implementation has detected a Drive has been Removed.

May also be shown as 816f000d0418ffff or 0x816f000d0418ffff

**Severity:** Error

**Alert Category:** Critical - Hard Disk drive

**Serviceable:** Yes

**CIM Information:** **Prefix:** PLAT and **ID:** 0163

**SNMP Trap ID:** 5

**Automatically notify Support:** No

**User response:**

1. Reseat hard disk drive n.(n = hard disk drive number). Wait 1 minute or more before reinstalling the drive.
2. Replace the hard disk drive.
3. Make sure that the disk firmware and RAID controller firmware are at the latest level.
4. Replace backplane.

**816f000d-0419ffff The Drive [StorageVolumeElementName] has been removed from unit [PhysicalPackageElementName]. (Drive 25)**

**Explanation:** This message is for the use case when an implementation has detected a Drive has been Removed.

May also be shown as 816f000d0419ffff or 0x816f000d0419ffff

**Severity:** Error

**Alert Category:** Critical - Hard Disk drive

**Serviceable:** Yes

**CIM Information:** **Prefix:** PLAT and **ID:** 0163

**SNMP Trap ID:** 5

**Automatically notify Support:** No

**User response:**

1. Reseat hard disk drive n.(n = hard disk drive number). Wait 1 minute or more before reinstalling the drive.
2. Replace the hard disk drive.
3. Make sure that the disk firmware and RAID controller firmware are at the latest level.
4. Replace backplane.

**816f000d-041affff The Drive [StorageVolumeElementName] has been removed from unit [PhysicalPackageElementName]. (Drive 26)**

**Explanation:** This message is for the use case when an implementation has detected a Drive has been Removed.

May also be shown as 816f000d041affff or 0x816f000d041affff

**Severity:** Error

**Alert Category:** Critical - Hard Disk drive

**Serviceable:** Yes

**CIM Information:** **Prefix:** PLAT and **ID:** 0163

**SNMP Trap ID:** 5

**Automatically notify Support:** No

**User response:**

1. Reseat hard disk drive n.(n = hard disk drive number). Wait 1 minute or more before reinstalling the drive.
2. Replace the hard disk drive.
3. Make sure that the disk firmware and RAID controller firmware are at the latest level.
4. Replace backplane.

**816f000d-041bffff The Drive [StorageVolumeElementName] has been removed from unit [PhysicalPackageElementName]. (Drive 27)**

**Explanation:** This message is for the use case when an implementation has detected a Drive has been Removed.

May also be shown as 816f000d041bffff or 0x816f000d041bffff

**Severity:** Error

**Alert Category:** Critical - Hard Disk drive

**Serviceable:** Yes

**CIM Information:** **Prefix:** PLAT and **ID:** 0163

**SNMP Trap ID:** 5

**Automatically notify Support:** No

**User response:**

1. Reseat hard disk drive n.(n = hard disk drive number). Wait 1 minute or more before reinstalling the drive.
2. Replace the hard disk drive.
3. Make sure that the disk firmware and RAID controller firmware are at the latest level.
4. Replace backplane.

**816f000d-041cffff The Drive [StorageVolumeElementName] has been removed from unit [PhysicalPackageElementName]. (Drive 28)**

**Explanation:** This message is for the use case when an implementation has detected a Drive has been Removed.

May also be shown as 816f000d041cffff or 0x816f000d041cffff

**Severity:** Error

**Alert Category:** Critical - Hard Disk drive

**Serviceable:** Yes

**CIM Information:** **Prefix:** PLAT and **ID:** 0163

**SNMP Trap ID:** 5

**Automatically notify Support:** No

**User response:**

1. Reseat hard disk drive n.(n = hard disk drive number). Wait 1 minute or more before reinstalling the drive.
2. Replace the hard disk drive.
3. Make sure that the disk firmware and RAID controller firmware are at the latest level.
4. Replace backplane.

**816f000d-041dffff The Drive [StorageVolumeElementName] has been removed from unit [PhysicalPackageElementName]. (Drive 29)**

**Explanation:** This message is for the use case when an implementation has detected a Drive has been Removed.

May also be shown as 816f000d041dffff or 0x816f000d041dffff

**Severity:** Error

**Alert Category:** Critical - Hard Disk drive

**Serviceable:** Yes

**CIM Information:** **Prefix:** PLAT and **ID:** 0163

**SNMP Trap ID:** 5

**Automatically notify Support:** No

**User response:**

1. Reseat hard disk drive n.(n = hard disk drive number). Wait 1 minute or more before reinstalling the drive.
2. Replace the hard disk drive.
3. Make sure that the disk firmware and RAID controller firmware are at the latest level.
4. Replace backplane.

**816f000d-041effff The Drive [StorageVolumeElementName] has been removed from unit [PhysicalPackageElementName]. (Drive 30)**

**Explanation:** This message is for the use case when an implementation has detected a Drive has been Removed.

May also be shown as 816f000d041effff or 0x816f000d041effff

**Severity:** Error

**Alert Category:** Critical - Hard Disk drive

**Serviceable:** Yes

**CIM Information:** **Prefix:** PLAT and **ID:** 0163

**SNMP Trap ID:** 5

**Automatically notify Support:** No

**User response:**

1. Reseat hard disk drive n.(n = hard disk drive number). Wait 1 minute or more before reinstalling the drive.
2. Replace the hard disk drive.
3. Make sure that the disk firmware and RAID controller firmware are at the latest level.
4. Replace backplane.

---

**816f000d-041fffff The Drive [StorageVolumeElementName] has been removed from unit [PhysicalPackageElementName]. (Drive 31)**

**Explanation:** This message is for the use case when an implementation has detected a Drive has been Removed.

May also be shown as 816f000d041fffff or 0x816f000d041fffff

**Severity:** Error

**Alert Category:** Critical - Hard Disk drive

**Serviceable:** Yes

**CIM Information:** **Prefix:** PLAT and **ID:** 0163

**SNMP Trap ID:** 5

**Automatically notify Support:** No

**User response:**

1. Reseat hard disk drive n.(n = hard disk drive number). Wait 1 minute or more before reinstalling the drive.
2. Replace the hard disk drive.
3. Make sure that the disk firmware and RAID controller firmware are at the latest level.
4. Replace backplane.

**816f000f-2201ffff The System [ComputerSystemElementName] has detected a POST Error deassertion.**

**Explanation:** This message is for the use case when an implementation has detected that Post Error has deasserted.

May also be shown as 816f000f2201ffff or 0x816f000f2201ffff

**Severity:** Info

**Alert Category:** Critical - Other

**Serviceable:** No

**CIM Information:** **Prefix:** PLAT and **ID:** 0185

**SNMP Trap ID:** 50

**Automatically notify Support:** No

**User response:** If the specified sensor is one of the following, ABR Status, Firmware Error or Sys Boot Status: No action; information only.

---

**816f0013-1701ffff System [ComputerSystemElementName] has recovered from a diagnostic interrupt. (NMI State)**

**Explanation:** This message is for the use case when an implementation has detected a recovery from a Front Panel NMI / Diagnostic Interrupt

May also be shown as 816f00131701ffff or 0x816f00131701ffff

**Severity:** Info

**Alert Category:** Critical - Other

**Serviceable:** No

**CIM Information:** **Prefix:** PLAT and **ID:** 0223

**SNMP Trap ID:** 50

**Automatically notify Support:** No

**User response:** No action; information only.

---

**816f0021-2201ffff Fault condition removed on slot [PhysicalConnectorElementName] on system [ComputerSystemElementName]. (No Op ROM Space)**

**Explanation:** This message is for the use case when an implementation has detected a Fault condition in a slot has been removed.

May also be shown as 816f00212201ffff or 0x816f00212201ffff

**Severity:** Info

**Alert Category:** Critical - Other

**Serviceable:** No

**CIM Information:** **Prefix:** PLAT and **ID:** 0331

**SNMP Trap ID:** 50

**Automatically notify Support:** No

**User response:** No action; information only.

**816f0021-2582ffff Fault condition removed on slot [PhysicalConnectorElementName] on system [ComputerSystemElementName]. (All PCI Error)**

**Explanation:** This message is for the use case when an implementation has detected a Fault condition in a slot has been removed.

May also be shown as 816f00212582ffff or 0x816f00212582ffff

**Severity:** Info

**Alert Category:** Critical - Other

**Serviceable:** No

**CIM Information:** **Prefix:** PLAT and **ID:** 0331

**SNMP Trap ID:** 50

**Automatically notify Support:** No

**User response:** No action; information only. One of PCI Error :

---

**816f0021-2c01ffff Fault condition removed on slot [PhysicalConnectorElementName] on system [ComputerSystemElementName]. (ML2 Card Fault)**

**Explanation:** This message is for the use case when an implementation has detected a Fault condition in a slot has been removed.

May also be shown as 816f00212c01ffff or 0x816f00212c01ffff

**Severity:** Info

**Alert Category:** Critical - Other

**Serviceable:** No

**CIM Information:** **Prefix:** PLAT and **ID:** 0331

**SNMP Trap ID:** 50

**Automatically notify Support:** No

**User response:** No action; information only.

---

**816f0021-3001ffff Fault condition removed on slot [PhysicalConnectorElementName] on system [ComputerSystemElementName]. (Internal RAID)**

**Explanation:** This message is for the use case when an implementation has detected a Fault condition in a slot has been removed.

May also be shown as 816f00213001ffff or 0x816f00213001ffff

**Severity:** Info

**Alert Category:** Critical - Other

**Serviceable:** No

**CIM Information:** **Prefix:** PLAT and **ID:** 0331

**SNMP Trap ID:** 50

**Automatically notify Support:** No

**User response:** No action; information only. PCI 1 : PCI 2 : PCI 3 : PCI 4 : PCI 5 : PCI 6 : PCI 7 : PCI 8 :

**816f0028-2101ffff Sensor [SensorElementName] has returned to normal on management system [ComputerSystemElementName]. (TPM Cmd Failures)**

**Explanation:** This message is for the use case when an implementation has detected a Sensor returned from degraded/unavailable/failure.

May also be shown as 816f00282101ffff or 0x816f00282101ffff

**Severity:** Info

**Alert Category:** Warning - Other

**Serviceable:** No

**CIM Information:** **Prefix:** PLAT and **ID:** 0399

**SNMP Trap ID:** 60

**Automatically notify Support:** No

**User response:** No action; information only.

---

**816f0107-0301ffff An Over-Temperature Condition has been removed on [ProcessorElementName]. (CPU 1)**

**Explanation:** This message is for the use case when an implementation has detected a Over-Temperature Condition has been Removed for Processor.

May also be shown as 816f01070301ffff or 0x816f01070301ffff

**Severity:** Info

**Alert Category:** Critical - Temperature

**Serviceable:** No

**CIM Information:** **Prefix:** PLAT and **ID:** 0037

**SNMP Trap ID:** 0

**Automatically notify Support:** No

**User response:** No action; information only.

---

**816f0107-0302ffff An Over-Temperature Condition has been removed on [ProcessorElementName]. (CPU 2)**

**Explanation:** This message is for the use case when an implementation has detected a Over-Temperature Condition has been Removed for Processor.

May also be shown as 816f01070302ffff or 0x816f01070302ffff

**Severity:** Info

**Alert Category:** Critical - Temperature

**Serviceable:** No

**CIM Information:** **Prefix:** PLAT and **ID:** 0037

**SNMP Trap ID:** 0

**Automatically notify Support:** No

**User response:** No action; information only.

**816f0108-0a01ffff [PowerSupplyElementName] has returned to OK status. (Power Supply 1)**

**Explanation:** This message is for the use case when an implementation has detected a Power Supply return to normal operational status.

May also be shown as 816f01080a01ffff or 0x816f01080a01ffff

**Severity:** Info

**Alert Category:** Critical - Power

**Serviceable:** No

**CIM Information:** **Prefix:** PLAT and **ID:** 0087

**SNMP Trap ID:** 4

**Automatically notify Support:** No

**User response:** No action; information only.

---

**816f0108-0a02ffff [PowerSupplyElementName] has returned to OK status. (Power Supply 2)**

**Explanation:** This message is for the use case when an implementation has detected a Power Supply return to normal operational status.

May also be shown as 816f01080a02ffff or 0x816f01080a02ffff

**Severity:** Info

**Alert Category:** Critical - Power

**Serviceable:** No

**CIM Information:** **Prefix:** PLAT and **ID:** 0087

**SNMP Trap ID:** 4

**Automatically notify Support:** No

**User response:** No action; information only.

---

**816f010c-2001ffff Uncorrectable error recovery detected for [PhysicalMemoryElementName] on Subsystem [MemoryElementName]. (DIMM 1)**

**Explanation:** This message is for the use case when an implementation has detected a Memory uncorrectable error recovery.

May also be shown as 816f010c2001ffff or 0x816f010c2001ffff

**Severity:** Info

**Alert Category:** Critical - Memory

**Serviceable:** No

**CIM Information:** **Prefix:** PLAT and **ID:** 0139

**SNMP Trap ID:** 41

**Automatically notify Support:** No

**User response:** No action; information only.

**816f010c-2002ffff Uncorrectable error recovery detected for [PhysicalMemoryElementName] on Subsystem [MemoryElementName]. (DIMM 2)**

**Explanation:** This message is for the use case when an implementation has detected a Memory uncorrectable error recovery.

May also be shown as 816f010c2002ffff or 0x816f010c2002ffff

**Severity:** Info

**Alert Category:** Critical - Memory

**Serviceable:** No

**CIM Information:** **Prefix:** PLAT and **ID:** 0139

**SNMP Trap ID:** 41

**Automatically notify Support:** No

**User response:** No action; information only.

---

**816f010c-2003ffff Uncorrectable error recovery detected for [PhysicalMemoryElementName] on Subsystem [MemoryElementName]. (DIMM 3)**

**Explanation:** This message is for the use case when an implementation has detected a Memory uncorrectable error recovery.

May also be shown as 816f010c2003ffff or 0x816f010c2003ffff

**Severity:** Info

**Alert Category:** Critical - Memory

**Serviceable:** No

**CIM Information:** **Prefix:** PLAT and **ID:** 0139

**SNMP Trap ID:** 41

**Automatically notify Support:** No

**User response:** No action; information only.

---

**816f010c-2004ffff Uncorrectable error recovery detected for [PhysicalMemoryElementName] on Subsystem [MemoryElementName]. (DIMM 4)**

**Explanation:** This message is for the use case when an implementation has detected a Memory uncorrectable error recovery.

May also be shown as 816f010c2004ffff or 0x816f010c2004ffff

**Severity:** Info

**Alert Category:** Critical - Memory

**Serviceable:** No

**CIM Information:** **Prefix:** PLAT and **ID:** 0139

**SNMP Trap ID:** 41

**Automatically notify Support:** No

**User response:** No action; information only.

**816f010c-2005ffff Uncorrectable error recovery detected for [PhysicalMemoryElementName] on Subsystem [MemoryElementName]. (DIMM 5)**

**Explanation:** This message is for the use case when an implementation has detected a Memory uncorrectable error recovery.

May also be shown as 816f010c2005ffff or 0x816f010c2005ffff

**Severity:** Info

**Alert Category:** Critical - Memory

**Serviceable:** No

**CIM Information:** **Prefix:** PLAT and **ID:** 0139

**SNMP Trap ID:** 41

**Automatically notify Support:** No

**User response:** No action; information only.

---

**816f010c-2006ffff Uncorrectable error recovery detected for [PhysicalMemoryElementName] on Subsystem [MemoryElementName]. (DIMM 6)**

**Explanation:** This message is for the use case when an implementation has detected a Memory uncorrectable error recovery.

May also be shown as 816f010c2006ffff or 0x816f010c2006ffff

**Severity:** Info

**Alert Category:** Critical - Memory

**Serviceable:** No

**CIM Information:** **Prefix:** PLAT and **ID:** 0139

**SNMP Trap ID:** 41

**Automatically notify Support:** No

**User response:** No action; information only.

---

**816f010c-2007ffff Uncorrectable error recovery detected for [PhysicalMemoryElementName] on Subsystem [MemoryElementName]. (DIMM 7)**

**Explanation:** This message is for the use case when an implementation has detected a Memory uncorrectable error recovery.

May also be shown as 816f010c2007ffff or 0x816f010c2007ffff

**Severity:** Info

**Alert Category:** Critical - Memory

**Serviceable:** No

**CIM Information:** **Prefix:** PLAT and **ID:** 0139

**SNMP Trap ID:** 41

**Automatically notify Support:** No

**User response:** No action; information only.

**816f010c-2008ffff Uncorrectable error recovery detected for [PhysicalMemoryElementName] on Subsystem [MemoryElementName]. (DIMM 8)**

**Explanation:** This message is for the use case when an implementation has detected a Memory uncorrectable error recovery.

May also be shown as 816f010c2008ffff or 0x816f010c2008ffff

**Severity:** Info

**Alert Category:** Critical - Memory

**Serviceable:** No

**CIM Information:** **Prefix:** PLAT and **ID:** 0139

**SNMP Trap ID:** 41

**Automatically notify Support:** No

**User response:** No action; information only.

---

**816f010c-2009ffff Uncorrectable error recovery detected for [PhysicalMemoryElementName] on Subsystem [MemoryElementName]. (DIMM 9)**

**Explanation:** This message is for the use case when an implementation has detected a Memory uncorrectable error recovery.

May also be shown as 816f010c2009ffff or 0x816f010c2009ffff

**Severity:** Info

**Alert Category:** Critical - Memory

**Serviceable:** No

**CIM Information:** **Prefix:** PLAT and **ID:** 0139

**SNMP Trap ID:** 41

**Automatically notify Support:** No

**User response:** No action; information only.

---

**816f010c-200affff Uncorrectable error recovery detected for [PhysicalMemoryElementName] on Subsystem [MemoryElementName]. (DIMM 10)**

**Explanation:** This message is for the use case when an implementation has detected a Memory uncorrectable error recovery.

May also be shown as 816f010c200affff or 0x816f010c200affff

**Severity:** Info

**Alert Category:** Critical - Memory

**Serviceable:** No

**CIM Information:** **Prefix:** PLAT and **ID:** 0139

**SNMP Trap ID:** 41

**Automatically notify Support:** No

**User response:** No action; information only.

**816f010c-200bffff Uncorrectable error recovery detected for [PhysicalMemoryElementName] on Subsystem [MemoryElementName]. (DIMM 11)**

**Explanation:** This message is for the use case when an implementation has detected a Memory uncorrectable error recovery.

May also be shown as 816f010c200bffff or 0x816f010c200bffff

**Severity:** Info

**Alert Category:** Critical - Memory

**Serviceable:** No

**CIM Information:** **Prefix:** PLAT and **ID:** 0139

**SNMP Trap ID:** 41

**Automatically notify Support:** No

**User response:** No action; information only.

---

**816f010c-200cffff Uncorrectable error recovery detected for [PhysicalMemoryElementName] on Subsystem [MemoryElementName]. (DIMM 12)**

**Explanation:** This message is for the use case when an implementation has detected a Memory uncorrectable error recovery.

May also be shown as 816f010c200cffff or 0x816f010c200cffff

**Severity:** Info

**Alert Category:** Critical - Memory

**Serviceable:** No

**CIM Information:** **Prefix:** PLAT and **ID:** 0139

**SNMP Trap ID:** 41

**Automatically notify Support:** No

**User response:** No action; information only.

---

**816f010c-200dffff Uncorrectable error recovery detected for [PhysicalMemoryElementName] on Subsystem [MemoryElementName]. (DIMM 13)**

**Explanation:** This message is for the use case when an implementation has detected a Memory uncorrectable error recovery.

May also be shown as 816f010c200dffff or 0x816f010c200dffff

**Severity:** Info

**Alert Category:** Critical - Memory

**Serviceable:** No

**CIM Information:** **Prefix:** PLAT and **ID:** 0139

**SNMP Trap ID:** 41

**Automatically notify Support:** No

**User response:** No action; information only.

**816f010c-200effff Uncorrectable error recovery detected for [PhysicalMemoryElementName] on Subsystem [MemoryElementName]. (DIMM 14)**

**Explanation:** This message is for the use case when an implementation has detected a Memory uncorrectable error recovery.

May also be shown as 816f010c200effff or 0x816f010c200effff

**Severity:** Info

**Alert Category:** Critical - Memory

**Serviceable:** No

**CIM Information:** **Prefix:** PLAT and **ID:** 0139

**SNMP Trap ID:** 41

**Automatically notify Support:** No

**User response:** No action; information only.

---

**816f010c-200fffff Uncorrectable error recovery detected for [PhysicalMemoryElementName] on Subsystem [MemoryElementName]. (DIMM 15)**

**Explanation:** This message is for the use case when an implementation has detected a Memory uncorrectable error recovery.

May also be shown as 816f010c200fffff or 0x816f010c200fffff

**Severity:** Info

**Alert Category:** Critical - Memory

**Serviceable:** No

**CIM Information:** **Prefix:** PLAT and **ID:** 0139

**SNMP Trap ID:** 41

**Automatically notify Support:** No

**User response:** No action; information only.

---

**816f010c-2010ffff Uncorrectable error recovery detected for [PhysicalMemoryElementName] on Subsystem [MemoryElementName]. (DIMM 16)**

**Explanation:** This message is for the use case when an implementation has detected a Memory uncorrectable error recovery.

May also be shown as 816f010c2010ffff or 0x816f010c2010ffff

**Severity:** Info

**Alert Category:** Critical - Memory

**Serviceable:** No

**CIM Information:** **Prefix:** PLAT and **ID:** 0139

**SNMP Trap ID:** 41

**Automatically notify Support:** No

**User response:** No action; information only.

**816f010c-2011ffff Uncorrectable error recovery detected for [PhysicalMemoryElementName] on Subsystem [MemoryElementName]. (DIMM 17)**

**Explanation:** This message is for the use case when an implementation has detected a Memory uncorrectable error recovery.

May also be shown as 816f010c2011ffff or 0x816f010c2011ffff

**Severity:** Info

**Alert Category:** Critical - Memory

**Serviceable:** No

**CIM Information:** **Prefix:** PLAT and **ID:** 0139

**SNMP Trap ID:** 41

**Automatically notify Support:** No

**User response:** No action; information only.

---

**816f010c-2012ffff Uncorrectable error recovery detected for [PhysicalMemoryElementName] on Subsystem [MemoryElementName]. (DIMM 18)**

**Explanation:** This message is for the use case when an implementation has detected a Memory uncorrectable error recovery.

May also be shown as 816f010c2012ffff or 0x816f010c2012ffff

**Severity:** Info

**Alert Category:** Critical - Memory

**Serviceable:** No

**CIM Information:** **Prefix:** PLAT and **ID:** 0139

**SNMP Trap ID:** 41

**Automatically notify Support:** No

**User response:** No action; information only.

---

**816f010c-2013ffff Uncorrectable error recovery detected for [PhysicalMemoryElementName] on Subsystem [MemoryElementName]. (DIMM 19)**

**Explanation:** This message is for the use case when an implementation has detected a Memory uncorrectable error recovery.

May also be shown as 816f010c2013ffff or 0x816f010c2013ffff

**Severity:** Info

**Alert Category:** Critical - Memory

**Serviceable:** No

**CIM Information:** **Prefix:** PLAT and **ID:** 0139

**SNMP Trap ID:** 41

**Automatically notify Support:** No

**User response:** No action; information only.

**816f010c-2014ffff Uncorrectable error recovery detected for [PhysicalMemoryElementName] on Subsystem [MemoryElementName]. (DIMM 20)**

**Explanation:** This message is for the use case when an implementation has detected a Memory uncorrectable error recovery.

May also be shown as 816f010c2014ffff or 0x816f010c2014ffff

**Severity:** Info

**Alert Category:** Critical - Memory

**Serviceable:** No

**CIM Information:** **Prefix:** PLAT and **ID:** 0139

**SNMP Trap ID:** 41

**Automatically notify Support:** No

**User response:** No action; information only.

---

**816f010c-2015ffff Uncorrectable error recovery detected for [PhysicalMemoryElementName] on Subsystem [MemoryElementName]. (DIMM 21)**

**Explanation:** This message is for the use case when an implementation has detected a Memory uncorrectable error recovery.

May also be shown as 816f010c2015ffff or 0x816f010c2015ffff

**Severity:** Info

**Alert Category:** Critical - Memory

**Serviceable:** No

**CIM Information:** **Prefix:** PLAT and **ID:** 0139

**SNMP Trap ID:** 41

**Automatically notify Support:** No

**User response:** No action; information only.

---

**816f010c-2016ffff Uncorrectable error recovery detected for [PhysicalMemoryElementName] on Subsystem [MemoryElementName]. (DIMM 22)**

**Explanation:** This message is for the use case when an implementation has detected a Memory uncorrectable error recovery.

May also be shown as 816f010c2016ffff or 0x816f010c2016ffff

**Severity:** Info

**Alert Category:** Critical - Memory

**Serviceable:** No

**CIM Information:** **Prefix:** PLAT and **ID:** 0139

**SNMP Trap ID:** 41

**Automatically notify Support:** No

**User response:** No action; information only.

**816f010c-2017ffff Uncorrectable error recovery detected for [PhysicalMemoryElementName] on Subsystem [MemoryElementName]. (DIMM 23)**

**Explanation:** This message is for the use case when an implementation has detected a Memory uncorrectable error recovery.

May also be shown as 816f010c2017ffff or 0x816f010c2017ffff

**Severity:** Info

**Alert Category:** Critical - Memory

**Serviceable:** No

**CIM Information:** **Prefix:** PLAT and **ID:** 0139

**SNMP Trap ID:** 41

**Automatically notify Support:** No

**User response:** No action; information only.

---

**816f010c-2018ffff Uncorrectable error recovery detected for [PhysicalMemoryElementName] on Subsystem [MemoryElementName]. (DIMM 24)**

**Explanation:** This message is for the use case when an implementation has detected a Memory uncorrectable error recovery.

May also be shown as 816f010c2018ffff or 0x816f010c2018ffff

**Severity:** Info

**Alert Category:** Critical - Memory

**Serviceable:** No

**CIM Information:** **Prefix:** PLAT and **ID:** 0139

**SNMP Trap ID:** 41

**Automatically notify Support:** No

**User response:** No action; information only.

---

**816f010c-2581ffff Uncorrectable error recovery detected for [PhysicalMemoryElementName] on Subsystem [MemoryElementName]. (All DIMMS)**

**Explanation:** This message is for the use case when an implementation has detected a Memory uncorrectable error recovery.

May also be shown as 816f010c2581ffff or 0x816f010c2581ffff

**Severity:** Info

**Alert Category:** Critical - Memory

**Serviceable:** No

**CIM Information:** **Prefix:** PLAT and **ID:** 0139

**SNMP Trap ID:** 41

**Automatically notify Support:** No

**User response:** No action; information only. One of the DIMMs :

**816f010d-0400ffff The Drive [StorageVolumeElementName] has been enabled. (Drive 0)**

**Explanation:** This message is for the use case when an implementation has detected a Drive was Enabled.

May also be shown as 816f010d0400ffff or 0x816f010d0400ffff

**Severity:** Info

**Alert Category:** Critical - Hard Disk drive

**Serviceable:** No

**CIM Information:** **Prefix:** PLAT and **ID:** 0167

**SNMP Trap ID:** 5

**Automatically notify Support:** No

**User response:** No action; information only.

---

**816f010d-0401ffff The Drive [StorageVolumeElementName] has been enabled. (Drive 1)**

**Explanation:** This message is for the use case when an implementation has detected a Drive was Enabled.

May also be shown as 816f010d0401ffff or 0x816f010d0401ffff

**Severity:** Info

**Alert Category:** Critical - Hard Disk drive

**Serviceable:** No

**CIM Information:** **Prefix:** PLAT and **ID:** 0167

**SNMP Trap ID:** 5

**Automatically notify Support:** No

**User response:** No action; information only.

---

**816f010d-0402ffff The Drive [StorageVolumeElementName] has been enabled. (Drive 2)**

**Explanation:** This message is for the use case when an implementation has detected a Drive was Enabled.

May also be shown as 816f010d0402ffff or 0x816f010d0402ffff

**Severity:** Info

**Alert Category:** Critical - Hard Disk drive

**Serviceable:** No

**CIM Information:** **Prefix:** PLAT and **ID:** 0167

**SNMP Trap ID:** 5

**Automatically notify Support:** No

**User response:** No action; information only.

**816f010d-0403ffff The Drive [StorageVolumeElementName] has been enabled. (Drive 3)**

**Explanation:** This message is for the use case when an implementation has detected a Drive was Enabled.

May also be shown as 816f010d0403ffff or 0x816f010d0403ffff

**Severity:** Info

**Alert Category:** Critical - Hard Disk drive

**Serviceable:** No

**CIM Information:** **Prefix:** PLAT and **ID:** 0167

**SNMP Trap ID:** 5

**Automatically notify Support:** No

**User response:** No action; information only.

---

**816f010d-0404ffff The Drive [StorageVolumeElementName] has been enabled. (Drive 4)**

**Explanation:** This message is for the use case when an implementation has detected a Drive was Enabled.

May also be shown as 816f010d0404ffff or 0x816f010d0404ffff

**Severity:** Info

**Alert Category:** Critical - Hard Disk drive

**Serviceable:** No

**CIM Information:** **Prefix:** PLAT and **ID:** 0167

**SNMP Trap ID:** 5

**Automatically notify Support:** No

**User response:** No action; information only.

---

**816f010d-0405ffff The Drive [StorageVolumeElementName] has been enabled. (Drive 5)**

**Explanation:** This message is for the use case when an implementation has detected a Drive was Enabled.

May also be shown as 816f010d0405ffff or 0x816f010d0405ffff

**Severity:** Info

**Alert Category:** Critical - Hard Disk drive

**Serviceable:** No

**CIM Information:** **Prefix:** PLAT and **ID:** 0167

**SNMP Trap ID:** 5

**Automatically notify Support:** No

**User response:** No action; information only.

**816f010d-0406ffff The Drive [StorageVolumeElementName] has been enabled. (Drive 6)**

**Explanation:** This message is for the use case when an implementation has detected a Drive was Enabled.

May also be shown as 816f010d0406ffff or 0x816f010d0406ffff

**Severity:** Info

**Alert Category:** Critical - Hard Disk drive

**Serviceable:** No

**CIM Information:** **Prefix:** PLAT and **ID:** 0167

**SNMP Trap ID:** 5

**Automatically notify Support:** No

**User response:** No action; information only.

---

**816f010d-0407ffff The Drive [StorageVolumeElementName] has been enabled. (Drive 7)**

**Explanation:** This message is for the use case when an implementation has detected a Drive was Enabled.

May also be shown as 816f010d0407ffff or 0x816f010d0407ffff

**Severity:** Info

**Alert Category:** Critical - Hard Disk drive

**Serviceable:** No

**CIM Information:** **Prefix:** PLAT and **ID:** 0167

**SNMP Trap ID:** 5

**Automatically notify Support:** No

**User response:** No action; information only.

---

**816f010d-0408ffff The Drive [StorageVolumeElementName] has been enabled. (Drive 8)**

**Explanation:** This message is for the use case when an implementation has detected a Drive was Enabled.

May also be shown as 816f010d0408ffff or 0x816f010d0408ffff

**Severity:** Info

**Alert Category:** Critical - Hard Disk drive

**Serviceable:** No

**CIM Information:** **Prefix:** PLAT and **ID:** 0167

**SNMP Trap ID:** 5

**Automatically notify Support:** No

**User response:** No action; information only.

**816f010d-0409ffff The Drive [StorageVolumeElementName] has been enabled. (Drive 9)**

**Explanation:** This message is for the use case when an implementation has detected a Drive was Enabled.

May also be shown as 816f010d0409ffff or 0x816f010d0409ffff

**Severity:** Info

**Alert Category:** Critical - Hard Disk drive

**Serviceable:** No

**CIM Information:** **Prefix:** PLAT and **ID:** 0167

**SNMP Trap ID:** 5

**Automatically notify Support:** No

**User response:** No action; information only.

---

**816f010d-040affff The Drive [StorageVolumeElementName] has been enabled. (Drive 10)**

**Explanation:** This message is for the use case when an implementation has detected a Drive was Enabled.

May also be shown as 816f010d040affff or 0x816f010d040affff

**Severity:** Info

**Alert Category:** Critical - Hard Disk drive

**Serviceable:** No

**CIM Information:** **Prefix:** PLAT and **ID:** 0167

**SNMP Trap ID:** 5

**Automatically notify Support:** No

**User response:** No action; information only.

---

**816f010d-040bffff The Drive [StorageVolumeElementName] has been enabled. (Drive 11)**

**Explanation:** This message is for the use case when an implementation has detected a Drive was Enabled.

May also be shown as 816f010d040bffff or 0x816f010d040bffff

**Severity:** Info

**Alert Category:** Critical - Hard Disk drive

**Serviceable:** No

**CIM Information:** **Prefix:** PLAT and **ID:** 0167

**SNMP Trap ID:** 5

**Automatically notify Support:** No

**User response:** No action; information only.

**816f010d-040cffff The Drive [StorageVolumeElementName] has been enabled. (Drive 12)**

**Explanation:** This message is for the use case when an implementation has detected a Drive was Enabled.

May also be shown as 816f010d040cffff or 0x816f010d040cffff

**Severity:** Info

**Alert Category:** Critical - Hard Disk drive

**Serviceable:** No

**CIM Information:** **Prefix:** PLAT and **ID:** 0167

**SNMP Trap ID:** 5

**Automatically notify Support:** No

**User response:** No action; information only.

---

**816f010d-040dffff The Drive [StorageVolumeElementName] has been enabled. (Drive 13)**

**Explanation:** This message is for the use case when an implementation has detected a Drive was Enabled.

May also be shown as 816f010d040dffff or 0x816f010d040dffff

**Severity:** Info

**Alert Category:** Critical - Hard Disk drive

**Serviceable:** No

**CIM Information:** **Prefix:** PLAT and **ID:** 0167

**SNMP Trap ID:** 5

**Automatically notify Support:** No

**User response:** No action; information only.

---

**816f010d-040effff The Drive [StorageVolumeElementName] has been enabled. (Drive 14)**

**Explanation:** This message is for the use case when an implementation has detected a Drive was Enabled.

May also be shown as 816f010d040effff or 0x816f010d040effff

**Severity:** Info

**Alert Category:** Critical - Hard Disk drive

**Serviceable:** No

**CIM Information:** **Prefix:** PLAT and **ID:** 0167

**SNMP Trap ID:** 5

**Automatically notify Support:** No

**User response:** No action; information only.

**816f010d-040fffff The Drive [StorageVolumeElementName] has been enabled. (Drive 15)**

**Explanation:** This message is for the use case when an implementation has detected a Drive was Enabled.

May also be shown as 816f010d040fffff or 0x816f010d040fffff

**Severity:** Info

**Alert Category:** Critical - Hard Disk drive

**Serviceable:** No

**CIM Information:** **Prefix:** PLAT and **ID:** 0167

**SNMP Trap ID:** 5

**Automatically notify Support:** No

**User response:** No action; information only.

---

**816f010d-0410ffff The Drive [StorageVolumeElementName] has been enabled. (Drive 16)**

**Explanation:** This message is for the use case when an implementation has detected a Drive was Enabled.

May also be shown as 816f010d0410ffff or 0x816f010d0410ffff

**Severity:** Info

**Alert Category:** Critical - Hard Disk drive

**Serviceable:** No

**CIM Information:** **Prefix:** PLAT and **ID:** 0167

**SNMP Trap ID:** 5

**Automatically notify Support:** No

**User response:** No action; information only.

---

**816f010d-0411ffff The Drive [StorageVolumeElementName] has been enabled. (Drive 17)**

**Explanation:** This message is for the use case when an implementation has detected a Drive was Enabled.

May also be shown as 816f010d0411ffff or 0x816f010d0411ffff

**Severity:** Info

**Alert Category:** Critical - Hard Disk drive

**Serviceable:** No

**CIM Information:** **Prefix:** PLAT and **ID:** 0167

**SNMP Trap ID:** 5

**Automatically notify Support:** No

**User response:** No action; information only.

**816f010d-0412ffff The Drive [StorageVolumeElementName] has been enabled. (Drive 18)**

**Explanation:** This message is for the use case when an implementation has detected a Drive was Enabled.

May also be shown as 816f010d0412ffff or 0x816f010d0412ffff

**Severity:** Info

**Alert Category:** Critical - Hard Disk drive

**Serviceable:** No

**CIM Information:** **Prefix:** PLAT and **ID:** 0167

**SNMP Trap ID:** 5

**Automatically notify Support:** No

**User response:** No action; information only.

---

**816f010d-0413ffff The Drive [StorageVolumeElementName] has been enabled. (Drive 19)**

**Explanation:** This message is for the use case when an implementation has detected a Drive was Enabled.

May also be shown as 816f010d0413ffff or 0x816f010d0413ffff

**Severity:** Info

**Alert Category:** Critical - Hard Disk drive

**Serviceable:** No

**CIM Information:** **Prefix:** PLAT and **ID:** 0167

**SNMP Trap ID:** 5

**Automatically notify Support:** No

**User response:** No action; information only.

---

**816f010d-0414ffff The Drive [StorageVolumeElementName] has been enabled. (Drive 20)**

**Explanation:** This message is for the use case when an implementation has detected a Drive was Enabled.

May also be shown as 816f010d0414ffff or 0x816f010d0414ffff

**Severity:** Info

**Alert Category:** Critical - Hard Disk drive

**Serviceable:** No

**CIM Information:** **Prefix:** PLAT and **ID:** 0167

**SNMP Trap ID:** 5

**Automatically notify Support:** No

**User response:** No action; information only.

**816f010d-0415ffff The Drive [StorageVolumeElementName] has been enabled. (Drive 21)**

**Explanation:** This message is for the use case when an implementation has detected a Drive was Enabled.

May also be shown as 816f010d0415ffff or 0x816f010d0415ffff

**Severity:** Info

**Alert Category:** Critical - Hard Disk drive

**Serviceable:** No

**CIM Information:** **Prefix:** PLAT and **ID:** 0167

**SNMP Trap ID:** 5

**Automatically notify Support:** No

**User response:** No action; information only.

---

**816f010d-0416ffff The Drive [StorageVolumeElementName] has been enabled. (Drive 22)**

**Explanation:** This message is for the use case when an implementation has detected a Drive was Enabled.

May also be shown as 816f010d0416ffff or 0x816f010d0416ffff

**Severity:** Info

**Alert Category:** Critical - Hard Disk drive

**Serviceable:** No

**CIM Information:** **Prefix:** PLAT and **ID:** 0167

**SNMP Trap ID:** 5

**Automatically notify Support:** No

**User response:** No action; information only.

---

**816f010d-0417ffff The Drive [StorageVolumeElementName] has been enabled. (Drive 23)**

**Explanation:** This message is for the use case when an implementation has detected a Drive was Enabled.

May also be shown as 816f010d0417ffff or 0x816f010d0417ffff

**Severity:** Info

**Alert Category:** Critical - Hard Disk drive

**Serviceable:** No

**CIM Information:** **Prefix:** PLAT and **ID:** 0167

**SNMP Trap ID:** 5

**Automatically notify Support:** No

**User response:** No action; information only.

**816f010d-0418ffff The Drive [StorageVolumeElementName] has been enabled. (Drive 24)**

**Explanation:** This message is for the use case when an implementation has detected a Drive was Enabled.

May also be shown as 816f010d0418ffff or 0x816f010d0418ffff

**Severity:** Info

**Alert Category:** Critical - Hard Disk drive

**Serviceable:** No

**CIM Information:** **Prefix:** PLAT and **ID:** 0167

**SNMP Trap ID:** 5

**Automatically notify Support:** No

**User response:** No action; information only.

---

**816f010d-0419ffff The Drive [StorageVolumeElementName] has been enabled. (Drive 25)**

**Explanation:** This message is for the use case when an implementation has detected a Drive was Enabled.

May also be shown as 816f010d0419ffff or 0x816f010d0419ffff

**Severity:** Info

**Alert Category:** Critical - Hard Disk drive

**Serviceable:** No

**CIM Information:** **Prefix:** PLAT and **ID:** 0167

**SNMP Trap ID:** 5

**Automatically notify Support:** No

**User response:** No action; information only.

---

**816f010d-041affff The Drive [StorageVolumeElementName] has been enabled. (Drive 26)**

**Explanation:** This message is for the use case when an implementation has detected a Drive was Enabled.

May also be shown as 816f010d041affff or 0x816f010d041affff

**Severity:** Info

**Alert Category:** Critical - Hard Disk drive

**Serviceable:** No

**CIM Information:** **Prefix:** PLAT and **ID:** 0167

**SNMP Trap ID:** 5

**Automatically notify Support:** No

**User response:** No action; information only.

**816f010d-041bffff The Drive [StorageVolumeElementName] has been enabled. (Drive 27)**

**Explanation:** This message is for the use case when an implementation has detected a Drive was Enabled.

May also be shown as 816f010d041bffff or 0x816f010d041bffff

**Severity:** Info

**Alert Category:** Critical - Hard Disk drive

**Serviceable:** No

**CIM Information:** **Prefix:** PLAT and **ID:** 0167

**SNMP Trap ID:** 5

**Automatically notify Support:** No

**User response:** No action; information only.

---

**816f010d-041cffff The Drive [StorageVolumeElementName] has been enabled. (Drive 28)**

**Explanation:** This message is for the use case when an implementation has detected a Drive was Enabled.

May also be shown as 816f010d041cffff or 0x816f010d041cffff

**Severity:** Info

**Alert Category:** Critical - Hard Disk drive

**Serviceable:** No

**CIM Information:** **Prefix:** PLAT and **ID:** 0167

**SNMP Trap ID:** 5

**Automatically notify Support:** No

**User response:** No action; information only.

---

**816f010d-041dffff The Drive [StorageVolumeElementName] has been enabled. (Drive 29)**

**Explanation:** This message is for the use case when an implementation has detected a Drive was Enabled.

May also be shown as 816f010d041dffff or 0x816f010d041dffff

**Severity:** Info

**Alert Category:** Critical - Hard Disk drive

**Serviceable:** No

**CIM Information:** **Prefix:** PLAT and **ID:** 0167

**SNMP Trap ID:** 5

**Automatically notify Support:** No

**User response:** No action; information only.

**816f010d-041effff The Drive [StorageVolumeElementName] has been enabled. (Drive 30)**

**Explanation:** This message is for the use case when an implementation has detected a Drive was Enabled.

May also be shown as 816f010d041effff or 0x816f010d041effff

**Severity:** Info

**Alert Category:** Critical - Hard Disk drive

**Serviceable:** No

**CIM Information:** **Prefix:** PLAT and **ID:** 0167

**SNMP Trap ID:** 5

**Automatically notify Support:** No

**User response:** No action; information only.

---

**816f010d-041fffff The Drive [StorageVolumeElementName] has been enabled. (Drive 31)**

**Explanation:** This message is for the use case when an implementation has detected a Drive was Enabled.

May also be shown as 816f010d041fffff or 0x816f010d041fffff

**Severity:** Info

**Alert Category:** Critical - Hard Disk drive

**Serviceable:** No

**CIM Information:** **Prefix:** PLAT and **ID:** 0167

**SNMP Trap ID:** 5

**Automatically notify Support:** No

**User response:** No action; information only.

---

**816f010f-2201ffff The System [ComputerSystemElementName] has recovered from a firmware hang. (Firmware Error)**

**Explanation:** This message is for the use case when an implementation has recovered from a System Firmware Hang.

May also be shown as 816f010f2201ffff or 0x816f010f2201ffff

**Severity:** Info

**Alert Category:** Critical - Other

**Serviceable:** No

**CIM Information:** **Prefix:** PLAT and **ID:** 0187

**SNMP Trap ID:** 50

**Automatically notify Support:** No

**User response:** No action; information only.

**816f0113-0301ffff System [ComputerSystemElementName] has recovered from a bus timeout. (CPU 1 PECI)**

**Explanation:** This message is for the use case when an implemenation has detected that a system has recovered from a Bus Timeout.

May also be shown as 816f01130301ffff or 0x816f01130301ffff

**Severity:** Info

**Alert Category:** Critical - Other

**Serviceable:** No

**CIM Information:** **Prefix:** PLAT and **ID:** 0225

**SNMP Trap ID:** 50

**Automatically notify Support:** No

**User response:**

1. (Trained technician only) Replace microprocessor n (see Removing a microprocessor and heat sink and Replacing a microprocessor and heat sink).
2. If the problem persists and there is no other CPU with the same error indication, replace the system board.
3. (Trained technician only) Replace the system board (see Removing the system board and Installing the system board). (n = microprocessor number)

**816f0113-0302ffff System [ComputerSystemElementName] has recovered from a bus timeout. (CPU 2 PECI)**

**Explanation:** This message is for the use case when an implemenation has detected that a system has recovered from a Bus Timeout.

May also be shown as 816f01130302ffff or 0x816f01130302ffff

**Severity:** Info

**Alert Category:** Critical - Other

**Serviceable:** No

**CIM Information:** **Prefix:** PLAT and **ID:** 0225

**SNMP Trap ID:** 50

**Automatically notify Support:** No

**User response:**

1. (Trained technician only) Replace microprocessor n (see Removing a microprocessor and heat sink and Replacing a microprocessor and heat sink).
2. If the problem persists and there is no other CPU with the same error indication, replace the system board.
3. (Trained technician only) Replace the system board (see Removing the system board and Installing the system board). (n = microprocessor number)

**816f011b-0701ffff The connector [PhysicalConnectorElementName] configuration error has been repaired. (Front USB)**

**Explanation:** This message is for the use case when an implementation has detected an Interconnect Configuration was Repaired.

May also be shown as 816f011b0701ffff or 0x816f011b0701ffff

**Severity:** Info

**Alert Category:** Critical - Other

**Serviceable:** No

**CIM Information:** **Prefix:** PLAT and **ID:** 0267

**SNMP Trap ID:** 50

**Automatically notify Support:** No

**User response:** No action; information only. Front Video :

---

**816f011b-0c01ffff The connector [PhysicalConnectorElementName] configuration error has been repaired. (FP LCD Cable)**

**Explanation:** This message is for the use case when an implementation has detected an Interconnect Configuration was Repaired.

May also be shown as 816f011b0c01ffff or 0x816f011b0c01ffff

**Severity:** Info

**Alert Category:** Critical - Other

**Serviceable:** No

**CIM Information:** **Prefix:** PLAT and **ID:** 0267

**SNMP Trap ID:** 50

**Automatically notify Support:** No

**User response:** No action; information only.

---

**816f0125-0c01ffff [ManagedElementName] detected as present. (Front Panel)**

**Explanation:** This message is for the use case when an implementation has detected a Managed Element is now Present.

May also be shown as 816f01250c01ffff or 0x816f01250c01ffff

**Severity:** Info

**Alert Category:** System - Other

**Serviceable:** No

**CIM Information:** **Prefix:** PLAT and **ID:** 0390

**SNMP Trap ID:**

**Automatically notify Support:** No

**User response:** No action; information only.

**816f0125-1001ffff [ManagedElementName] detected as present. (PCI Riser 1)**

**Explanation:** This message is for the use case when an implementation has detected a Managed Element is now Present.

May also be shown as 816f01251001ffff or 0x816f01251001ffff

**Severity:** Info

**Alert Category:** System - Other

**Serviceable:** No

**CIM Information:** **Prefix:** PLAT and **ID:** 0390

**SNMP Trap ID:**

**Automatically notify Support:** No

**User response:** No action; information only.

**816f0125-1002ffff [ManagedElementName] detected as present. (PCI Riser 2)**

**Explanation:** This message is for the use case when an implementation has detected a Managed Element is now Present.

May also be shown as 816f01251002ffff or 0x816f01251002ffff

**Severity:** Info

**Alert Category:** System - Other

**Serviceable:** No

**CIM Information:** **Prefix:** PLAT and **ID:** 0390

**SNMP Trap ID:**

**Automatically notify Support:** No

**User response:** No action; information only.

**816f0125-100bffff [ManagedElementName] detected as present. (PDB Card)**

**Explanation:** This message is for the use case when an implementation has detected a Managed Element is now Present.

May also be shown as 816f0125100bffff or 0x816f0125100bffff

**Severity:** Info

**Alert Category:** System - Other

**Serviceable:** No

**CIM Information:** **Prefix:** PLAT and **ID:** 0390

**SNMP Trap ID:**

**Automatically notify Support:** No

**User response:** No action; information only.

**816f0125-2c01ffff [ManagedElementName] detected as present. (ML2 Card)**

**Explanation:** This message is for the use case when an implementation has detected a Managed Element is now Present.

May also be shown as 816f01252c01ffff or 0x816f01252c01ffff

**Severity:** Info

**Alert Category:** System - Other

**Serviceable:** No

**CIM Information:** **Prefix:** PLAT and **ID:** 0390

**SNMP Trap ID:**

**Automatically notify Support:** No

**User response:** No action; information only.

---

**816f0207-0301ffff [ProcessorElementName] has Recovered from FRB1/BIST condition. (CPU 1)**

**Explanation:** This message is for the use case when an implementation has detected a Processor Recovered - FRB1/BIST condition.

May also be shown as 816f02070301ffff or 0x816f02070301ffff

**Severity:** Info

**Alert Category:** Critical - CPU

**Serviceable:** No

**CIM Information:** **Prefix:** PLAT and **ID:** 0045

**SNMP Trap ID:** 40

**Automatically notify Support:** No

**User response:** No action; information only.

---

**816f0207-0302ffff [ProcessorElementName] has Recovered from FRB1/BIST condition. (CPU 2)**

**Explanation:** This message is for the use case when an implementation has detected a Processor Recovered - FRB1/BIST condition.

May also be shown as 816f02070302ffff or 0x816f02070302ffff

**Severity:** Info

**Alert Category:** Critical - CPU

**Serviceable:** No

**CIM Information:** **Prefix:** PLAT and **ID:** 0045

**SNMP Trap ID:** 40

**Automatically notify Support:** No

**User response:** No action; information only.

**816f0207-2584ffff [ProcessorElementName] has Recovered from FRB1/BIST condition. (All CPUs)**

**Explanation:** This message is for the use case when an implementation has detected a Processor Recovered - FRB1/BIST condition.

May also be shown as 816f02072584ffff or 0x816f02072584ffff

**Severity:** Info

**Alert Category:** Critical - CPU

**Serviceable:** No

**CIM Information:** **Prefix:** PLAT and **ID:** 0045

**SNMP Trap ID:** 40

**Automatically notify Support:** No

**User response:** No action; information only. One of the CPUs :

**816f020d-0400ffff Failure no longer Predicted on drive [StorageVolumeElementName] for array [ComputerSystemElementName]. (Drive 0)**

**Explanation:** This message is for the use case when an implementation has detected an Array Failure is no longer Predicted.

May also be shown as 816f020d0400ffff or 0x816f020d0400ffff

**Severity:** Info

**Alert Category:** System - Predicted Failure

**Serviceable:** No

**CIM Information:** **Prefix:** PLAT and **ID:** 0169

**SNMP Trap ID:** 27

**Automatically notify Support:** No

**User response:** No action; information only.

**816f020d-0401ffff Failure no longer Predicted on drive [StorageVolumeElementName] for array [ComputerSystemElementName]. (Drive 1)**

**Explanation:** This message is for the use case when an implementation has detected an Array Failure is no longer Predicted.

May also be shown as 816f020d0401ffff or 0x816f020d0401ffff

**Severity:** Info

**Alert Category:** System - Predicted Failure

**Serviceable:** No

**CIM Information:** **Prefix:** PLAT and **ID:** 0169

**SNMP Trap ID:** 27

**Automatically notify Support:** No

**User response:** No action; information only.

**816f020d-0402ffff Failure no longer Predicted on drive [StorageVolumeElementName] for array [ComputerSystemElementName]. (Drive 2)**

**Explanation:** This message is for the use case when an implementation has detected an Array Failure is no longer Predicted.

May also be shown as 816f020d0402ffff or 0x816f020d0402ffff

**Severity:** Info

**Alert Category:** System - Predicted Failure

**Serviceable:** No

**CIM Information:** **Prefix:** PLAT and **ID:** 0169

**SNMP Trap ID:** 27

**Automatically notify Support:** No

**User response:** No action; information only.

---

**816f020d-0403ffff Failure no longer Predicted on drive [StorageVolumeElementName] for array [ComputerSystemElementName]. (Drive 3)**

**Explanation:** This message is for the use case when an implementation has detected an Array Failure is no longer Predicted.

May also be shown as 816f020d0403ffff or 0x816f020d0403ffff

**Severity:** Info

**Alert Category:** System - Predicted Failure

**Serviceable:** No

**CIM Information:** **Prefix:** PLAT and **ID:** 0169

**SNMP Trap ID:** 27

**Automatically notify Support:** No

**User response:** No action; information only.

---

**816f020d-0404ffff Failure no longer Predicted on drive [StorageVolumeElementName] for array [ComputerSystemElementName]. (Drive 4)**

**Explanation:** This message is for the use case when an implementation has detected an Array Failure is no longer Predicted.

May also be shown as 816f020d0404ffff or 0x816f020d0404ffff

**Severity:** Info

**Alert Category:** System - Predicted Failure

**Serviceable:** No

**CIM Information:** **Prefix:** PLAT and **ID:** 0169

**SNMP Trap ID:** 27

**Automatically notify Support:** No

**User response:** No action; information only.

**816f020d-0405ffff Failure no longer Predicted on drive [StorageVolumeElementName] for array [ComputerSystemElementName]. (Drive 5)**

**Explanation:** This message is for the use case when an implementation has detected an Array Failure is no longer Predicted.

May also be shown as 816f020d0405ffff or 0x816f020d0405ffff

**Severity:** Info

**Alert Category:** System - Predicted Failure

**Serviceable:** No

**CIM Information:** **Prefix:** PLAT and **ID:** 0169

**SNMP Trap ID:** 27

**Automatically notify Support:** No

**User response:** No action; information only.

---

**816f020d-0406ffff Failure no longer Predicted on drive [StorageVolumeElementName] for array [ComputerSystemElementName]. (Drive 6)**

**Explanation:** This message is for the use case when an implementation has detected an Array Failure is no longer Predicted.

May also be shown as 816f020d0406ffff or 0x816f020d0406ffff

**Severity:** Info

**Alert Category:** System - Predicted Failure

**Serviceable:** No

**CIM Information:** **Prefix:** PLAT and **ID:** 0169

**SNMP Trap ID:** 27

**Automatically notify Support:** No

**User response:** No action; information only.

---

**816f020d-0407ffff Failure no longer Predicted on drive [StorageVolumeElementName] for array [ComputerSystemElementName]. (Drive 7)**

**Explanation:** This message is for the use case when an implementation has detected an Array Failure is no longer Predicted.

May also be shown as 816f020d0407ffff or 0x816f020d0407ffff

**Severity:** Info

**Alert Category:** System - Predicted Failure

**Serviceable:** No

**CIM Information:** **Prefix:** PLAT and **ID:** 0169

**SNMP Trap ID:** 27

**Automatically notify Support:** No

**User response:** No action; information only.

**816f020d-0408ffff Failure no longer Predicted on drive [StorageVolumeElementName] for array [ComputerSystemElementName]. (Drive 8)**

**Explanation:** This message is for the use case when an implementation has detected an Array Failure is no longer Predicted.

May also be shown as 816f020d0408ffff or 0x816f020d0408ffff

**Severity:** Info

**Alert Category:** System - Predicted Failure

**Serviceable:** No

**CIM Information:** **Prefix:** PLAT and **ID:** 0169

**SNMP Trap ID:** 27

**Automatically notify Support:** No

**User response:** No action; information only.

---

**816f020d-0409ffff Failure no longer Predicted on drive [StorageVolumeElementName] for array [ComputerSystemElementName]. (Drive 9)**

**Explanation:** This message is for the use case when an implementation has detected an Array Failure is no longer Predicted.

May also be shown as 816f020d0409ffff or 0x816f020d0409ffff

**Severity:** Info

**Alert Category:** System - Predicted Failure

**Serviceable:** No

**CIM Information:** **Prefix:** PLAT and **ID:** 0169

**SNMP Trap ID:** 27

**Automatically notify Support:** No

**User response:** No action; information only.

---

**816f020d-040affff Failure no longer Predicted on drive [StorageVolumeElementName] for array [ComputerSystemElementName]. (Drive 10)**

**Explanation:** This message is for the use case when an implementation has detected an Array Failure is no longer Predicted.

May also be shown as 816f020d040affff or 0x816f020d040affff

**Severity:** Info

**Alert Category:** System - Predicted Failure

**Serviceable:** No

**CIM Information:** **Prefix:** PLAT and **ID:** 0169

**SNMP Trap ID:** 27

**Automatically notify Support:** No

**User response:** No action; information only.

**816f020d-040bffff Failure no longer Predicted on drive [StorageVolumeElementName] for array [ComputerSystemElementName]. (Drive 11)**

**Explanation:** This message is for the use case when an implementation has detected an Array Failure is no longer Predicted.

May also be shown as 816f020d040bffff or 0x816f020d040bffff

**Severity:** Info

**Alert Category:** System - Predicted Failure

**Serviceable:** No

**CIM Information:** **Prefix:** PLAT and **ID:** 0169

**SNMP Trap ID:** 27

**Automatically notify Support:** No

**User response:** No action; information only.

---

**816f020d-040cffff Failure no longer Predicted on drive [StorageVolumeElementName] for array [ComputerSystemElementName]. (Drive 12)**

**Explanation:** This message is for the use case when an implementation has detected an Array Failure is no longer Predicted.

May also be shown as 816f020d040cffff or 0x816f020d040cffff

**Severity:** Info

**Alert Category:** System - Predicted Failure

**Serviceable:** No

**CIM Information:** **Prefix:** PLAT and **ID:** 0169

**SNMP Trap ID:** 27

**Automatically notify Support:** No

**User response:** No action; information only.

---

**816f020d-040dffff Failure no longer Predicted on drive [StorageVolumeElementName] for array [ComputerSystemElementName]. (Drive 13)**

**Explanation:** This message is for the use case when an implementation has detected an Array Failure is no longer Predicted.

May also be shown as 816f020d040dffff or 0x816f020d040dffff

**Severity:** Info

**Alert Category:** System - Predicted Failure

**Serviceable:** No

**CIM Information:** **Prefix:** PLAT and **ID:** 0169

**SNMP Trap ID:** 27

**Automatically notify Support:** No

**User response:** No action; information only.

**816f020d-040effff Failure no longer Predicted on drive [StorageVolumeElementName] for array [ComputerSystemElementName]. (Drive 14)**

**Explanation:** This message is for the use case when an implementation has detected an Array Failure is no longer Predicted.

May also be shown as 816f020d040effff or 0x816f020d040effff

**Severity:** Info

**Alert Category:** System - Predicted Failure

**Serviceable:** No

**CIM Information:** **Prefix:** PLAT and **ID:** 0169

**SNMP Trap ID:** 27

**Automatically notify Support:** No

**User response:** No action; information only.

---

**816f020d-040fffff Failure no longer Predicted on drive [StorageVolumeElementName] for array [ComputerSystemElementName]. (Drive 15)**

**Explanation:** This message is for the use case when an implementation has detected an Array Failure is no longer Predicted.

May also be shown as 816f020d040fffff or 0x816f020d040fffff

**Severity:** Info

**Alert Category:** System - Predicted Failure

**Serviceable:** No

**CIM Information:** **Prefix:** PLAT and **ID:** 0169

**SNMP Trap ID:** 27

**Automatically notify Support:** No

**User response:** No action; information only.

---

**816f020d-0410ffff Failure no longer Predicted on drive [StorageVolumeElementName] for array [ComputerSystemElementName]. (Drive 16)**

**Explanation:** This message is for the use case when an implementation has detected an Array Failure is no longer Predicted.

May also be shown as 816f020d0410ffff or 0x816f020d0410ffff

**Severity:** Info

**Alert Category:** System - Predicted Failure

**Serviceable:** No

**CIM Information:** **Prefix:** PLAT and **ID:** 0169

**SNMP Trap ID:** 27

**Automatically notify Support:** No

**User response:** No action; information only.

**816f020d-0411ffff Failure no longer Predicted on drive [StorageVolumeElementName] for array [ComputerSystemElementName]. (Drive 17)**

**Explanation:** This message is for the use case when an implementation has detected an Array Failure is no longer Predicted.

May also be shown as 816f020d0411ffff or 0x816f020d0411ffff

**Severity:** Info

**Alert Category:** System - Predicted Failure

**Serviceable:** No

**CIM Information:** **Prefix:** PLAT and **ID:** 0169

**SNMP Trap ID:** 27

**Automatically notify Support:** No

**User response:** No action; information only.

---

**816f020d-0412ffff Failure no longer Predicted on drive [StorageVolumeElementName] for array [ComputerSystemElementName]. (Drive 18)**

**Explanation:** This message is for the use case when an implementation has detected an Array Failure is no longer Predicted.

May also be shown as 816f020d0412ffff or 0x816f020d0412ffff

**Severity:** Info

**Alert Category:** System - Predicted Failure

**Serviceable:** No

**CIM Information:** **Prefix:** PLAT and **ID:** 0169

**SNMP Trap ID:** 27

**Automatically notify Support:** No

**User response:** No action; information only.

---

**816f020d-0413ffff Failure no longer Predicted on drive [StorageVolumeElementName] for array [ComputerSystemElementName]. (Drive 19)**

**Explanation:** This message is for the use case when an implementation has detected an Array Failure is no longer Predicted.

May also be shown as 816f020d0413ffff or 0x816f020d0413ffff

**Severity:** Info

**Alert Category:** System - Predicted Failure

**Serviceable:** No

**CIM Information:** **Prefix:** PLAT and **ID:** 0169

**SNMP Trap ID:** 27

**Automatically notify Support:** No

**User response:** No action; information only.

**816f020d-0414ffff Failure no longer Predicted on drive [StorageVolumeElementName] for array [ComputerSystemElementName]. (Drive 20)**

**Explanation:** This message is for the use case when an implementation has detected an Array Failure is no longer Predicted.

May also be shown as 816f020d0414ffff or 0x816f020d0414ffff

**Severity:** Info

**Alert Category:** System - Predicted Failure

**Serviceable:** No

**CIM Information:** **Prefix:** PLAT and **ID:** 0169

**SNMP Trap ID:** 27

**Automatically notify Support:** No

**User response:** No action; information only.

---

**816f020d-0415ffff Failure no longer Predicted on drive [StorageVolumeElementName] for array [ComputerSystemElementName]. (Drive 21)**

**Explanation:** This message is for the use case when an implementation has detected an Array Failure is no longer Predicted.

May also be shown as 816f020d0415ffff or 0x816f020d0415ffff

**Severity:** Info

**Alert Category:** System - Predicted Failure

**Serviceable:** No

**CIM Information:** **Prefix:** PLAT and **ID:** 0169

**SNMP Trap ID:** 27

**Automatically notify Support:** No

**User response:** No action; information only.

---

**816f020d-0416ffff Failure no longer Predicted on drive [StorageVolumeElementName] for array [ComputerSystemElementName]. (Drive 22)**

**Explanation:** This message is for the use case when an implementation has detected an Array Failure is no longer Predicted.

May also be shown as 816f020d0416ffff or 0x816f020d0416ffff

**Severity:** Info

**Alert Category:** System - Predicted Failure

**Serviceable:** No

**CIM Information:** **Prefix:** PLAT and **ID:** 0169

**SNMP Trap ID:** 27

**Automatically notify Support:** No

**User response:** No action; information only.

**816f020d-0417ffff Failure no longer Predicted on drive [StorageVolumeElementName] for array [ComputerSystemElementName]. (Drive 23)**

**Explanation:** This message is for the use case when an implementation has detected an Array Failure is no longer Predicted.

May also be shown as 816f020d0417ffff or 0x816f020d0417ffff

**Severity:** Info

**Alert Category:** System - Predicted Failure

**Serviceable:** No

**CIM Information:** **Prefix:** PLAT and **ID:** 0169

**SNMP Trap ID:** 27

**Automatically notify Support:** No

**User response:** No action; information only.

---

**816f020d-0418ffff Failure no longer Predicted on drive [StorageVolumeElementName] for array [ComputerSystemElementName]. (Drive 24)**

**Explanation:** This message is for the use case when an implementation has detected an Array Failure is no longer Predicted.

May also be shown as 816f020d0418ffff or 0x816f020d0418ffff

**Severity:** Info

**Alert Category:** System - Predicted Failure

**Serviceable:** No

**CIM Information:** **Prefix:** PLAT and **ID:** 0169

**SNMP Trap ID:** 27

**Automatically notify Support:** No

**User response:** No action; information only.

---

**816f020d-0419ffff Failure no longer Predicted on drive [StorageVolumeElementName] for array [ComputerSystemElementName]. (Drive 25)**

**Explanation:** This message is for the use case when an implementation has detected an Array Failure is no longer Predicted.

May also be shown as 816f020d0419ffff or 0x816f020d0419ffff

**Severity:** Info

**Alert Category:** System - Predicted Failure

**Serviceable:** No

**CIM Information:** **Prefix:** PLAT and **ID:** 0169

**SNMP Trap ID:** 27

**Automatically notify Support:** No

**User response:** No action; information only.

**816f020d-041affff Failure no longer Predicted on drive [StorageVolumeElementName] for array [ComputerSystemElementName]. (Drive 26)**

**Explanation:** This message is for the use case when an implementation has detected an Array Failure is no longer Predicted.

May also be shown as 816f020d041affff or 0x816f020d041affff

**Severity:** Info

**Alert Category:** System - Predicted Failure

**Serviceable:** No

**CIM Information:** **Prefix:** PLAT and **ID:** 0169

**SNMP Trap ID:** 27

**Automatically notify Support:** No

**User response:** No action; information only.

---

**816f020d-041bffff Failure no longer Predicted on drive [StorageVolumeElementName] for array [ComputerSystemElementName]. (Drive 27)**

**Explanation:** This message is for the use case when an implementation has detected an Array Failure is no longer Predicted.

May also be shown as 816f020d041bffff or 0x816f020d041bffff

**Severity:** Info

**Alert Category:** System - Predicted Failure

**Serviceable:** No

**CIM Information:** **Prefix:** PLAT and **ID:** 0169

**SNMP Trap ID:** 27

**Automatically notify Support:** No

**User response:** No action; information only.

---

**816f020d-041cffff Failure no longer Predicted on drive [StorageVolumeElementName] for array [ComputerSystemElementName]. (Drive 28)**

**Explanation:** This message is for the use case when an implementation has detected an Array Failure is no longer Predicted.

May also be shown as 816f020d041cffff or 0x816f020d041cffff

**Severity:** Info

**Alert Category:** System - Predicted Failure

**Serviceable:** No

**CIM Information:** **Prefix:** PLAT and **ID:** 0169

**SNMP Trap ID:** 27

**Automatically notify Support:** No

**User response:** No action; information only.

**816f020d-041dffff Failure no longer Predicted on drive [StorageVolumeElementName] for array [ComputerSystemElementName]. (Drive 29)**

**Explanation:** This message is for the use case when an implementation has detected an Array Failure is no longer Predicted.

May also be shown as 816f020d041dffff or 0x816f020d041dffff

**Severity:** Info

**Alert Category:** System - Predicted Failure

**Serviceable:** No

**CIM Information:** **Prefix:** PLAT and **ID:** 0169

**SNMP Trap ID:** 27

**Automatically notify Support:** No

**User response:** No action; information only.

---

**816f020d-041effff Failure no longer Predicted on drive [StorageVolumeElementName] for array [ComputerSystemElementName]. (Drive 30)**

**Explanation:** This message is for the use case when an implementation has detected an Array Failure is no longer Predicted.

May also be shown as 816f020d041effff or 0x816f020d041effff

**Severity:** Info

**Alert Category:** System - Predicted Failure

**Serviceable:** No

**CIM Information:** **Prefix:** PLAT and **ID:** 0169

**SNMP Trap ID:** 27

**Automatically notify Support:** No

**User response:** No action; information only.

---

**816f020d-041fffff Failure no longer Predicted on drive [StorageVolumeElementName] for array [ComputerSystemElementName]. (Drive 31)**

**Explanation:** This message is for the use case when an implementation has detected an Array Failure is no longer Predicted.

May also be shown as 816f020d041fffff or 0x816f020d041fffff

**Severity:** Info

**Alert Category:** System - Predicted Failure

**Serviceable:** No

**CIM Information:** **Prefix:** PLAT and **ID:** 0169

**SNMP Trap ID:** 27

**Automatically notify Support:** No

**User response:** No action; information only.

**816f0308-0a01ffff [PowerSupplyElementName] has returned to a Normal Input State. (Power Supply 1)**

**Explanation:** This message is for the use case when an implementation has detected a Power Supply that has input that has returned to normal.

May also be shown as 816f03080a01ffff or 0x816f03080a01ffff

**Severity:** Info

**Alert Category:** System - Other

**Serviceable:** No

**CIM Information:** **Prefix:** PLAT and **ID:** 0099

**SNMP Trap ID:**

**Automatically notify Support:** No

**User response:** No action; information only.

---

**816f0308-0a02ffff [PowerSupplyElementName] has returned to a Normal Input State. (Power Supply 2)**

**Explanation:** This message is for the use case when an implementation has detected a Power Supply that has input that has returned to normal.

May also be shown as 816f03080a02ffff or 0x816f03080a02ffff

**Severity:** Info

**Alert Category:** System - Other

**Serviceable:** No

**CIM Information:** **Prefix:** PLAT and **ID:** 0099

**SNMP Trap ID:**

**Automatically notify Support:** No

**User response:** No action; information only.

---

**816f030c-2001ffff Scrub Failure for [PhysicalMemoryElementName] on Subsystem [MemoryElementName]has recovered. (DIMM 1)**

**Explanation:** This message is for the use case when an implementation has detected a Memory Scrub failure recovery.

May also be shown as 816f030c2001ffff or 0x816f030c2001ffff

**Severity:** Info

**Alert Category:** Critical - Memory

**Serviceable:** No

**CIM Information:** **Prefix:** PLAT and **ID:** 0137

**SNMP Trap ID:** 41

**Automatically notify Support:** No

**User response:** No action; information only.

**816f030c-2002ffff Scrub Failure for [PhysicalMemoryElementName] on Subsystem [MemoryElementName]has recovered. (DIMM 2)**

**Explanation:** This message is for the use case when an implementation has detected a Memory Scrub failure recovery.

May also be shown as 816f030c2002ffff or 0x816f030c2002ffff

**Severity:** Info

**Alert Category:** Critical - Memory

**Serviceable:** No

**CIM Information:** **Prefix:** PLAT and **ID:** 0137

**SNMP Trap ID:** 41

**Automatically notify Support:** No

**User response:** No action; information only.

**816f030c-2003ffff Scrub Failure for [PhysicalMemoryElementName] on Subsystem [MemoryElementName]has recovered. (DIMM 3)**

**Explanation:** This message is for the use case when an implementation has detected a Memory Scrub failure recovery.

May also be shown as 816f030c2003ffff or 0x816f030c2003ffff

**Severity:** Info

**Alert Category:** Critical - Memory

**Serviceable:** No

**CIM Information:** **Prefix:** PLAT and **ID:** 0137

**SNMP Trap ID:** 41

**Automatically notify Support:** No

**User response:** No action; information only.

**816f030c-2004ffff Scrub Failure for [PhysicalMemoryElementName] on Subsystem [MemoryElementName]has recovered. (DIMM 4)**

**Explanation:** This message is for the use case when an implementation has detected a Memory Scrub failure recovery.

May also be shown as 816f030c2004ffff or 0x816f030c2004ffff

**Severity:** Info

**Alert Category:** Critical - Memory

**Serviceable:** No

**CIM Information:** **Prefix:** PLAT and **ID:** 0137

**SNMP Trap ID:** 41

**Automatically notify Support:** No

**User response:** No action; information only.

**816f030c-2005ffff Scrub Failure for [PhysicalMemoryElementName] on Subsystem [MemoryElementName]has recovered. (DIMM 5)**

**Explanation:** This message is for the use case when an implementation has detected a Memory Scrub failure recovery.

May also be shown as 816f030c2005ffff or 0x816f030c2005ffff

**Severity:** Info

**Alert Category:** Critical - Memory

**Serviceable:** No

**CIM Information:** **Prefix:** PLAT and **ID:** 0137

**SNMP Trap ID:** 41

**Automatically notify Support:** No

**User response:** No action; information only.

---

**816f030c-2006ffff Scrub Failure for [PhysicalMemoryElementName] on Subsystem [MemoryElementName]has recovered. (DIMM 6)**

**Explanation:** This message is for the use case when an implementation has detected a Memory Scrub failure recovery.

May also be shown as 816f030c2006ffff or 0x816f030c2006ffff

**Severity:** Info

**Alert Category:** Critical - Memory

**Serviceable:** No

**CIM Information:** **Prefix:** PLAT and **ID:** 0137

**SNMP Trap ID:** 41

**Automatically notify Support:** No

**User response:** No action; information only.

---

**816f030c-2007ffff Scrub Failure for [PhysicalMemoryElementName] on Subsystem [MemoryElementName]has recovered. (DIMM 7)**

**Explanation:** This message is for the use case when an implementation has detected a Memory Scrub failure recovery.

May also be shown as 816f030c2007ffff or 0x816f030c2007ffff

**Severity:** Info

**Alert Category:** Critical - Memory

**Serviceable:** No

**CIM Information:** **Prefix:** PLAT and **ID:** 0137

**SNMP Trap ID:** 41

**Automatically notify Support:** No

**User response:** No action; information only.

**816f030c-2008ffff Scrub Failure for [PhysicalMemoryElementName] on Subsystem [MemoryElementName]has recovered. (DIMM 8)**

**Explanation:** This message is for the use case when an implementation has detected a Memory Scrub failure recovery.

May also be shown as 816f030c2008ffff or 0x816f030c2008ffff

**Severity:** Info

**Alert Category:** Critical - Memory

**Serviceable:** No

**CIM Information:** **Prefix:** PLAT and **ID:** 0137

**SNMP Trap ID:** 41

**Automatically notify Support:** No

**User response:** No action; information only.

---

**816f030c-2009ffff Scrub Failure for [PhysicalMemoryElementName] on Subsystem [MemoryElementName]has recovered. (DIMM 9)**

**Explanation:** This message is for the use case when an implementation has detected a Memory Scrub failure recovery.

May also be shown as 816f030c2009ffff or 0x816f030c2009ffff

**Severity:** Info

**Alert Category:** Critical - Memory

**Serviceable:** No

**CIM Information:** **Prefix:** PLAT and **ID:** 0137

**SNMP Trap ID:** 41

**Automatically notify Support:** No

**User response:** No action; information only.

---

**816f030c-200affff Scrub Failure for [PhysicalMemoryElementName] on Subsystem [MemoryElementName]has recovered. (DIMM 10)**

**Explanation:** This message is for the use case when an implementation has detected a Memory Scrub failure recovery.

May also be shown as 816f030c200affff or 0x816f030c200affff

**Severity:** Info

**Alert Category:** Critical - Memory

**Serviceable:** No

**CIM Information:** **Prefix:** PLAT and **ID:** 0137

**SNMP Trap ID:** 41

**Automatically notify Support:** No

**User response:** No action; information only.

**816f030c-200bffff Scrub Failure for [PhysicalMemoryElementName] on Subsystem [MemoryElementName]has recovered. (DIMM 11)**

**Explanation:** This message is for the use case when an implementation has detected a Memory Scrub failure recovery.

May also be shown as 816f030c200bffff or 0x816f030c200bffff

**Severity:** Info

**Alert Category:** Critical - Memory

**Serviceable:** No

**CIM Information:** **Prefix:** PLAT and **ID:** 0137

**SNMP Trap ID:** 41

**Automatically notify Support:** No

**User response:** No action; information only.

---

**816f030c-200cffff Scrub Failure for [PhysicalMemoryElementName] on Subsystem [MemoryElementName]has recovered. (DIMM 12)**

**Explanation:** This message is for the use case when an implementation has detected a Memory Scrub failure recovery.

May also be shown as 816f030c200cffff or 0x816f030c200cffff

**Severity:** Info

**Alert Category:** Critical - Memory

**Serviceable:** No

**CIM Information:** **Prefix:** PLAT and **ID:** 0137

**SNMP Trap ID:** 41

**Automatically notify Support:** No

**User response:** No action; information only.

---

**816f030c-200dffff Scrub Failure for [PhysicalMemoryElementName] on Subsystem [MemoryElementName]has recovered. (DIMM 13)**

**Explanation:** This message is for the use case when an implementation has detected a Memory Scrub failure recovery.

May also be shown as 816f030c200dffff or 0x816f030c200dffff

**Severity:** Info

**Alert Category:** Critical - Memory

**Serviceable:** No

**CIM Information:** **Prefix:** PLAT and **ID:** 0137

**SNMP Trap ID:** 41

**Automatically notify Support:** No

**User response:** No action; information only.

**816f030c-200effff Scrub Failure for [PhysicalMemoryElementName] on Subsystem [MemoryElementName]has recovered. (DIMM 14)**

**Explanation:** This message is for the use case when an implementation has detected a Memory Scrub failure recovery.

May also be shown as 816f030c200effff or 0x816f030c200effff

**Severity:** Info

**Alert Category:** Critical - Memory

**Serviceable:** No

**CIM Information:** **Prefix:** PLAT and **ID:** 0137

**SNMP Trap ID:** 41

**Automatically notify Support:** No

**User response:** No action; information only.

---

**816f030c-200fffff Scrub Failure for [PhysicalMemoryElementName] on Subsystem [MemoryElementName]has recovered. (DIMM 15)**

**Explanation:** This message is for the use case when an implementation has detected a Memory Scrub failure recovery.

May also be shown as 816f030c200fffff or 0x816f030c200fffff

**Severity:** Info

**Alert Category:** Critical - Memory

**Serviceable:** No

**CIM Information:** **Prefix:** PLAT and **ID:** 0137

**SNMP Trap ID:** 41

**Automatically notify Support:** No

**User response:** No action; information only.

---

**816f030c-2010ffff Scrub Failure for [PhysicalMemoryElementName] on Subsystem [MemoryElementName]has recovered. (DIMM 16)**

**Explanation:** This message is for the use case when an implementation has detected a Memory Scrub failure recovery.

May also be shown as 816f030c2010ffff or 0x816f030c2010ffff

**Severity:** Info

**Alert Category:** Critical - Memory

**Serviceable:** No

**CIM Information:** **Prefix:** PLAT and **ID:** 0137

**SNMP Trap ID:** 41

**Automatically notify Support:** No

**User response:** No action; information only.

**816f030c-2011ffff Scrub Failure for [PhysicalMemoryElementName] on Subsystem [MemoryElementName]has recovered. (DIMM 17)**

**Explanation:** This message is for the use case when an implementation has detected a Memory Scrub failure recovery.

May also be shown as 816f030c2011ffff or 0x816f030c2011ffff

**Severity:** Info

**Alert Category:** Critical - Memory

**Serviceable:** No

**CIM Information:** **Prefix:** PLAT and **ID:** 0137

**SNMP Trap ID:** 41

**Automatically notify Support:** No

**User response:** No action; information only.

---

**816f030c-2012ffff Scrub Failure for [PhysicalMemoryElementName] on Subsystem [MemoryElementName]has recovered. (DIMM 18)**

**Explanation:** This message is for the use case when an implementation has detected a Memory Scrub failure recovery.

May also be shown as 816f030c2012ffff or 0x816f030c2012ffff

**Severity:** Info

**Alert Category:** Critical - Memory

**Serviceable:** No

**CIM Information:** **Prefix:** PLAT and **ID:** 0137

**SNMP Trap ID:** 41

**Automatically notify Support:** No

**User response:** No action; information only.

---

**816f030c-2013ffff Scrub Failure for [PhysicalMemoryElementName] on Subsystem [MemoryElementName]has recovered. (DIMM 19)**

**Explanation:** This message is for the use case when an implementation has detected a Memory Scrub failure recovery.

May also be shown as 816f030c2013ffff or 0x816f030c2013ffff

**Severity:** Info

**Alert Category:** Critical - Memory

**Serviceable:** No

**CIM Information:** **Prefix:** PLAT and **ID:** 0137

**SNMP Trap ID:** 41

**Automatically notify Support:** No

**User response:** No action; information only.

**816f030c-2014ffff Scrub Failure for [PhysicalMemoryElementName] on Subsystem [MemoryElementName]has recovered. (DIMM 20)**

**Explanation:** This message is for the use case when an implementation has detected a Memory Scrub failure recovery.

May also be shown as 816f030c2014ffff or 0x816f030c2014ffff

**Severity:** Info

**Alert Category:** Critical - Memory

**Serviceable:** No

**CIM Information:** **Prefix:** PLAT and **ID:** 0137

**SNMP Trap ID:** 41

**Automatically notify Support:** No

**User response:** No action; information only.

---

**816f030c-2015ffff Scrub Failure for [PhysicalMemoryElementName] on Subsystem [MemoryElementName]has recovered. (DIMM 21)**

**Explanation:** This message is for the use case when an implementation has detected a Memory Scrub failure recovery.

May also be shown as 816f030c2015ffff or 0x816f030c2015ffff

**Severity:** Info

**Alert Category:** Critical - Memory

**Serviceable:** No

**CIM Information:** **Prefix:** PLAT and **ID:** 0137

**SNMP Trap ID:** 41

**Automatically notify Support:** No

**User response:** No action; information only.

---

**816f030c-2016ffff Scrub Failure for [PhysicalMemoryElementName] on Subsystem [MemoryElementName]has recovered. (DIMM 22)**

**Explanation:** This message is for the use case when an implementation has detected a Memory Scrub failure recovery.

May also be shown as 816f030c2016ffff or 0x816f030c2016ffff

**Severity:** Info

**Alert Category:** Critical - Memory

**Serviceable:** No

**CIM Information:** **Prefix:** PLAT and **ID:** 0137

**SNMP Trap ID:** 41

**Automatically notify Support:** No

**User response:** No action; information only.

**816f030c-2017ffff Scrub Failure for [PhysicalMemoryElementName] on Subsystem [MemoryElementName]has recovered. (DIMM 23)**

**Explanation:** This message is for the use case when an implementation has detected a Memory Scrub failure recovery.

May also be shown as 816f030c2017ffff or 0x816f030c2017ffff

**Severity:** Info

**Alert Category:** Critical - Memory

**Serviceable:** No

**CIM Information:** **Prefix:** PLAT and **ID:** 0137

**SNMP Trap ID:** 41

**Automatically notify Support:** No

**User response:** No action; information only.

---

**816f030c-2018ffff Scrub Failure for [PhysicalMemoryElementName] on Subsystem [MemoryElementName]has recovered. (DIMM 24)**

**Explanation:** This message is for the use case when an implementation has detected a Memory Scrub failure recovery.

May also be shown as 816f030c2018ffff or 0x816f030c2018ffff

**Severity:** Info

**Alert Category:** Critical - Memory

**Serviceable:** No

**CIM Information:** **Prefix:** PLAT and **ID:** 0137

**SNMP Trap ID:** 41

**Automatically notify Support:** No

**User response:** No action; information only.

---

**816f030d-0400ffff Hot spare disabled for [ComputerSystemElementName]. (Drive 0)**

**Explanation:** This message is for the use case when an implementation has detected a Hot Spare has been Disabled.

May also be shown as 816f030d0400ffff or 0x816f030d0400ffff

**Severity:** Info

**Alert Category:** System - Other

**Serviceable:** No

**CIM Information:** **Prefix:** PLAT and **ID:** 0171

**SNMP Trap ID:**

**Automatically notify Support:** No

**User response:** No action; information only.

**816f030d-0401ffff Hot spare disabled for [ComputerSystemElementName]. (Drive 1)**

**Explanation:** This message is for the use case when an implementation has detected a Hot Spare has been Disabled. May also be shown as 816f030d0401ffff or 0x816f030d0401ffff

**Severity:** Info

**Alert Category:** System - Other

**Serviceable:** No

**CIM Information:** **Prefix:** PLAT and **ID:** 0171

**SNMP Trap ID:**

**Automatically notify Support:** No

**User response:** No action; information only.

---

**816f030d-0402ffff Hot spare disabled for [ComputerSystemElementName]. (Drive 2)**

**Explanation:** This message is for the use case when an implementation has detected a Hot Spare has been Disabled. May also be shown as 816f030d0402ffff or 0x816f030d0402ffff

**Severity:** Info

**Alert Category:** System - Other

**Serviceable:** No

**CIM Information:** **Prefix:** PLAT and **ID:** 0171

**SNMP Trap ID:**

**Automatically notify Support:** No

**User response:** No action; information only.

---

**816f030d-0403ffff Hot spare disabled for [ComputerSystemElementName]. (Drive 3)**

**Explanation:** This message is for the use case when an implementation has detected a Hot Spare has been Disabled. May also be shown as 816f030d0403ffff or 0x816f030d0403ffff

**Severity:** Info

**Alert Category:** System - Other

**Serviceable:** No

**CIM Information:** **Prefix:** PLAT and **ID:** 0171

**SNMP Trap ID:**

**Automatically notify Support:** No

**User response:** No action; information only.

**816f030d-0404ffff Hot spare disabled for [ComputerSystemElementName]. (Drive 4)**

**Explanation:** This message is for the use case when an implementation has detected a Hot Spare has been Disabled. May also be shown as 816f030d0404ffff or 0x816f030d0404ffff

**Severity:** Info

**Alert Category:** System - Other

**Serviceable:** No

**CIM Information:** **Prefix:** PLAT and **ID:** 0171

**SNMP Trap ID:**

**Automatically notify Support:** No

**User response:** No action; information only.

---

**816f030d-0405ffff Hot spare disabled for [ComputerSystemElementName]. (Drive 5)**

**Explanation:** This message is for the use case when an implementation has detected a Hot Spare has been Disabled. May also be shown as 816f030d0405ffff or 0x816f030d0405ffff

**Severity:** Info

**Alert Category:** System - Other

**Serviceable:** No

**CIM Information:** **Prefix:** PLAT and **ID:** 0171

**SNMP Trap ID:**

**Automatically notify Support:** No

**User response:** No action; information only.

---

**816f030d-0406ffff Hot spare disabled for [ComputerSystemElementName]. (Drive 6)**

**Explanation:** This message is for the use case when an implementation has detected a Hot Spare has been Disabled. May also be shown as 816f030d0406ffff or 0x816f030d0406ffff

**Severity:** Info

**Alert Category:** System - Other

**Serviceable:** No

**CIM Information:** **Prefix:** PLAT and **ID:** 0171

**SNMP Trap ID:**

**Automatically notify Support:** No

**User response:** No action; information only.

**816f030d-0407ffff Hot spare disabled for [ComputerSystemElementName]. (Drive 7)**

**Explanation:** This message is for the use case when an implementation has detected a Hot Spare has been Disabled.

May also be shown as 816f030d0407ffff or 0x816f030d0407ffff

**Severity:** Info

**Alert Category:** System - Other

**Serviceable:** No

**CIM Information:** **Prefix:** PLAT and **ID:** 0171

**SNMP Trap ID:**

**Automatically notify Support:** No

**User response:** No action; information only.

---

**816f030d-0408ffff Hot spare disabled for [ComputerSystemElementName]. (Drive 8)**

**Explanation:** This message is for the use case when an implementation has detected a Hot Spare has been Disabled.

May also be shown as 816f030d0408ffff or 0x816f030d0408ffff

**Severity:** Info

**Alert Category:** System - Other

**Serviceable:** No

**CIM Information:** **Prefix:** PLAT and **ID:** 0171

**SNMP Trap ID:**

**Automatically notify Support:** No

**User response:** No action; information only.

---

**816f030d-0409ffff Hot spare disabled for [ComputerSystemElementName]. (Drive 9)**

**Explanation:** This message is for the use case when an implementation has detected a Hot Spare has been Disabled.

May also be shown as 816f030d0409ffff or 0x816f030d0409ffff

**Severity:** Info

**Alert Category:** System - Other

**Serviceable:** No

**CIM Information:** **Prefix:** PLAT and **ID:** 0171

**SNMP Trap ID:**

**Automatically notify Support:** No

**User response:** No action; information only.

**816f030d-040affff Hot spare disabled for [ComputerSystemElementName]. (Drive 10)**

**Explanation:** This message is for the use case when an implementation has detected a Hot Spare has been Disabled. May also be shown as 816f030d040affff or 0x816f030d040affff

**Severity:** Info

**Alert Category:** System - Other

**Serviceable:** No

**CIM Information:** **Prefix:** PLAT and **ID:** 0171

**SNMP Trap ID:**

**Automatically notify Support:** No

**User response:** No action; information only.

---

**816f030d-040bffff Hot spare disabled for [ComputerSystemElementName]. (Drive 11)**

**Explanation:** This message is for the use case when an implementation has detected a Hot Spare has been Disabled. May also be shown as 816f030d040bffff or 0x816f030d040bffff

**Severity:** Info

**Alert Category:** System - Other

**Serviceable:** No

**CIM Information:** **Prefix:** PLAT and **ID:** 0171

**SNMP Trap ID:**

**Automatically notify Support:** No

**User response:** No action; information only.

---

**816f030d-040cffff Hot spare disabled for [ComputerSystemElementName]. (Drive 12)**

**Explanation:** This message is for the use case when an implementation has detected a Hot Spare has been Disabled. May also be shown as 816f030d040cffff or 0x816f030d040cffff

**Severity:** Info

**Alert Category:** System - Other

**Serviceable:** No

**CIM Information:** **Prefix:** PLAT and **ID:** 0171

**SNMP Trap ID:**

**Automatically notify Support:** No

**User response:** No action; information only.

**816f030d-040dffff Hot spare disabled for [ComputerSystemElementName]. (Drive 13)**

**Explanation:** This message is for the use case when an implementation has detected a Hot Spare has been Disabled.

May also be shown as 816f030d040dffff or 0x816f030d040dffff

**Severity:** Info

**Alert Category:** System - Other

**Serviceable:** No

**CIM Information:** **Prefix:** PLAT and **ID:** 0171

**SNMP Trap ID:**

**Automatically notify Support:** No

**User response:** No action; information only.

---

**816f030d-040effff Hot spare disabled for [ComputerSystemElementName]. (Drive 14)**

**Explanation:** This message is for the use case when an implementation has detected a Hot Spare has been Disabled.

May also be shown as 816f030d040effff or 0x816f030d040effff

**Severity:** Info

**Alert Category:** System - Other

**Serviceable:** No

**CIM Information:** **Prefix:** PLAT and **ID:** 0171

**SNMP Trap ID:**

**Automatically notify Support:** No

**User response:** No action; information only.

---

**816f030d-040fffff Hot spare disabled for [ComputerSystemElementName]. (Drive 15)**

**Explanation:** This message is for the use case when an implementation has detected a Hot Spare has been Disabled.

May also be shown as 816f030d040fffff or 0x816f030d040fffff

**Severity:** Info

**Alert Category:** System - Other

**Serviceable:** No

**CIM Information:** **Prefix:** PLAT and **ID:** 0171

**SNMP Trap ID:**

**Automatically notify Support:** No

**User response:** No action; information only.

**816f030d-0410ffff Hot spare disabled for [ComputerSystemElementName]. (Drive 16)**

**Explanation:** This message is for the use case when an implementation has detected a Hot Spare has been Disabled. May also be shown as 816f030d0410ffff or 0x816f030d0410ffff

**Severity:** Info

**Alert Category:** System - Other

**Serviceable:** No

**CIM Information:** **Prefix:** PLAT and **ID:** 0171

**SNMP Trap ID:**

**Automatically notify Support:** No

**User response:** No action; information only.

---

**816f030d-0411ffff Hot spare disabled for [ComputerSystemElementName]. (Drive 17)**

**Explanation:** This message is for the use case when an implementation has detected a Hot Spare has been Disabled. May also be shown as 816f030d0411ffff or 0x816f030d0411ffff

**Severity:** Info

**Alert Category:** System - Other

**Serviceable:** No

**CIM Information:** **Prefix:** PLAT and **ID:** 0171

**SNMP Trap ID:**

**Automatically notify Support:** No

**User response:** No action; information only.

---

**816f030d-0412ffff Hot spare disabled for [ComputerSystemElementName]. (Drive 18)**

**Explanation:** This message is for the use case when an implementation has detected a Hot Spare has been Disabled. May also be shown as 816f030d0412ffff or 0x816f030d0412ffff

**Severity:** Info

**Alert Category:** System - Other

**Serviceable:** No

**CIM Information:** **Prefix:** PLAT and **ID:** 0171

**SNMP Trap ID:**

**Automatically notify Support:** No

**User response:** No action; information only.

**816f030d-0413ffff Hot spare disabled for [ComputerSystemElementName]. (Drive 19)**

**Explanation:** This message is for the use case when an implementation has detected a Hot Spare has been Disabled. May also be shown as 816f030d0413ffff or 0x816f030d0413ffff

**Severity:** Info

**Alert Category:** System - Other

**Serviceable:** No

**CIM Information:** **Prefix:** PLAT and **ID:** 0171

**SNMP Trap ID:**

**Automatically notify Support:** No

**User response:** No action; information only.

---

**816f030d-0414ffff Hot spare disabled for [ComputerSystemElementName]. (Drive 20)**

**Explanation:** This message is for the use case when an implementation has detected a Hot Spare has been Disabled. May also be shown as 816f030d0414ffff or 0x816f030d0414ffff

**Severity:** Info

**Alert Category:** System - Other

**Serviceable:** No

**CIM Information:** **Prefix:** PLAT and **ID:** 0171

**SNMP Trap ID:**

**Automatically notify Support:** No

**User response:** No action; information only.

---

**816f030d-0415ffff Hot spare disabled for [ComputerSystemElementName]. (Drive 21)**

**Explanation:** This message is for the use case when an implementation has detected a Hot Spare has been Disabled. May also be shown as 816f030d0415ffff or 0x816f030d0415ffff

**Severity:** Info

**Alert Category:** System - Other

**Serviceable:** No

**CIM Information:** **Prefix:** PLAT and **ID:** 0171

**SNMP Trap ID:**

**Automatically notify Support:** No

**User response:** No action; information only.

**816f030d-0416ffff Hot spare disabled for [ComputerSystemElementName]. (Drive 22)**

**Explanation:** This message is for the use case when an implementation has detected a Hot Spare has been Disabled. May also be shown as 816f030d0416ffff or 0x816f030d0416ffff

**Severity:** Info

**Alert Category:** System - Other

**Serviceable:** No

**CIM Information:** **Prefix:** PLAT and **ID:** 0171

**SNMP Trap ID:**

**Automatically notify Support:** No

**User response:** No action; information only.

---

**816f030d-0417ffff Hot spare disabled for [ComputerSystemElementName]. (Drive 23)**

**Explanation:** This message is for the use case when an implementation has detected a Hot Spare has been Disabled. May also be shown as 816f030d0417ffff or 0x816f030d0417ffff

**Severity:** Info

**Alert Category:** System - Other

**Serviceable:** No

**CIM Information:** **Prefix:** PLAT and **ID:** 0171

**SNMP Trap ID:**

**Automatically notify Support:** No

**User response:** No action; information only.

---

**816f030d-0418ffff Hot spare disabled for [ComputerSystemElementName]. (Drive 24)**

**Explanation:** This message is for the use case when an implementation has detected a Hot Spare has been Disabled. May also be shown as 816f030d0418ffff or 0x816f030d0418ffff

**Severity:** Info

**Alert Category:** System - Other

**Serviceable:** No

**CIM Information:** **Prefix:** PLAT and **ID:** 0171

**SNMP Trap ID:**

**Automatically notify Support:** No

**User response:** No action; information only.

**816f030d-0419ffff Hot spare disabled for [ComputerSystemElementName]. (Drive 25)**

**Explanation:** This message is for the use case when an implementation has detected a Hot Spare has been Disabled.

May also be shown as 816f030d0419ffff or 0x816f030d0419ffff

**Severity:** Info

**Alert Category:** System - Other

**Serviceable:** No

**CIM Information:** **Prefix:** PLAT and **ID:** 0171

**SNMP Trap ID:**

**Automatically notify Support:** No

**User response:** No action; information only.

---

**816f030d-041affff Hot spare disabled for [ComputerSystemElementName]. (Drive 26)**

**Explanation:** This message is for the use case when an implementation has detected a Hot Spare has been Disabled.

May also be shown as 816f030d041affff or 0x816f030d041affff

**Severity:** Info

**Alert Category:** System - Other

**Serviceable:** No

**CIM Information:** **Prefix:** PLAT and **ID:** 0171

**SNMP Trap ID:**

**Automatically notify Support:** No

**User response:** No action; information only.

---

**816f030d-041bffff Hot spare disabled for [ComputerSystemElementName]. (Drive 27)**

**Explanation:** This message is for the use case when an implementation has detected a Hot Spare has been Disabled.

May also be shown as 816f030d041bffff or 0x816f030d041bffff

**Severity:** Info

**Alert Category:** System - Other

**Serviceable:** No

**CIM Information:** **Prefix:** PLAT and **ID:** 0171

**SNMP Trap ID:**

**Automatically notify Support:** No

**User response:** No action; information only.

**816f030d-041cffff Hot spare disabled for [ComputerSystemElementName]. (Drive 28)**

**Explanation:** This message is for the use case when an implementation has detected a Hot Spare has been Disabled. May also be shown as 816f030d041cffff or 0x816f030d041cffff

**Severity:** Info

**Alert Category:** System - Other

**Serviceable:** No

**CIM Information:** **Prefix:** PLAT and **ID:** 0171

**SNMP Trap ID:**

**Automatically notify Support:** No

**User response:** No action; information only.

---

**816f030d-041dffff Hot spare disabled for [ComputerSystemElementName]. (Drive 29)**

**Explanation:** This message is for the use case when an implementation has detected a Hot Spare has been Disabled. May also be shown as 816f030d041dffff or 0x816f030d041dffff

**Severity:** Info

**Alert Category:** System - Other

**Serviceable:** No

**CIM Information:** **Prefix:** PLAT and **ID:** 0171

**SNMP Trap ID:**

**Automatically notify Support:** No

**User response:** No action; information only.

---

**816f030d-041effff Hot spare disabled for [ComputerSystemElementName]. (Drive 30)**

**Explanation:** This message is for the use case when an implementation has detected a Hot Spare has been Disabled. May also be shown as 816f030d041effff or 0x816f030d041effff

**Severity:** Info

**Alert Category:** System - Other

**Serviceable:** No

**CIM Information:** **Prefix:** PLAT and **ID:** 0171

**SNMP Trap ID:**

**Automatically notify Support:** No

**User response:** No action; information only.

**816f030d-041fffff Hot spare disabled for [ComputerSystemElementName]. (Drive 31)**

**Explanation:** This message is for the use case when an implementation has detected a Hot Spare has been Disabled.

May also be shown as 816f030d041fffff or 0x816f030d041fffff

**Severity:** Info

**Alert Category:** System - Other

**Serviceable:** No

**CIM Information:** **Prefix:** PLAT and **ID:** 0171

**SNMP Trap ID:**

**Automatically notify Support:** No

**User response:** No action; information only.

---

**816f0313-1701ffff System [ComputerSystemElementName] has recovered from an NMI. (NMI State)**

**Explanation:** This message is for the use case when an implementation has detected a Software NMI has been Recovered from.

May also be shown as 816f03131701ffff or 0x816f03131701ffff

**Severity:** Info

**Alert Category:** Critical - Other

**Serviceable:** No

**CIM Information:** **Prefix:** PLAT and **ID:** 0230

**SNMP Trap ID:** 50

**Automatically notify Support:** No

**User response:** No action; information only.

---

**816f040c-2001ffff [PhysicalMemoryElementName] Enabled on Subsystem [MemoryElementName]. (DIMM 1)**

**Explanation:** This message is for the use case when an implementation has detected that Memory has been Enabled.

May also be shown as 816f040c2001ffff or 0x816f040c2001ffff

**Severity:** Info

**Alert Category:** System - Other

**Serviceable:** No

**CIM Information:** **Prefix:** PLAT and **ID:** 0130

**SNMP Trap ID:**

**Automatically notify Support:** No

**User response:** No action; information only.

**816f040c-2002ffff [PhysicalMemoryElementName] Enabled on Subsystem [MemoryElementName]. (DIMM 2)**

**Explanation:** This message is for the use case when an implementation has detected that Memory has been Enabled. May also be shown as 816f040c2002ffff or 0x816f040c2002ffff

**Severity:** Info

**Alert Category:** System - Other

**Serviceable:** No

**CIM Information:** **Prefix:** PLAT and **ID:** 0130

**SNMP Trap ID:**

**Automatically notify Support:** No

**User response:** No action; information only.

---

**816f040c-2003ffff [PhysicalMemoryElementName] Enabled on Subsystem [MemoryElementName]. (DIMM 3)**

**Explanation:** This message is for the use case when an implementation has detected that Memory has been Enabled. May also be shown as 816f040c2003ffff or 0x816f040c2003ffff

**Severity:** Info

**Alert Category:** System - Other

**Serviceable:** No

**CIM Information:** **Prefix:** PLAT and **ID:** 0130

**SNMP Trap ID:**

**Automatically notify Support:** No

**User response:** No action; information only.

---

**816f040c-2004ffff [PhysicalMemoryElementName] Enabled on Subsystem [MemoryElementName]. (DIMM 4)**

**Explanation:** This message is for the use case when an implementation has detected that Memory has been Enabled. May also be shown as 816f040c2004ffff or 0x816f040c2004ffff

**Severity:** Info

**Alert Category:** System - Other

**Serviceable:** No

**CIM Information:** **Prefix:** PLAT and **ID:** 0130

**SNMP Trap ID:**

**Automatically notify Support:** No

**User response:** No action; information only.

**816f040c-2005ffff [PhysicalMemoryElementName] Enabled on Subsystem [MemoryElementName]. (DIMM 5)**

**Explanation:** This message is for the use case when an implementation has detected that Memory has been Enabled. May also be shown as 816f040c2005ffff or 0x816f040c2005ffff

**Severity:** Info

**Alert Category:** System - Other

**Serviceable:** No

**CIM Information:** **Prefix:** PLAT and **ID:** 0130

**SNMP Trap ID:**

**Automatically notify Support:** No

**User response:** No action; information only.

---

**816f040c-2006ffff [PhysicalMemoryElementName] Enabled on Subsystem [MemoryElementName]. (DIMM 6)**

**Explanation:** This message is for the use case when an implementation has detected that Memory has been Enabled. May also be shown as 816f040c2006ffff or 0x816f040c2006ffff

**Severity:** Info

**Alert Category:** System - Other

**Serviceable:** No

**CIM Information:** **Prefix:** PLAT and **ID:** 0130

**SNMP Trap ID:**

**Automatically notify Support:** No

**User response:** No action; information only.

---

**816f040c-2007ffff [PhysicalMemoryElementName] Enabled on Subsystem [MemoryElementName]. (DIMM 7)**

**Explanation:** This message is for the use case when an implementation has detected that Memory has been Enabled. May also be shown as 816f040c2007ffff or 0x816f040c2007ffff

**Severity:** Info

**Alert Category:** System - Other

**Serviceable:** No

**CIM Information:** **Prefix:** PLAT and **ID:** 0130

**SNMP Trap ID:**

**Automatically notify Support:** No

**User response:** No action; information only.

**816f040c-2008ffff [PhysicalMemoryElementName] Enabled on Subsystem [MemoryElementName]. (DIMM 8)**

**Explanation:** This message is for the use case when an implementation has detected that Memory has been Enabled. May also be shown as 816f040c2008ffff or 0x816f040c2008ffff

**Severity:** Info

**Alert Category:** System - Other

**Serviceable:** No

**CIM Information:** **Prefix:** PLAT and **ID:** 0130

**SNMP Trap ID:**

**Automatically notify Support:** No

**User response:** No action; information only.

---

**816f040c-2009ffff [PhysicalMemoryElementName] Enabled on Subsystem [MemoryElementName]. (DIMM 9)**

**Explanation:** This message is for the use case when an implementation has detected that Memory has been Enabled. May also be shown as 816f040c2009ffff or 0x816f040c2009ffff

**Severity:** Info

**Alert Category:** System - Other

**Serviceable:** No

**CIM Information:** **Prefix:** PLAT and **ID:** 0130

**SNMP Trap ID:**

**Automatically notify Support:** No

**User response:** No action; information only.

---

**816f040c-200affff [PhysicalMemoryElementName] Enabled on Subsystem [MemoryElementName]. (DIMM 10)**

**Explanation:** This message is for the use case when an implementation has detected that Memory has been Enabled. May also be shown as 816f040c200affff or 0x816f040c200affff

**Severity:** Info

**Alert Category:** System - Other

**Serviceable:** No

**CIM Information:** **Prefix:** PLAT and **ID:** 0130

**SNMP Trap ID:**

**Automatically notify Support:** No

**User response:** No action; information only.

**816f040c-200bffff [PhysicalMemoryElementName] Enabled on Subsystem [MemoryElementName]. (DIMM 11)**

**Explanation:** This message is for the use case when an implementation has detected that Memory has been Enabled. May also be shown as 816f040c200bffff or 0x816f040c200bffff

**Severity:** Info

**Alert Category:** System - Other

**Serviceable:** No

**CIM Information:** **Prefix:** PLAT and **ID:** 0130

**SNMP Trap ID:**

**Automatically notify Support:** No

**User response:** No action; information only.

---

**816f040c-200cffff [PhysicalMemoryElementName] Enabled on Subsystem [MemoryElementName]. (DIMM 12)**

**Explanation:** This message is for the use case when an implementation has detected that Memory has been Enabled. May also be shown as 816f040c200cffff or 0x816f040c200cffff

**Severity:** Info

**Alert Category:** System - Other

**Serviceable:** No

**CIM Information:** **Prefix:** PLAT and **ID:** 0130

**SNMP Trap ID:**

**Automatically notify Support:** No

**User response:** No action; information only.

---

**816f040c-200dffff [PhysicalMemoryElementName] Enabled on Subsystem [MemoryElementName]. (DIMM 13)**

**Explanation:** This message is for the use case when an implementation has detected that Memory has been Enabled. May also be shown as 816f040c200dffff or 0x816f040c200dffff

**Severity:** Info

**Alert Category:** System - Other

**Serviceable:** No

**CIM Information:** **Prefix:** PLAT and **ID:** 0130

**SNMP Trap ID:**

**Automatically notify Support:** No

**User response:** No action; information only.

**816f040c-200effff [PhysicalMemoryElementName] Enabled on Subsystem [MemoryElementName]. (DIMM 14)**

**Explanation:** This message is for the use case when an implementation has detected that Memory has been Enabled. May also be shown as 816f040c200effff or 0x816f040c200effff

**Severity:** Info

**Alert Category:** System - Other

**Serviceable:** No

**CIM Information:** **Prefix:** PLAT and **ID:** 0130

**SNMP Trap ID:**

**Automatically notify Support:** No

**User response:** No action; information only.

---

**816f040c-200fffff [PhysicalMemoryElementName] Enabled on Subsystem [MemoryElementName]. (DIMM 15)**

**Explanation:** This message is for the use case when an implementation has detected that Memory has been Enabled. May also be shown as 816f040c200fffff or 0x816f040c200fffff

**Severity:** Info

**Alert Category:** System - Other

**Serviceable:** No

**CIM Information:** **Prefix:** PLAT and **ID:** 0130

**SNMP Trap ID:**

**Automatically notify Support:** No

**User response:** No action; information only.

---

**816f040c-2010ffff [PhysicalMemoryElementName] Enabled on Subsystem [MemoryElementName]. (DIMM 16)**

**Explanation:** This message is for the use case when an implementation has detected that Memory has been Enabled. May also be shown as 816f040c2010ffff or 0x816f040c2010ffff

**Severity:** Info

**Alert Category:** System - Other

**Serviceable:** No

**CIM Information:** **Prefix:** PLAT and **ID:** 0130

**SNMP Trap ID:**

**Automatically notify Support:** No

**User response:** No action; information only.

**816f040c-2011ffff [PhysicalMemoryElementName] Enabled on Subsystem [MemoryElementName]. (DIMM 17)**

**Explanation:** This message is for the use case when an implementation has detected that Memory has been Enabled. May also be shown as 816f040c2011ffff or 0x816f040c2011ffff

**Severity:** Info

**Alert Category:** System - Other

**Serviceable:** No

**CIM Information:** **Prefix:** PLAT and **ID:** 0130

**SNMP Trap ID:**

**Automatically notify Support:** No

**User response:** No action; information only.

---

**816f040c-2012ffff [PhysicalMemoryElementName] Enabled on Subsystem [MemoryElementName]. (DIMM 18)**

**Explanation:** This message is for the use case when an implementation has detected that Memory has been Enabled. May also be shown as 816f040c2012ffff or 0x816f040c2012ffff

**Severity:** Info

**Alert Category:** System - Other

**Serviceable:** No

**CIM Information:** **Prefix:** PLAT and **ID:** 0130

**SNMP Trap ID:**

**Automatically notify Support:** No

**User response:** No action; information only.

---

**816f040c-2013ffff [PhysicalMemoryElementName] Enabled on Subsystem [MemoryElementName]. (DIMM 19)**

**Explanation:** This message is for the use case when an implementation has detected that Memory has been Enabled. May also be shown as 816f040c2013ffff or 0x816f040c2013ffff

**Severity:** Info

**Alert Category:** System - Other

**Serviceable:** No

**CIM Information:** **Prefix:** PLAT and **ID:** 0130

**SNMP Trap ID:**

**Automatically notify Support:** No

**User response:** No action; information only.

**816f040c-2014ffff [PhysicalMemoryElementName] Enabled on Subsystem [MemoryElementName]. (DIMM 20)**

**Explanation:** This message is for the use case when an implementation has detected that Memory has been Enabled. May also be shown as 816f040c2014ffff or 0x816f040c2014ffff

**Severity:** Info

**Alert Category:** System - Other

**Serviceable:** No

**CIM Information:** **Prefix:** PLAT and **ID:** 0130

**SNMP Trap ID:**

**Automatically notify Support:** No

**User response:** No action; information only.

---

**816f040c-2015ffff [PhysicalMemoryElementName] Enabled on Subsystem [MemoryElementName]. (DIMM 21)**

**Explanation:** This message is for the use case when an implementation has detected that Memory has been Enabled. May also be shown as 816f040c2015ffff or 0x816f040c2015ffff

**Severity:** Info

**Alert Category:** System - Other

**Serviceable:** No

**CIM Information:** **Prefix:** PLAT and **ID:** 0130

**SNMP Trap ID:**

**Automatically notify Support:** No

**User response:** No action; information only.

---

**816f040c-2016ffff [PhysicalMemoryElementName] Enabled on Subsystem [MemoryElementName]. (DIMM 22)**

**Explanation:** This message is for the use case when an implementation has detected that Memory has been Enabled. May also be shown as 816f040c2016ffff or 0x816f040c2016ffff

**Severity:** Info

**Alert Category:** System - Other

**Serviceable:** No

**CIM Information:** **Prefix:** PLAT and **ID:** 0130

**SNMP Trap ID:**

**Automatically notify Support:** No

**User response:** No action; information only.

**816f040c-2017ffff [PhysicalMemoryElementName] Enabled on Subsystem [MemoryElementName]. (DIMM 23)**

**Explanation:** This message is for the use case when an implementation has detected that Memory has been Enabled. May also be shown as 816f040c2017ffff or 0x816f040c2017ffff

**Severity:** Info

**Alert Category:** System - Other

**Serviceable:** No

**CIM Information:** **Prefix:** PLAT and **ID:** 0130

**SNMP Trap ID:**

**Automatically notify Support:** No

**User response:** No action; information only.

---

**816f040c-2018ffff [PhysicalMemoryElementName] Enabled on Subsystem [MemoryElementName]. (DIMM 24)**

**Explanation:** This message is for the use case when an implementation has detected that Memory has been Enabled. May also be shown as 816f040c2018ffff or 0x816f040c2018ffff

**Severity:** Info

**Alert Category:** System - Other

**Serviceable:** No

**CIM Information:** **Prefix:** PLAT and **ID:** 0130

**SNMP Trap ID:**

**Automatically notify Support:** No

**User response:** No action; information only.

---

**816f040c-2581ffff [PhysicalMemoryElementName] Enabled on Subsystem [MemoryElementName]. (All DIMMS)**

**Explanation:** This message is for the use case when an implementation has detected that Memory has been Enabled. May also be shown as 816f040c2581ffff or 0x816f040c2581ffff

**Severity:** Info

**Alert Category:** System - Other

**Serviceable:** No

**CIM Information:** **Prefix:** PLAT and **ID:** 0130

**SNMP Trap ID:**

**Automatically notify Support:** No

**User response:** No action; information only. One of the DIMMs :

**816f0413-2582ffff A PCI PERR recovery has occurred on system [ComputerSystemElementName]. (PCIs)**

**Explanation:** This message is for the use case when an implementation has detected a PCI PERR recovered.

May also be shown as 816f04132582ffff or 0x816f04132582ffff

**Severity:** Info

**Alert Category:** Critical - Other

**Serviceable:** No

**CIM Information:** **Prefix:** PLAT and **ID:** 0233

**SNMP Trap ID:** 50

**Automatically notify Support:** No

**User response:** No action; information only.

---

**816f0507-0301ffff [ProcessorElementName] has Recovered from a Configuration Mismatch. (CPU 1)**

**Explanation:** This message is for the use case when an implementation has Recovered from a Processor Configuration Mismatch.

May also be shown as 816f05070301ffff or 0x816f05070301ffff

**Severity:** Info

**Alert Category:** Critical - CPU

**Serviceable:** No

**CIM Information:** **Prefix:** PLAT and **ID:** 0063

**SNMP Trap ID:** 40

**Automatically notify Support:** No

**User response:** No action; information only.

---

**816f0507-0302ffff [ProcessorElementName] has Recovered from a Configuration Mismatch. (CPU 2)**

**Explanation:** This message is for the use case when an implementation has Recovered from a Processor Configuration Mismatch.

May also be shown as 816f05070302ffff or 0x816f05070302ffff

**Severity:** Info

**Alert Category:** Critical - CPU

**Serviceable:** No

**CIM Information:** **Prefix:** PLAT and **ID:** 0063

**SNMP Trap ID:** 40

**Automatically notify Support:** No

**User response:** No action; information only.

**816f0507-2584ffff [ProcessorElementName] has Recovered from a Configuration Mismatch. (All CPUs)**

**Explanation:** This message is for the use case when an implementation has Recovered from a Processor Configuration Mismatch.

May also be shown as 816f05072584ffff or 0x816f05072584ffff

**Severity:** Info

**Alert Category:** Critical - CPU

**Serviceable:** No

**CIM Information:** **Prefix:** PLAT and **ID:** 0063

**SNMP Trap ID:** 40

**Automatically notify Support:** No

**User response:** No action; information only. One of the CPUs :

**816f050c-2001ffff Memory Logging Limit Removed for [PhysicalMemoryElementName] on Subsystem [MemoryElementName]. (DIMM 1)**

**Explanation:** This message is for the use case when an implementation has detected that the Memory Logging Limit has been Removed.

May also be shown as 816f050c2001ffff or 0x816f050c2001ffff

**Severity:** Info

**Alert Category:** Warning - Memory

**Serviceable:** No

**CIM Information:** **Prefix:** PLAT and **ID:** 0145

**SNMP Trap ID:** 43

**Automatically notify Support:** No

**User response:** No action; information only.

**816f050c-2002ffff Memory Logging Limit Removed for [PhysicalMemoryElementName] on Subsystem [MemoryElementName]. (DIMM 2)**

**Explanation:** This message is for the use case when an implementation has detected that the Memory Logging Limit has been Removed.

May also be shown as 816f050c2002ffff or 0x816f050c2002ffff

**Severity:** Info

**Alert Category:** Warning - Memory

**Serviceable:** No

**CIM Information:** **Prefix:** PLAT and **ID:** 0145

**SNMP Trap ID:** 43

**Automatically notify Support:** No

**User response:** No action; information only.

**816f050c-2003ffff Memory Logging Limit Removed for [PhysicalMemoryElementName] on Subsystem [MemoryElementName]. (DIMM 3)**

**Explanation:** This message is for the use case when an implementation has detected that the Memory Logging Limit has been Removed.

May also be shown as 816f050c2003ffff or 0x816f050c2003ffff

**Severity:** Info

**Alert Category:** Warning - Memory

**Serviceable:** No

**CIM Information:** **Prefix:** PLAT and **ID:** 0145

**SNMP Trap ID:** 43

**Automatically notify Support:** No

**User response:** No action; information only.

---

**816f050c-2004ffff Memory Logging Limit Removed for [PhysicalMemoryElementName] on Subsystem [MemoryElementName]. (DIMM 4)**

**Explanation:** This message is for the use case when an implementation has detected that the Memory Logging Limit has been Removed.

May also be shown as 816f050c2004ffff or 0x816f050c2004ffff

**Severity:** Info

**Alert Category:** Warning - Memory

**Serviceable:** No

**CIM Information:** **Prefix:** PLAT and **ID:** 0145

**SNMP Trap ID:** 43

**Automatically notify Support:** No

**User response:** No action; information only.

---

**816f050c-2005ffff Memory Logging Limit Removed for [PhysicalMemoryElementName] on Subsystem [MemoryElementName]. (DIMM 5)**

**Explanation:** This message is for the use case when an implementation has detected that the Memory Logging Limit has been Removed.

May also be shown as 816f050c2005ffff or 0x816f050c2005ffff

**Severity:** Info

**Alert Category:** Warning - Memory

**Serviceable:** No

**CIM Information:** **Prefix:** PLAT and **ID:** 0145

**SNMP Trap ID:** 43

**Automatically notify Support:** No

**User response:** No action; information only.

**816f050c-2006ffff Memory Logging Limit Removed for [PhysicalMemoryElementName] on Subsystem [MemoryElementName]. (DIMM 6)**

**Explanation:** This message is for the use case when an implementation has detected that the Memory Logging Limit has been Removed.

May also be shown as 816f050c2006ffff or 0x816f050c2006ffff

**Severity:** Info

**Alert Category:** Warning - Memory

**Serviceable:** No

**CIM Information:** **Prefix:** PLAT and **ID:** 0145

**SNMP Trap ID:** 43

**Automatically notify Support:** No

**User response:** No action; information only.

---

**816f050c-2007ffff Memory Logging Limit Removed for [PhysicalMemoryElementName] on Subsystem [MemoryElementName]. (DIMM 7)**

**Explanation:** This message is for the use case when an implementation has detected that the Memory Logging Limit has been Removed.

May also be shown as 816f050c2007ffff or 0x816f050c2007ffff

**Severity:** Info

**Alert Category:** Warning - Memory

**Serviceable:** No

**CIM Information:** **Prefix:** PLAT and **ID:** 0145

**SNMP Trap ID:** 43

**Automatically notify Support:** No

**User response:** No action; information only.

---

**816f050c-2008ffff Memory Logging Limit Removed for [PhysicalMemoryElementName] on Subsystem [MemoryElementName]. (DIMM 8)**

**Explanation:** This message is for the use case when an implementation has detected that the Memory Logging Limit has been Removed.

May also be shown as 816f050c2008ffff or 0x816f050c2008ffff

**Severity:** Info

**Alert Category:** Warning - Memory

**Serviceable:** No

**CIM Information:** **Prefix:** PLAT and **ID:** 0145

**SNMP Trap ID:** 43

**Automatically notify Support:** No

**User response:** No action; information only.

**816f050c-2009ffff Memory Logging Limit Removed for [PhysicalMemoryElementName] on Subsystem [MemoryElementName]. (DIMM 9)**

**Explanation:** This message is for the use case when an implementation has detected that the Memory Logging Limit has been Removed.

May also be shown as 816f050c2009ffff or 0x816f050c2009ffff

**Severity:** Info

**Alert Category:** Warning - Memory

**Serviceable:** No

**CIM Information:** **Prefix:** PLAT and **ID:** 0145

**SNMP Trap ID:** 43

**Automatically notify Support:** No

**User response:** No action; information only.

---

**816f050c-200affff Memory Logging Limit Removed for [PhysicalMemoryElementName] on Subsystem [MemoryElementName]. (DIMM 10)**

**Explanation:** This message is for the use case when an implementation has detected that the Memory Logging Limit has been Removed.

May also be shown as 816f050c200affff or 0x816f050c200affff

**Severity:** Info

**Alert Category:** Warning - Memory

**Serviceable:** No

**CIM Information:** **Prefix:** PLAT and **ID:** 0145

**SNMP Trap ID:** 43

**Automatically notify Support:** No

**User response:** No action; information only.

---

**816f050c-200bffff Memory Logging Limit Removed for [PhysicalMemoryElementName] on Subsystem [MemoryElementName]. (DIMM 11)**

**Explanation:** This message is for the use case when an implementation has detected that the Memory Logging Limit has been Removed.

May also be shown as 816f050c200bffff or 0x816f050c200bffff

**Severity:** Info

**Alert Category:** Warning - Memory

**Serviceable:** No

**CIM Information:** **Prefix:** PLAT and **ID:** 0145

**SNMP Trap ID:** 43

**Automatically notify Support:** No

**User response:** No action; information only.

**816f050c-200cffff Memory Logging Limit Removed for [PhysicalMemoryElementName] on Subsystem [MemoryElementName]. (DIMM 12)**

**Explanation:** This message is for the use case when an implementation has detected that the Memory Logging Limit has been Removed.

May also be shown as 816f050c200cffff or 0x816f050c200cffff

**Severity:** Info

**Alert Category:** Warning - Memory

**Serviceable:** No

**CIM Information:** **Prefix:** PLAT and **ID:** 0145

**SNMP Trap ID:** 43

**Automatically notify Support:** No

**User response:** No action; information only.

---

**816f050c-200dffff Memory Logging Limit Removed for [PhysicalMemoryElementName] on Subsystem [MemoryElementName]. (DIMM 13)**

**Explanation:** This message is for the use case when an implementation has detected that the Memory Logging Limit has been Removed.

May also be shown as 816f050c200dffff or 0x816f050c200dffff

**Severity:** Info

**Alert Category:** Warning - Memory

**Serviceable:** No

**CIM Information:** **Prefix:** PLAT and **ID:** 0145

**SNMP Trap ID:** 43

**Automatically notify Support:** No

**User response:** No action; information only.

---

**816f050c-200effff Memory Logging Limit Removed for [PhysicalMemoryElementName] on Subsystem [MemoryElementName]. (DIMM 14)**

**Explanation:** This message is for the use case when an implementation has detected that the Memory Logging Limit has been Removed.

May also be shown as 816f050c200effff or 0x816f050c200effff

**Severity:** Info

**Alert Category:** Warning - Memory

**Serviceable:** No

**CIM Information:** **Prefix:** PLAT and **ID:** 0145

**SNMP Trap ID:** 43

**Automatically notify Support:** No

**User response:** No action; information only.

**816f050c-200fffff Memory Logging Limit Removed for [PhysicalMemoryElementName] on Subsystem [MemoryElementName]. (DIMM 15)**

**Explanation:** This message is for the use case when an implementation has detected that the Memory Logging Limit has been Removed.

May also be shown as 816f050c200fffff or 0x816f050c200fffff

**Severity:** Info

**Alert Category:** Warning - Memory

**Serviceable:** No

**CIM Information:** **Prefix:** PLAT and **ID:** 0145

**SNMP Trap ID:** 43

**Automatically notify Support:** No

**User response:** No action; information only.

---

**816f050c-2010ffff Memory Logging Limit Removed for [PhysicalMemoryElementName] on Subsystem [MemoryElementName]. (DIMM 16)**

**Explanation:** This message is for the use case when an implementation has detected that the Memory Logging Limit has been Removed.

May also be shown as 816f050c2010ffff or 0x816f050c2010ffff

**Severity:** Info

**Alert Category:** Warning - Memory

**Serviceable:** No

**CIM Information:** **Prefix:** PLAT and **ID:** 0145

**SNMP Trap ID:** 43

**Automatically notify Support:** No

**User response:** No action; information only.

---

**816f050c-2011ffff Memory Logging Limit Removed for [PhysicalMemoryElementName] on Subsystem [MemoryElementName]. (DIMM 17)**

**Explanation:** This message is for the use case when an implementation has detected that the Memory Logging Limit has been Removed.

May also be shown as 816f050c2011ffff or 0x816f050c2011ffff

**Severity:** Info

**Alert Category:** Warning - Memory

**Serviceable:** No

**CIM Information:** **Prefix:** PLAT and **ID:** 0145

**SNMP Trap ID:** 43

**Automatically notify Support:** No

**User response:** No action; information only.

**816f050c-2012ffff Memory Logging Limit Removed for [PhysicalMemoryElementName] on Subsystem [MemoryElementName]. (DIMM 18)**

**Explanation:** This message is for the use case when an implementation has detected that the Memory Logging Limit has been Removed.

May also be shown as 816f050c2012ffff or 0x816f050c2012ffff

**Severity:** Info

**Alert Category:** Warning - Memory

**Serviceable:** No

**CIM Information:** **Prefix:** PLAT and **ID:** 0145

**SNMP Trap ID:** 43

**Automatically notify Support:** No

**User response:** No action; information only.

---

**816f050c-2013ffff Memory Logging Limit Removed for [PhysicalMemoryElementName] on Subsystem [MemoryElementName]. (DIMM 19)**

**Explanation:** This message is for the use case when an implementation has detected that the Memory Logging Limit has been Removed.

May also be shown as 816f050c2013ffff or 0x816f050c2013ffff

**Severity:** Info

**Alert Category:** Warning - Memory

**Serviceable:** No

**CIM Information:** **Prefix:** PLAT and **ID:** 0145

**SNMP Trap ID:** 43

**Automatically notify Support:** No

**User response:** No action; information only.

---

**816f050c-2014ffff Memory Logging Limit Removed for [PhysicalMemoryElementName] on Subsystem [MemoryElementName]. (DIMM 20)**

**Explanation:** This message is for the use case when an implementation has detected that the Memory Logging Limit has been Removed.

May also be shown as 816f050c2014ffff or 0x816f050c2014ffff

**Severity:** Info

**Alert Category:** Warning - Memory

**Serviceable:** No

**CIM Information:** **Prefix:** PLAT and **ID:** 0145

**SNMP Trap ID:** 43

**Automatically notify Support:** No

**User response:** No action; information only.

**816f050c-2015ffff Memory Logging Limit Removed for [PhysicalMemoryElementName] on Subsystem [MemoryElementName]. (DIMM 21)**

**Explanation:** This message is for the use case when an implementation has detected that the Memory Logging Limit has been Removed.

May also be shown as 816f050c2015ffff or 0x816f050c2015ffff

**Severity:** Info

**Alert Category:** Warning - Memory

**Serviceable:** No

**CIM Information:** **Prefix:** PLAT and **ID:** 0145

**SNMP Trap ID:** 43

**Automatically notify Support:** No

**User response:** No action; information only.

---

**816f050c-2016ffff Memory Logging Limit Removed for [PhysicalMemoryElementName] on Subsystem [MemoryElementName]. (DIMM 22)**

**Explanation:** This message is for the use case when an implementation has detected that the Memory Logging Limit has been Removed.

May also be shown as 816f050c2016ffff or 0x816f050c2016ffff

**Severity:** Info

**Alert Category:** Warning - Memory

**Serviceable:** No

**CIM Information:** **Prefix:** PLAT and **ID:** 0145

**SNMP Trap ID:** 43

**Automatically notify Support:** No

**User response:** No action; information only.

---

**816f050c-2017ffff Memory Logging Limit Removed for [PhysicalMemoryElementName] on Subsystem [MemoryElementName]. (DIMM 23)**

**Explanation:** This message is for the use case when an implementation has detected that the Memory Logging Limit has been Removed.

May also be shown as 816f050c2017ffff or 0x816f050c2017ffff

**Severity:** Info

**Alert Category:** Warning - Memory

**Serviceable:** No

**CIM Information:** **Prefix:** PLAT and **ID:** 0145

**SNMP Trap ID:** 43

**Automatically notify Support:** No

**User response:** No action; information only.

**816f050c-2018ffff Memory Logging Limit Removed for [PhysicalMemoryElementName] on Subsystem [MemoryElementName]. (DIMM 24)**

**Explanation:** This message is for the use case when an implementation has detected that the Memory Logging Limit has been Removed.

May also be shown as 816f050c2018ffff or 0x816f050c2018ffff

**Severity:** Info

**Alert Category:** Warning - Memory

**Serviceable:** No

**CIM Information:** **Prefix:** PLAT and **ID:** 0145

**SNMP Trap ID:** 43

**Automatically notify Support:** No

**User response:** No action; information only.

---

**816f050c-2581ffff Memory Logging Limit Removed for [PhysicalMemoryElementName] on Subsystem [MemoryElementName]. (All DIMMS)**

**Explanation:** This message is for the use case when an implementation has detected that the Memory Logging Limit has been Removed.

May also be shown as 816f050c2581ffff or 0x816f050c2581ffff

**Severity:** Info

**Alert Category:** Warning - Memory

**Serviceable:** No

**CIM Information:** **Prefix:** PLAT and **ID:** 0145

**SNMP Trap ID:** 43

**Automatically notify Support:** No

**User response:** No action; information only. One of the DIMMs :

---

**816f050d-0400ffff Critical Array [ComputerSystemElementName] has deasserted. (Drive 0)**

**Explanation:** This message is for the use case when an implementation has detected that an Critiacal Array has deasserted.

May also be shown as 816f050d0400ffff or 0x816f050d0400ffff

**Severity:** Info

**Alert Category:** Critical - Hard Disk drive

**Serviceable:** No

**CIM Information:** **Prefix:** PLAT and **ID:** 0175

**SNMP Trap ID:** 5

**Automatically notify Support:** No

**User response:** No action; information only.

**816f050d-0401ffff Critical Array [ComputerSystemElementName] has deasserted. (Drive 1)**

**Explanation:** This message is for the use case when an implementation has detected that an Critiacal Array has deasserted.

May also be shown as 816f050d0401ffff or 0x816f050d0401ffff

**Severity:** Info

**Alert Category:** Critical - Hard Disk drive

**Serviceable:** No

**CIM Information:** **Prefix:** PLAT and **ID:** 0175

**SNMP Trap ID:** 5

**Automatically notify Support:** No

**User response:** No action; information only.

---

**816f050d-0402ffff Critical Array [ComputerSystemElementName] has deasserted. (Drive 2)**

**Explanation:** This message is for the use case when an implementation has detected that an Critiacal Array has deasserted.

May also be shown as 816f050d0402ffff or 0x816f050d0402ffff

**Severity:** Info

**Alert Category:** Critical - Hard Disk drive

**Serviceable:** No

**CIM Information:** **Prefix:** PLAT and **ID:** 0175

**SNMP Trap ID:** 5

**Automatically notify Support:** No

**User response:** No action; information only.

---

**816f050d-0403ffff Critical Array [ComputerSystemElementName] has deasserted. (Drive 3)**

**Explanation:** This message is for the use case when an implementation has detected that an Critiacal Array has deasserted.

May also be shown as 816f050d0403ffff or 0x816f050d0403ffff

**Severity:** Info

**Alert Category:** Critical - Hard Disk drive

**Serviceable:** No

**CIM Information:** **Prefix:** PLAT and **ID:** 0175

**SNMP Trap ID:** 5

**Automatically notify Support:** No

**User response:** No action; information only.

**816f050d-0404ffff Critical Array [ComputerSystemElementName] has deasserted. (Drive 4)**

**Explanation:** This message is for the use case when an implementation has detected that an Critiacal Array has deasserted.

May also be shown as 816f050d0404ffff or 0x816f050d0404ffff

**Severity:** Info

**Alert Category:** Critical - Hard Disk drive

**Serviceable:** No

**CIM Information:** **Prefix:** PLAT and **ID:** 0175

**SNMP Trap ID:** 5

**Automatically notify Support:** No

**User response:** No action; information only.

---

**816f050d-0405ffff Critical Array [ComputerSystemElementName] has deasserted. (Drive 5)**

**Explanation:** This message is for the use case when an implementation has detected that an Critiacal Array has deasserted.

May also be shown as 816f050d0405ffff or 0x816f050d0405ffff

**Severity:** Info

**Alert Category:** Critical - Hard Disk drive

**Serviceable:** No

**CIM Information:** **Prefix:** PLAT and **ID:** 0175

**SNMP Trap ID:** 5

**Automatically notify Support:** No

**User response:** No action; information only.

---

**816f050d-0406ffff Critical Array [ComputerSystemElementName] has deasserted. (Drive 6)**

**Explanation:** This message is for the use case when an implementation has detected that an Critiacal Array has deasserted.

May also be shown as 816f050d0406ffff or 0x816f050d0406ffff

**Severity:** Info

**Alert Category:** Critical - Hard Disk drive

**Serviceable:** No

**CIM Information:** **Prefix:** PLAT and **ID:** 0175

**SNMP Trap ID:** 5

**Automatically notify Support:** No

**User response:** No action; information only.

**816f050d-0407ffff Critical Array [ComputerSystemElementName] has deasserted. (Drive 7)**

**Explanation:** This message is for the use case when an implementation has detected that an Critiacal Array has deasserted.

May also be shown as 816f050d0407ffff or 0x816f050d0407ffff

**Severity:** Info

**Alert Category:** Critical - Hard Disk drive

**Serviceable:** No

**CIM Information:** **Prefix:** PLAT and **ID:** 0175

**SNMP Trap ID:** 5

**Automatically notify Support:** No

**User response:** No action; information only.

---

**816f050d-0408ffff Critical Array [ComputerSystemElementName] has deasserted. (Drive 8)**

**Explanation:** This message is for the use case when an implementation has detected that an Critiacal Array has deasserted.

May also be shown as 816f050d0408ffff or 0x816f050d0408ffff

**Severity:** Info

**Alert Category:** Critical - Hard Disk drive

**Serviceable:** No

**CIM Information:** **Prefix:** PLAT and **ID:** 0175

**SNMP Trap ID:** 5

**Automatically notify Support:** No

**User response:** No action; information only.

---

**816f050d-0409ffff Critical Array [ComputerSystemElementName] has deasserted. (Drive 9)**

**Explanation:** This message is for the use case when an implementation has detected that an Critiacal Array has deasserted.

May also be shown as 816f050d0409ffff or 0x816f050d0409ffff

**Severity:** Info

**Alert Category:** Critical - Hard Disk drive

**Serviceable:** No

**CIM Information:** **Prefix:** PLAT and **ID:** 0175

**SNMP Trap ID:** 5

**Automatically notify Support:** No

**User response:** No action; information only.

**816f050d-040affff Critical Array [ComputerSystemElementName] has deasserted. (Drive 10)**

**Explanation:** This message is for the use case when an implementation has detected that an Critiacal Array has deasserted.

May also be shown as 816f050d040affff or 0x816f050d040affff

**Severity:** Info

**Alert Category:** Critical - Hard Disk drive

**Serviceable:** No

**CIM Information:** **Prefix:** PLAT and **ID:** 0175

**SNMP Trap ID:** 5

**Automatically notify Support:** No

**User response:** No action; information only.

---

**816f050d-040bffff Critical Array [ComputerSystemElementName] has deasserted. (Drive 11)**

**Explanation:** This message is for the use case when an implementation has detected that an Critiacal Array has deasserted.

May also be shown as 816f050d040bffff or 0x816f050d040bffff

**Severity:** Info

**Alert Category:** Critical - Hard Disk drive

**Serviceable:** No

**CIM Information:** **Prefix:** PLAT and **ID:** 0175

**SNMP Trap ID:** 5

**Automatically notify Support:** No

**User response:** No action; information only.

---

**816f050d-040cffff Critical Array [ComputerSystemElementName] has deasserted. (Drive 12)**

**Explanation:** This message is for the use case when an implementation has detected that an Critiacal Array has deasserted.

May also be shown as 816f050d040cffff or 0x816f050d040cffff

**Severity:** Info

**Alert Category:** Critical - Hard Disk drive

**Serviceable:** No

**CIM Information:** **Prefix:** PLAT and **ID:** 0175

**SNMP Trap ID:** 5

**Automatically notify Support:** No

**User response:** No action; information only.

**816f050d-040dffff Critical Array [ComputerSystemElementName] has deasserted. (Drive 13)**

**Explanation:** This message is for the use case when an implementation has detected that an Critiacal Array has deasserted.

May also be shown as 816f050d040dffff or 0x816f050d040dffff

**Severity:** Info

**Alert Category:** Critical - Hard Disk drive

**Serviceable:** No

**CIM Information:** **Prefix:** PLAT and **ID:** 0175

**SNMP Trap ID:** 5

**Automatically notify Support:** No

**User response:** No action; information only.

---

**816f050d-040effff Critical Array [ComputerSystemElementName] has deasserted. (Drive 14)**

**Explanation:** This message is for the use case when an implementation has detected that an Critiacal Array has deasserted.

May also be shown as 816f050d040effff or 0x816f050d040effff

**Severity:** Info

**Alert Category:** Critical - Hard Disk drive

**Serviceable:** No

**CIM Information:** **Prefix:** PLAT and **ID:** 0175

**SNMP Trap ID:** 5

**Automatically notify Support:** No

**User response:** No action; information only.

---

**816f050d-040fffff Critical Array [ComputerSystemElementName] has deasserted. (Drive 15)**

**Explanation:** This message is for the use case when an implementation has detected that an Critiacal Array has deasserted.

May also be shown as 816f050d040fffff or 0x816f050d040fffff

**Severity:** Info

**Alert Category:** Critical - Hard Disk drive

**Serviceable:** No

**CIM Information:** **Prefix:** PLAT and **ID:** 0175

**SNMP Trap ID:** 5

**Automatically notify Support:** No

**User response:** No action; information only.

**816f050d-0410ffff Critical Array [ComputerSystemElementName] has deasserted. (Drive 16)**

**Explanation:** This message is for the use case when an implementation has detected that an Critiacal Array has deasserted.

May also be shown as 816f050d0410ffff or 0x816f050d0410ffff

**Severity:** Info

**Alert Category:** Critical - Hard Disk drive

**Serviceable:** No

**CIM Information:** **Prefix:** PLAT and **ID:** 0175

**SNMP Trap ID:** 5

**Automatically notify Support:** No

**User response:** No action; information only.

---

**816f050d-0411ffff Critical Array [ComputerSystemElementName] has deasserted. (Drive 17)**

**Explanation:** This message is for the use case when an implementation has detected that an Critiacal Array has deasserted.

May also be shown as 816f050d0411ffff or 0x816f050d0411ffff

**Severity:** Info

**Alert Category:** Critical - Hard Disk drive

**Serviceable:** No

**CIM Information:** **Prefix:** PLAT and **ID:** 0175

**SNMP Trap ID:** 5

**Automatically notify Support:** No

**User response:** No action; information only.

---

**816f050d-0412ffff Critical Array [ComputerSystemElementName] has deasserted. (Drive 18)**

**Explanation:** This message is for the use case when an implementation has detected that an Critiacal Array has deasserted.

May also be shown as 816f050d0412ffff or 0x816f050d0412ffff

**Severity:** Info

**Alert Category:** Critical - Hard Disk drive

**Serviceable:** No

**CIM Information:** **Prefix:** PLAT and **ID:** 0175

**SNMP Trap ID:** 5

**Automatically notify Support:** No

**User response:** No action; information only.

**816f050d-0413ffff Critical Array [ComputerSystemElementName] has deasserted. (Drive 19)**

**Explanation:** This message is for the use case when an implementation has detected that an Critiacal Array has deasserted.

May also be shown as 816f050d0413ffff or 0x816f050d0413ffff

**Severity:** Info

**Alert Category:** Critical - Hard Disk drive

**Serviceable:** No

**CIM Information:** **Prefix:** PLAT and **ID:** 0175

**SNMP Trap ID:** 5

**Automatically notify Support:** No

**User response:** No action; information only.

---

**816f050d-0414ffff Critical Array [ComputerSystemElementName] has deasserted. (Drive 20)**

**Explanation:** This message is for the use case when an implementation has detected that an Critiacal Array has deasserted.

May also be shown as 816f050d0414ffff or 0x816f050d0414ffff

**Severity:** Info

**Alert Category:** Critical - Hard Disk drive

**Serviceable:** No

**CIM Information:** **Prefix:** PLAT and **ID:** 0175

**SNMP Trap ID:** 5

**Automatically notify Support:** No

**User response:** No action; information only.

---

**816f050d-0415ffff Critical Array [ComputerSystemElementName] has deasserted. (Drive 21)**

**Explanation:** This message is for the use case when an implementation has detected that an Critiacal Array has deasserted.

May also be shown as 816f050d0415ffff or 0x816f050d0415ffff

**Severity:** Info

**Alert Category:** Critical - Hard Disk drive

**Serviceable:** No

**CIM Information:** **Prefix:** PLAT and **ID:** 0175

**SNMP Trap ID:** 5

**Automatically notify Support:** No

**User response:** No action; information only.

**816f050d-0416ffff Critical Array [ComputerSystemElementName] has deasserted. (Drive 22)**

**Explanation:** This message is for the use case when an implementation has detected that an Critiacal Array has deasserted.

May also be shown as 816f050d0416ffff or 0x816f050d0416ffff

**Severity:** Info

**Alert Category:** Critical - Hard Disk drive

**Serviceable:** No

**CIM Information:** **Prefix:** PLAT and **ID:** 0175

**SNMP Trap ID:** 5

**Automatically notify Support:** No

**User response:** No action; information only.

---

**816f050d-0417ffff Critical Array [ComputerSystemElementName] has deasserted. (Drive 23)**

**Explanation:** This message is for the use case when an implementation has detected that an Critiacal Array has deasserted.

May also be shown as 816f050d0417ffff or 0x816f050d0417ffff

**Severity:** Info

**Alert Category:** Critical - Hard Disk drive

**Serviceable:** No

**CIM Information:** **Prefix:** PLAT and **ID:** 0175

**SNMP Trap ID:** 5

**Automatically notify Support:** No

**User response:** No action; information only.

---

**816f050d-0418ffff Critical Array [ComputerSystemElementName] has deasserted. (Drive 24)**

**Explanation:** This message is for the use case when an implementation has detected that an Critiacal Array has deasserted.

May also be shown as 816f050d0418ffff or 0x816f050d0418ffff

**Severity:** Info

**Alert Category:** Critical - Hard Disk drive

**Serviceable:** No

**CIM Information:** **Prefix:** PLAT and **ID:** 0175

**SNMP Trap ID:** 5

**Automatically notify Support:** No

**User response:** No action; information only.

**816f050d-0419ffff Critical Array [ComputerSystemElementName] has deasserted. (Drive 25)**

**Explanation:** This message is for the use case when an implementation has detected that an Critiacal Array has deasserted.

May also be shown as 816f050d0419ffff or 0x816f050d0419ffff

**Severity:** Info

**Alert Category:** Critical - Hard Disk drive

**Serviceable:** No

**CIM Information:** **Prefix:** PLAT and **ID:** 0175

**SNMP Trap ID:** 5

**Automatically notify Support:** No

**User response:** No action; information only.

---

**816f050d-041affff Critical Array [ComputerSystemElementName] has deasserted. (Drive 26)**

**Explanation:** This message is for the use case when an implementation has detected that an Critiacal Array has deasserted.

May also be shown as 816f050d041affff or 0x816f050d041affff

**Severity:** Info

**Alert Category:** Critical - Hard Disk drive

**Serviceable:** No

**CIM Information:** **Prefix:** PLAT and **ID:** 0175

**SNMP Trap ID:** 5

**Automatically notify Support:** No

**User response:** No action; information only.

---

**816f050d-041bffff Critical Array [ComputerSystemElementName] has deasserted. (Drive 27)**

**Explanation:** This message is for the use case when an implementation has detected that an Critiacal Array has deasserted.

May also be shown as 816f050d041bffff or 0x816f050d041bffff

**Severity:** Info

**Alert Category:** Critical - Hard Disk drive

**Serviceable:** No

**CIM Information:** **Prefix:** PLAT and **ID:** 0175

**SNMP Trap ID:** 5

**Automatically notify Support:** No

**User response:** No action; information only.

**816f050d-041cffff Critical Array [ComputerSystemElementName] has deasserted. (Drive 28)**

**Explanation:** This message is for the use case when an implementation has detected that an Critiacal Array has deasserted.

May also be shown as 816f050d041cffff or 0x816f050d041cffff

**Severity:** Info

**Alert Category:** Critical - Hard Disk drive

**Serviceable:** No

**CIM Information:** **Prefix:** PLAT and **ID:** 0175

**SNMP Trap ID:** 5

**Automatically notify Support:** No

**User response:** No action; information only.

---

**816f050d-041dffff Critical Array [ComputerSystemElementName] has deasserted. (Drive 29)**

**Explanation:** This message is for the use case when an implementation has detected that an Critiacal Array has deasserted.

May also be shown as 816f050d041dffff or 0x816f050d041dffff

**Severity:** Info

**Alert Category:** Critical - Hard Disk drive

**Serviceable:** No

**CIM Information:** **Prefix:** PLAT and **ID:** 0175

**SNMP Trap ID:** 5

**Automatically notify Support:** No

**User response:** No action; information only.

---

**816f050d-041effff Critical Array [ComputerSystemElementName] has deasserted. (Drive 30)**

**Explanation:** This message is for the use case when an implementation has detected that an Critiacal Array has deasserted.

May also be shown as 816f050d041effff or 0x816f050d041effff

**Severity:** Info

**Alert Category:** Critical - Hard Disk drive

**Serviceable:** No

**CIM Information:** **Prefix:** PLAT and **ID:** 0175

**SNMP Trap ID:** 5

**Automatically notify Support:** No

**User response:** No action; information only.

**816f050d-041fffff Critical Array [ComputerSystemElementName] has deasserted. (Drive 31)**

**Explanation:** This message is for the use case when an implementation has detected that an Critiacal Array has deasserted.

May also be shown as 816f050d041fffff or 0x816f050d041fffff

**Severity:** Info

**Alert Category:** Critical - Hard Disk drive

**Serviceable:** No

**CIM Information:** **Prefix:** PLAT and **ID:** 0175

**SNMP Trap ID:** 5

**Automatically notify Support:** No

**User response:** No action; information only.

---

**816f0607-0301ffff An SM BIOS Uncorrectable CPU complex error for [ProcessorElementName] has deasserted. (CPU 1)**

**Explanation:** This message is for the use case when an SM BIOS Uncorrectable CPU complex error has deasserted.

May also be shown as 816f06070301ffff or 0x816f06070301ffff

**Severity:** Info

**Alert Category:** Critical - CPU

**Serviceable:** No

**CIM Information:** **Prefix:** PLAT and **ID:** 0817

**SNMP Trap ID:** 40

**Automatically notify Support:** No

**User response:** No action; information only.

---

**816f0607-0302ffff An SM BIOS Uncorrectable CPU complex error for [ProcessorElementName] has deasserted. (CPU 2)**

**Explanation:** This message is for the use case when an SM BIOS Uncorrectable CPU complex error has deasserted.

May also be shown as 816f06070302ffff or 0x816f06070302ffff

**Severity:** Info

**Alert Category:** Critical - CPU

**Serviceable:** No

**CIM Information:** **Prefix:** PLAT and **ID:** 0817

**SNMP Trap ID:** 40

**Automatically notify Support:** No

**User response:** No action; information only.

**816f0607-2584ffff An SM BIOS Uncorrectable CPU complex error for [ProcessorElementName] has deasserted. (All CPUs)**

**Explanation:** This message is for the use case when an SM BIOS Uncorrectable CPU complex error has deasserted.

May also be shown as 816f06072584ffff or 0x816f06072584ffff

**Severity:** Info

**Alert Category:** Critical - CPU

**Serviceable:** No

**CIM Information:** **Prefix:** PLAT and **ID:** 0817

**SNMP Trap ID:** 40

**Automatically notify Support:** No

**User response:** No action; information only. One of the CPUs :

---

**816f0608-1301ffff [PowerSupplyElementName] Configuration is OK. (PS Configuration)**

**Explanation:** This message is for the use case when an implementation when a Power Supply configuration is OK.

May also be shown as 816f06081301ffff or 0x816f06081301ffff

**Severity:** Info

**Alert Category:** Critical - Power

**Serviceable:** No

**CIM Information:** **Prefix:** PLAT and **ID:** 0105

**SNMP Trap ID:** 4

**Automatically notify Support:** No

**User response:** No action; information only.

---

**816f060d-0400ffff Array in system [ComputerSystemElementName] has been restored. (Drive 0)**

**Explanation:** This message is for the use case when an implementation has detected that a Failed Array has been Restored.

May also be shown as 816f060d0400ffff or 0x816f060d0400ffff

**Severity:** Info

**Alert Category:** Critical - Hard Disk drive

**Serviceable:** No

**CIM Information:** **Prefix:** PLAT and **ID:** 0177

**SNMP Trap ID:** 5

**Automatically notify Support:** No

**User response:** No action; information only.

**816f060d-0401ffff Array in system [ComputerSystemElementName] has been restored. (Drive 1)**

**Explanation:** This message is for the use case when an implementation has detected that a Failed Array has been Restored.

May also be shown as 816f060d0401ffff or 0x816f060d0401ffff

**Severity:** Info

**Alert Category:** Critical - Hard Disk drive

**Serviceable:** No

**CIM Information:** **Prefix:** PLAT and **ID:** 0177

**SNMP Trap ID:** 5

**Automatically notify Support:** No

**User response:** No action; information only.

---

**816f060d-0402ffff Array in system [ComputerSystemElementName] has been restored. (Drive 2)**

**Explanation:** This message is for the use case when an implementation has detected that a Failed Array has been Restored.

May also be shown as 816f060d0402ffff or 0x816f060d0402ffff

**Severity:** Info

**Alert Category:** Critical - Hard Disk drive

**Serviceable:** No

**CIM Information:** **Prefix:** PLAT and **ID:** 0177

**SNMP Trap ID:** 5

**Automatically notify Support:** No

**User response:** No action; information only.

---

**816f060d-0403ffff Array in system [ComputerSystemElementName] has been restored. (Drive 3)**

**Explanation:** This message is for the use case when an implementation has detected that a Failed Array has been Restored.

May also be shown as 816f060d0403ffff or 0x816f060d0403ffff

**Severity:** Info

**Alert Category:** Critical - Hard Disk drive

**Serviceable:** No

**CIM Information:** **Prefix:** PLAT and **ID:** 0177

**SNMP Trap ID:** 5

**Automatically notify Support:** No

**User response:** No action; information only.

**816f060d-0404ffff Array in system [ComputerSystemElementName] has been restored. (Drive 4)**

**Explanation:** This message is for the use case when an implementation has detected that a Failed Array has been Restored.

May also be shown as 816f060d0404ffff or 0x816f060d0404ffff

**Severity:** Info

**Alert Category:** Critical - Hard Disk drive

**Serviceable:** No

**CIM Information:** **Prefix:** PLAT and **ID:** 0177

**SNMP Trap ID:** 5

**Automatically notify Support:** No

**User response:** No action; information only.

---

**816f060d-0405ffff Array in system [ComputerSystemElementName] has been restored. (Drive 5)**

**Explanation:** This message is for the use case when an implementation has detected that a Failed Array has been Restored.

May also be shown as 816f060d0405ffff or 0x816f060d0405ffff

**Severity:** Info

**Alert Category:** Critical - Hard Disk drive

**Serviceable:** No

**CIM Information:** **Prefix:** PLAT and **ID:** 0177

**SNMP Trap ID:** 5

**Automatically notify Support:** No

**User response:** No action; information only.

---

**816f060d-0406ffff Array in system [ComputerSystemElementName] has been restored. (Drive 6)**

**Explanation:** This message is for the use case when an implementation has detected that a Failed Array has been Restored.

May also be shown as 816f060d0406ffff or 0x816f060d0406ffff

**Severity:** Info

**Alert Category:** Critical - Hard Disk drive

**Serviceable:** No

**CIM Information:** **Prefix:** PLAT and **ID:** 0177

**SNMP Trap ID:** 5

**Automatically notify Support:** No

**User response:** No action; information only.

**816f060d-0407ffff Array in system [ComputerSystemElementName] has been restored. (Drive 7)**

**Explanation:** This message is for the use case when an implementation has detected that a Failed Array has been Restored.

May also be shown as 816f060d0407ffff or 0x816f060d0407ffff

**Severity:** Info

**Alert Category:** Critical - Hard Disk drive

**Serviceable:** No

**CIM Information:** **Prefix:** PLAT and **ID:** 0177

**SNMP Trap ID:** 5

**Automatically notify Support:** No

**User response:** No action; information only.

---

**816f060d-0408ffff Array in system [ComputerSystemElementName] has been restored. (Drive 8)**

**Explanation:** This message is for the use case when an implementation has detected that a Failed Array has been Restored.

May also be shown as 816f060d0408ffff or 0x816f060d0408ffff

**Severity:** Info

**Alert Category:** Critical - Hard Disk drive

**Serviceable:** No

**CIM Information:** **Prefix:** PLAT and **ID:** 0177

**SNMP Trap ID:** 5

**Automatically notify Support:** No

**User response:** No action; information only.

---

**816f060d-0409ffff Array in system [ComputerSystemElementName] has been restored. (Drive 9)**

**Explanation:** This message is for the use case when an implementation has detected that a Failed Array has been Restored.

May also be shown as 816f060d0409ffff or 0x816f060d0409ffff

**Severity:** Info

**Alert Category:** Critical - Hard Disk drive

**Serviceable:** No

**CIM Information:** **Prefix:** PLAT and **ID:** 0177

**SNMP Trap ID:** 5

**Automatically notify Support:** No

**User response:** No action; information only.

**816f060d-040affff Array in system [ComputerSystemElementName] has been restored. (Drive 10)**

**Explanation:** This message is for the use case when an implementation has detected that a Failed Array has been Restored.

May also be shown as 816f060d040affff or 0x816f060d040affff

**Severity:** Info

**Alert Category:** Critical - Hard Disk drive

**Serviceable:** No

**CIM Information:** **Prefix:** PLAT and **ID:** 0177

**SNMP Trap ID:** 5

**Automatically notify Support:** No

**User response:** No action; information only.

---

**816f060d-040bffff Array in system [ComputerSystemElementName] has been restored. (Drive 11)**

**Explanation:** This message is for the use case when an implementation has detected that a Failed Array has been Restored.

May also be shown as 816f060d040bffff or 0x816f060d040bffff

**Severity:** Info

**Alert Category:** Critical - Hard Disk drive

**Serviceable:** No

**CIM Information:** **Prefix:** PLAT and **ID:** 0177

**SNMP Trap ID:** 5

**Automatically notify Support:** No

**User response:** No action; information only.

---

**816f060d-040cffff Array in system [ComputerSystemElementName] has been restored. (Drive 12)**

**Explanation:** This message is for the use case when an implementation has detected that a Failed Array has been Restored.

May also be shown as 816f060d040cffff or 0x816f060d040cffff

**Severity:** Info

**Alert Category:** Critical - Hard Disk drive

**Serviceable:** No

**CIM Information:** **Prefix:** PLAT and **ID:** 0177

**SNMP Trap ID:** 5

**Automatically notify Support:** No

**User response:** No action; information only.

**816f060d-040dffff Array in system [ComputerSystemElementName] has been restored. (Drive 13)**

**Explanation:** This message is for the use case when an implementation has detected that a Failed Array has been Restored.

May also be shown as 816f060d040dffff or 0x816f060d040dffff

**Severity:** Info

**Alert Category:** Critical - Hard Disk drive

**Serviceable:** No

**CIM Information:** **Prefix:** PLAT and **ID:** 0177

**SNMP Trap ID:** 5

**Automatically notify Support:** No

**User response:** No action; information only.

---

**816f060d-040effff Array in system [ComputerSystemElementName] has been restored. (Drive 14)**

**Explanation:** This message is for the use case when an implementation has detected that a Failed Array has been Restored.

May also be shown as 816f060d040effff or 0x816f060d040effff

**Severity:** Info

**Alert Category:** Critical - Hard Disk drive

**Serviceable:** No

**CIM Information:** **Prefix:** PLAT and **ID:** 0177

**SNMP Trap ID:** 5

**Automatically notify Support:** No

**User response:** No action; information only.

---

**816f060d-040fffff Array in system [ComputerSystemElementName] has been restored. (Drive 15)**

**Explanation:** This message is for the use case when an implementation has detected that a Failed Array has been Restored.

May also be shown as 816f060d040fffff or 0x816f060d040fffff

**Severity:** Info

**Alert Category:** Critical - Hard Disk drive

**Serviceable:** No

**CIM Information:** **Prefix:** PLAT and **ID:** 0177

**SNMP Trap ID:** 5

**Automatically notify Support:** No

**User response:** No action; information only.

**816f060d-0410ffff Array in system [ComputerSystemElementName] has been restored. (Drive 16)**

**Explanation:** This message is for the use case when an implementation has detected that a Failed Array has been Restored.

May also be shown as 816f060d0410ffff or 0x816f060d0410ffff

**Severity:** Info

**Alert Category:** Critical - Hard Disk drive

**Serviceable:** No

**CIM Information:** **Prefix:** PLAT and **ID:** 0177

**SNMP Trap ID:** 5

**Automatically notify Support:** No

**User response:** No action; information only.

**816f060d-0411ffff Array in system [ComputerSystemElementName] has been restored. (Drive 17)**

**Explanation:** This message is for the use case when an implementation has detected that a Failed Array has been Restored.

May also be shown as 816f060d0411ffff or 0x816f060d0411ffff

**Severity:** Info

**Alert Category:** Critical - Hard Disk drive

**Serviceable:** No

**CIM Information:** **Prefix:** PLAT and **ID:** 0177

**SNMP Trap ID:** 5

**Automatically notify Support:** No

**User response:** No action; information only.

**816f060d-0412ffff Array in system [ComputerSystemElementName] has been restored. (Drive 18)**

**Explanation:** This message is for the use case when an implementation has detected that a Failed Array has been Restored.

May also be shown as 816f060d0412ffff or 0x816f060d0412ffff

**Severity:** Info

**Alert Category:** Critical - Hard Disk drive

**Serviceable:** No

**CIM Information:** **Prefix:** PLAT and **ID:** 0177

**SNMP Trap ID:** 5

**Automatically notify Support:** No

**User response:** No action; information only.

**816f060d-0413ffff Array in system [ComputerSystemElementName] has been restored. (Drive 19)**

**Explanation:** This message is for the use case when an implementation has detected that a Failed Array has been Restored.

May also be shown as 816f060d0413ffff or 0x816f060d0413ffff

**Severity:** Info

**Alert Category:** Critical - Hard Disk drive

**Serviceable:** No

**CIM Information:** **Prefix:** PLAT and **ID:** 0177

**SNMP Trap ID:** 5

**Automatically notify Support:** No

**User response:** No action; information only.

---

**816f060d-0414ffff Array in system [ComputerSystemElementName] has been restored. (Drive 20)**

**Explanation:** This message is for the use case when an implementation has detected that a Failed Array has been Restored.

May also be shown as 816f060d0414ffff or 0x816f060d0414ffff

**Severity:** Info

**Alert Category:** Critical - Hard Disk drive

**Serviceable:** No

**CIM Information:** **Prefix:** PLAT and **ID:** 0177

**SNMP Trap ID:** 5

**Automatically notify Support:** No

**User response:** No action; information only.

---

**816f060d-0415ffff Array in system [ComputerSystemElementName] has been restored. (Drive 21)**

**Explanation:** This message is for the use case when an implementation has detected that a Failed Array has been Restored.

May also be shown as 816f060d0415ffff or 0x816f060d0415ffff

**Severity:** Info

**Alert Category:** Critical - Hard Disk drive

**Serviceable:** No

**CIM Information:** **Prefix:** PLAT and **ID:** 0177

**SNMP Trap ID:** 5

**Automatically notify Support:** No

**User response:** No action; information only.

**816f060d-0416ffff Array in system [ComputerSystemElementName] has been restored. (Drive 22)**

**Explanation:** This message is for the use case when an implementation has detected that a Failed Array has been Restored.

May also be shown as 816f060d0416ffff or 0x816f060d0416ffff

**Severity:** Info

**Alert Category:** Critical - Hard Disk drive

**Serviceable:** No

**CIM Information:** **Prefix:** PLAT and **ID:** 0177

**SNMP Trap ID:** 5

**Automatically notify Support:** No

**User response:** No action; information only.

---

**816f060d-0417ffff Array in system [ComputerSystemElementName] has been restored. (Drive 23)**

**Explanation:** This message is for the use case when an implementation has detected that a Failed Array has been Restored.

May also be shown as 816f060d0417ffff or 0x816f060d0417ffff

**Severity:** Info

**Alert Category:** Critical - Hard Disk drive

**Serviceable:** No

**CIM Information:** **Prefix:** PLAT and **ID:** 0177

**SNMP Trap ID:** 5

**Automatically notify Support:** No

**User response:** No action; information only.

---

**816f060d-0418ffff Array in system [ComputerSystemElementName] has been restored. (Drive 24)**

**Explanation:** This message is for the use case when an implementation has detected that a Failed Array has been Restored.

May also be shown as 816f060d0418ffff or 0x816f060d0418ffff

**Severity:** Info

**Alert Category:** Critical - Hard Disk drive

**Serviceable:** No

**CIM Information:** **Prefix:** PLAT and **ID:** 0177

**SNMP Trap ID:** 5

**Automatically notify Support:** No

**User response:** No action; information only.

**816f060d-0419ffff Array in system [ComputerSystemElementName] has been restored. (Drive 25)**

**Explanation:** This message is for the use case when an implementation has detected that a Failed Array has been Restored.

May also be shown as 816f060d0419ffff or 0x816f060d0419ffff

**Severity:** Info

**Alert Category:** Critical - Hard Disk drive

**Serviceable:** No

**CIM Information:** **Prefix:** PLAT and **ID:** 0177

**SNMP Trap ID:** 5

**Automatically notify Support:** No

**User response:** No action; information only.

---

**816f060d-041affff Array in system [ComputerSystemElementName] has been restored. (Drive 26)**

**Explanation:** This message is for the use case when an implementation has detected that a Failed Array has been Restored.

May also be shown as 816f060d041affff or 0x816f060d041affff

**Severity:** Info

**Alert Category:** Critical - Hard Disk drive

**Serviceable:** No

**CIM Information:** **Prefix:** PLAT and **ID:** 0177

**SNMP Trap ID:** 5

**Automatically notify Support:** No

**User response:** No action; information only.

---

**816f060d-041bffff Array in system [ComputerSystemElementName] has been restored. (Drive 27)**

**Explanation:** This message is for the use case when an implementation has detected that a Failed Array has been Restored.

May also be shown as 816f060d041bffff or 0x816f060d041bffff

**Severity:** Info

**Alert Category:** Critical - Hard Disk drive

**Serviceable:** No

**CIM Information:** **Prefix:** PLAT and **ID:** 0177

**SNMP Trap ID:** 5

**Automatically notify Support:** No

**User response:** No action; information only.

**816f060d-041cffff Array in system [ComputerSystemElementName] has been restored. (Drive 28)**

**Explanation:** This message is for the use case when an implementation has detected that a Failed Array has been Restored.

May also be shown as 816f060d041cffff or 0x816f060d041cffff

**Severity:** Info

**Alert Category:** Critical - Hard Disk drive

**Serviceable:** No

**CIM Information:** **Prefix:** PLAT and **ID:** 0177

**SNMP Trap ID:** 5

**Automatically notify Support:** No

**User response:** No action; information only.

---

**816f060d-041dffff Array in system [ComputerSystemElementName] has been restored. (Drive 29)**

**Explanation:** This message is for the use case when an implementation has detected that a Failed Array has been Restored.

May also be shown as 816f060d041dffff or 0x816f060d041dffff

**Severity:** Info

**Alert Category:** Critical - Hard Disk drive

**Serviceable:** No

**CIM Information:** **Prefix:** PLAT and **ID:** 0177

**SNMP Trap ID:** 5

**Automatically notify Support:** No

**User response:** No action; information only.

---

**816f060d-041effff Array in system [ComputerSystemElementName] has been restored. (Drive 30)**

**Explanation:** This message is for the use case when an implementation has detected that a Failed Array has been Restored.

May also be shown as 816f060d041effff or 0x816f060d041effff

**Severity:** Info

**Alert Category:** Critical - Hard Disk drive

**Serviceable:** No

**CIM Information:** **Prefix:** PLAT and **ID:** 0177

**SNMP Trap ID:** 5

**Automatically notify Support:** No

**User response:** No action; information only.

**816f060d-041fffff Array in system [ComputerSystemElementName] has been restored. (Drive 31)**

**Explanation:** This message is for the use case when an implementation has detected that a Failed Array has been Restored.

May also be shown as 816f060d041fffff or 0x816f060d041fffff

**Severity:** Info

**Alert Category:** Critical - Hard Disk drive

**Serviceable:** No

**CIM Information:** **Prefix:** PLAT and **ID:** 0177

**SNMP Trap ID:** 5

**Automatically notify Support:** No

**User response:** No action; information only.

---

**816f070c-2001ffff Configuration error for [PhysicalMemoryElementName] on Subsystem [MemoryElementName]has deasserted. (DIMM 1)**

**Explanation:** This message is for the use case when an implementation has detected a Memory DIMM configuration error has deasserted.

May also be shown as 816f070c2001ffff or 0x816f070c2001ffff

**Severity:** Info

**Alert Category:** Critical - Memory

**Serviceable:** No

**CIM Information:** **Prefix:** PLAT and **ID:** 0127

**SNMP Trap ID:** 41

**Automatically notify Support:** No

**User response:** No action; information only.

---

**816f070c-2002ffff Configuration error for [PhysicalMemoryElementName] on Subsystem [MemoryElementName]has deasserted. (DIMM 2)**

**Explanation:** This message is for the use case when an implementation has detected a Memory DIMM configuration error has deasserted.

May also be shown as 816f070c2002ffff or 0x816f070c2002ffff

**Severity:** Info

**Alert Category:** Critical - Memory

**Serviceable:** No

**CIM Information:** **Prefix:** PLAT and **ID:** 0127

**SNMP Trap ID:** 41

**Automatically notify Support:** No

**User response:** No action; information only.

**816f070c-2003ffff Configuration error for [PhysicalMemoryElementName] on Subsystem [MemoryElementName]has deasserted. (DIMM 3)**

**Explanation:** This message is for the use case when an implementation has detected a Memory DIMM configuration error has deasserted.

May also be shown as 816f070c2003ffff or 0x816f070c2003ffff

**Severity:** Info

**Alert Category:** Critical - Memory

**Serviceable:** No

**CIM Information:** **Prefix:** PLAT and **ID:** 0127

**SNMP Trap ID:** 41

**Automatically notify Support:** No

**User response:** No action; information only.

---

**816f070c-2004ffff Configuration error for [PhysicalMemoryElementName] on Subsystem [MemoryElementName]has deasserted. (DIMM 4)**

**Explanation:** This message is for the use case when an implementation has detected a Memory DIMM configuration error has deasserted.

May also be shown as 816f070c2004ffff or 0x816f070c2004ffff

**Severity:** Info

**Alert Category:** Critical - Memory

**Serviceable:** No

**CIM Information:** **Prefix:** PLAT and **ID:** 0127

**SNMP Trap ID:** 41

**Automatically notify Support:** No

**User response:** No action; information only.

---

**816f070c-2005ffff Configuration error for [PhysicalMemoryElementName] on Subsystem [MemoryElementName]has deasserted. (DIMM 5)**

**Explanation:** This message is for the use case when an implementation has detected a Memory DIMM configuration error has deasserted.

May also be shown as 816f070c2005ffff or 0x816f070c2005ffff

**Severity:** Info

**Alert Category:** Critical - Memory

**Serviceable:** No

**CIM Information:** **Prefix:** PLAT and **ID:** 0127

**SNMP Trap ID:** 41

**Automatically notify Support:** No

**User response:** No action; information only.

**816f070c-2006ffff Configuration error for [PhysicalMemoryElementName] on Subsystem [MemoryElementName]has deasserted. (DIMM 6)**

**Explanation:** This message is for the use case when an implementation has detected a Memory DIMM configuration error has deasserted.

May also be shown as 816f070c2006ffff or 0x816f070c2006ffff

**Severity:** Info

**Alert Category:** Critical - Memory

**Serviceable:** No

**CIM Information:** **Prefix:** PLAT and **ID:** 0127

**SNMP Trap ID:** 41

**Automatically notify Support:** No

**User response:** No action; information only.

---

**816f070c-2007ffff Configuration error for [PhysicalMemoryElementName] on Subsystem [MemoryElementName]has deasserted. (DIMM 7)**

**Explanation:** This message is for the use case when an implementation has detected a Memory DIMM configuration error has deasserted.

May also be shown as 816f070c2007ffff or 0x816f070c2007ffff

**Severity:** Info

**Alert Category:** Critical - Memory

**Serviceable:** No

**CIM Information:** **Prefix:** PLAT and **ID:** 0127

**SNMP Trap ID:** 41

**Automatically notify Support:** No

**User response:** No action; information only.

---

**816f070c-2008ffff Configuration error for [PhysicalMemoryElementName] on Subsystem [MemoryElementName]has deasserted. (DIMM 8)**

**Explanation:** This message is for the use case when an implementation has detected a Memory DIMM configuration error has deasserted.

May also be shown as 816f070c2008ffff or 0x816f070c2008ffff

**Severity:** Info

**Alert Category:** Critical - Memory

**Serviceable:** No

**CIM Information:** **Prefix:** PLAT and **ID:** 0127

**SNMP Trap ID:** 41

**Automatically notify Support:** No

**User response:** No action; information only.

**816f070c-2009ffff Configuration error for [PhysicalMemoryElementName] on Subsystem [MemoryElementName]has deasserted. (DIMM 9)**

**Explanation:** This message is for the use case when an implementation has detected a Memory DIMM configuration error has deasserted.

May also be shown as 816f070c2009ffff or 0x816f070c2009ffff

**Severity:** Info

**Alert Category:** Critical - Memory

**Serviceable:** No

**CIM Information:** **Prefix:** PLAT and **ID:** 0127

**SNMP Trap ID:** 41

**Automatically notify Support:** No

**User response:** No action; information only.

---

**816f070c-200affff Configuration error for [PhysicalMemoryElementName] on Subsystem [MemoryElementName]has deasserted. (DIMM 10)**

**Explanation:** This message is for the use case when an implementation has detected a Memory DIMM configuration error has deasserted.

May also be shown as 816f070c200affff or 0x816f070c200affff

**Severity:** Info

**Alert Category:** Critical - Memory

**Serviceable:** No

**CIM Information:** **Prefix:** PLAT and **ID:** 0127

**SNMP Trap ID:** 41

**Automatically notify Support:** No

**User response:** No action; information only.

---

**816f070c-200bffff Configuration error for [PhysicalMemoryElementName] on Subsystem [MemoryElementName]has deasserted. (DIMM 11)**

**Explanation:** This message is for the use case when an implementation has detected a Memory DIMM configuration error has deasserted.

May also be shown as 816f070c200bffff or 0x816f070c200bffff

**Severity:** Info

**Alert Category:** Critical - Memory

**Serviceable:** No

**CIM Information:** **Prefix:** PLAT and **ID:** 0127

**SNMP Trap ID:** 41

**Automatically notify Support:** No

**User response:** No action; information only.

**816f070c-200cffff Configuration error for [PhysicalMemoryElementName] on Subsystem [MemoryElementName]has deasserted. (DIMM 12)**

**Explanation:** This message is for the use case when an implementation has detected a Memory DIMM configuration error has deasserted.

May also be shown as 816f070c200cffff or 0x816f070c200cffff

**Severity:** Info

**Alert Category:** Critical - Memory

**Serviceable:** No

**CIM Information:** **Prefix:** PLAT and **ID:** 0127

**SNMP Trap ID:** 41

**Automatically notify Support:** No

**User response:** No action; information only.

---

**816f070c-200dffff Configuration error for [PhysicalMemoryElementName] on Subsystem [MemoryElementName]has deasserted. (DIMM 13)**

**Explanation:** This message is for the use case when an implementation has detected a Memory DIMM configuration error has deasserted.

May also be shown as 816f070c200dffff or 0x816f070c200dffff

**Severity:** Info

**Alert Category:** Critical - Memory

**Serviceable:** No

**CIM Information:** **Prefix:** PLAT and **ID:** 0127

**SNMP Trap ID:** 41

**Automatically notify Support:** No

**User response:** No action; information only.

---

**816f070c-200effff Configuration error for [PhysicalMemoryElementName] on Subsystem [MemoryElementName]has deasserted. (DIMM 14)**

**Explanation:** This message is for the use case when an implementation has detected a Memory DIMM configuration error has deasserted.

May also be shown as 816f070c200effff or 0x816f070c200effff

**Severity:** Info

**Alert Category:** Critical - Memory

**Serviceable:** No

**CIM Information:** **Prefix:** PLAT and **ID:** 0127

**SNMP Trap ID:** 41

**Automatically notify Support:** No

**User response:** No action; information only.

**816f070c-200fffff Configuration error for [PhysicalMemoryElementName] on Subsystem [MemoryElementName]has deasserted. (DIMM 15)**

**Explanation:** This message is for the use case when an implementation has detected a Memory DIMM configuration error has deasserted.

May also be shown as 816f070c200fffff or 0x816f070c200fffff

**Severity:** Info

**Alert Category:** Critical - Memory

**Serviceable:** No

**CIM Information:** **Prefix:** PLAT and **ID:** 0127

**SNMP Trap ID:** 41

**Automatically notify Support:** No

**User response:** No action; information only.

---

**816f070c-2010ffff Configuration error for [PhysicalMemoryElementName] on Subsystem [MemoryElementName]has deasserted. (DIMM 16)**

**Explanation:** This message is for the use case when an implementation has detected a Memory DIMM configuration error has deasserted.

May also be shown as 816f070c2010ffff or 0x816f070c2010ffff

**Severity:** Info

**Alert Category:** Critical - Memory

**Serviceable:** No

**CIM Information:** **Prefix:** PLAT and **ID:** 0127

**SNMP Trap ID:** 41

**Automatically notify Support:** No

**User response:** No action; information only.

---

**816f070c-2011ffff Configuration error for [PhysicalMemoryElementName] on Subsystem [MemoryElementName]has deasserted. (DIMM 17)**

**Explanation:** This message is for the use case when an implementation has detected a Memory DIMM configuration error has deasserted.

May also be shown as 816f070c2011ffff or 0x816f070c2011ffff

**Severity:** Info

**Alert Category:** Critical - Memory

**Serviceable:** No

**CIM Information:** **Prefix:** PLAT and **ID:** 0127

**SNMP Trap ID:** 41

**Automatically notify Support:** No

**User response:** No action; information only.

**816f070c-2012ffff Configuration error for [PhysicalMemoryElementName] on Subsystem [MemoryElementName]has deasserted. (DIMM 18)**

**Explanation:** This message is for the use case when an implementation has detected a Memory DIMM configuration error has deasserted.

May also be shown as 816f070c2012ffff or 0x816f070c2012ffff

**Severity:** Info

**Alert Category:** Critical - Memory

**Serviceable:** No

**CIM Information:** **Prefix:** PLAT and **ID:** 0127

**SNMP Trap ID:** 41

**Automatically notify Support:** No

**User response:** No action; information only.

**816f070c-2013ffff Configuration error for [PhysicalMemoryElementName] on Subsystem [MemoryElementName]has deasserted. (DIMM 19)**

**Explanation:** This message is for the use case when an implementation has detected a Memory DIMM configuration error has deasserted.

May also be shown as 816f070c2013ffff or 0x816f070c2013ffff

**Severity:** Info

**Alert Category:** Critical - Memory

**Serviceable:** No

**CIM Information:** **Prefix:** PLAT and **ID:** 0127

**SNMP Trap ID:** 41

**Automatically notify Support:** No

**User response:** No action; information only.

**816f070c-2014ffff Configuration error for [PhysicalMemoryElementName] on Subsystem [MemoryElementName]has deasserted. (DIMM 20)**

**Explanation:** This message is for the use case when an implementation has detected a Memory DIMM configuration error has deasserted.

May also be shown as 816f070c2014ffff or 0x816f070c2014ffff

**Severity:** Info

**Alert Category:** Critical - Memory

**Serviceable:** No

**CIM Information:** **Prefix:** PLAT and **ID:** 0127

**SNMP Trap ID:** 41

**Automatically notify Support:** No

**User response:** No action; information only.

**816f070c-2015ffff Configuration error for [PhysicalMemoryElementName] on Subsystem [MemoryElementName]has deasserted. (DIMM 21)**

**Explanation:** This message is for the use case when an implementation has detected a Memory DIMM configuration error has deasserted.

May also be shown as 816f070c2015ffff or 0x816f070c2015ffff

**Severity:** Info

**Alert Category:** Critical - Memory

**Serviceable:** No

**CIM Information:** **Prefix:** PLAT and **ID:** 0127

**SNMP Trap ID:** 41

**Automatically notify Support:** No

**User response:** No action; information only.

---

**816f070c-2016ffff Configuration error for [PhysicalMemoryElementName] on Subsystem [MemoryElementName]has deasserted. (DIMM 22)**

**Explanation:** This message is for the use case when an implementation has detected a Memory DIMM configuration error has deasserted.

May also be shown as 816f070c2016ffff or 0x816f070c2016ffff

**Severity:** Info

**Alert Category:** Critical - Memory

**Serviceable:** No

**CIM Information:** **Prefix:** PLAT and **ID:** 0127

**SNMP Trap ID:** 41

**Automatically notify Support:** No

**User response:** No action; information only.

---

**816f070c-2017ffff Configuration error for [PhysicalMemoryElementName] on Subsystem [MemoryElementName]has deasserted. (DIMM 23)**

**Explanation:** This message is for the use case when an implementation has detected a Memory DIMM configuration error has deasserted.

May also be shown as 816f070c2017ffff or 0x816f070c2017ffff

**Severity:** Info

**Alert Category:** Critical - Memory

**Serviceable:** No

**CIM Information:** **Prefix:** PLAT and **ID:** 0127

**SNMP Trap ID:** 41

**Automatically notify Support:** No

**User response:** No action; information only.

**816f070c-2018ffff Configuration error for [PhysicalMemoryElementName] on Subsystem [MemoryElementName]has deasserted. (DIMM 24)**

**Explanation:** This message is for the use case when an implementation has detected a Memory DIMM configuration error has deasserted.

May also be shown as 816f070c2018ffff or 0x816f070c2018ffff

**Severity:** Info

**Alert Category:** Critical - Memory

**Serviceable:** No

**CIM Information:** **Prefix:** PLAT and **ID:** 0127

**SNMP Trap ID:** 41

**Automatically notify Support:** No

**User response:** No action; information only.

---

**816f070c-2581ffff Configuration error for [PhysicalMemoryElementName] on Subsystem [MemoryElementName]has deasserted. (All DIMMS)**

**Explanation:** This message is for the use case when an implementation has detected a Memory DIMM configuration error has deasserted.

May also be shown as 816f070c2581ffff or 0x816f070c2581ffff

**Severity:** Info

**Alert Category:** Critical - Memory

**Serviceable:** No

**CIM Information:** **Prefix:** PLAT and **ID:** 0127

**SNMP Trap ID:** 41

**Automatically notify Support:** No

**User response:** No action; information only. One of the DIMMs :

---

**816f070d-0400ffff Rebuild completed for Array in system [ComputerSystemElementName]. (Drive 0)**

**Explanation:** This message is for the use case when an implementation has detected that an Array Rebuild has Completed.

May also be shown as 816f070d0400ffff or 0x816f070d0400ffff

**Severity:** Info

**Alert Category:** System - Other

**Serviceable:** No

**CIM Information:** **Prefix:** PLAT and **ID:** 0179

**SNMP Trap ID:**

**Automatically notify Support:** No

**User response:** No action; information only.

**816f070d-0401ffff Rebuild completed for Array in system [ComputerSystemElementName]. (Drive 1)**

**Explanation:** This message is for the use case when an implementation has detected that an Array Rebuild has Completed.

May also be shown as 816f070d0401ffff or 0x816f070d0401ffff

**Severity:** Info

**Alert Category:** System - Other

**Serviceable:** No

**CIM Information:** **Prefix:** PLAT and **ID:** 0179

**SNMP Trap ID:**

**Automatically notify Support:** No

**User response:** No action; information only.

---

**816f070d-0402ffff Rebuild completed for Array in system [ComputerSystemElementName]. (Drive 2)**

**Explanation:** This message is for the use case when an implementation has detected that an Array Rebuild has Completed.

May also be shown as 816f070d0402ffff or 0x816f070d0402ffff

**Severity:** Info

**Alert Category:** System - Other

**Serviceable:** No

**CIM Information:** **Prefix:** PLAT and **ID:** 0179

**SNMP Trap ID:**

**Automatically notify Support:** No

**User response:** No action; information only.

---

**816f070d-0403ffff Rebuild completed for Array in system [ComputerSystemElementName]. (Drive 3)**

**Explanation:** This message is for the use case when an implementation has detected that an Array Rebuild has Completed.

May also be shown as 816f070d0403ffff or 0x816f070d0403ffff

**Severity:** Info

**Alert Category:** System - Other

**Serviceable:** No

**CIM Information:** **Prefix:** PLAT and **ID:** 0179

**SNMP Trap ID:**

**Automatically notify Support:** No

**User response:** No action; information only.

**816f070d-0404ffff Rebuild completed for Array in system [ComputerSystemElementName]. (Drive 4)**

**Explanation:** This message is for the use case when an implementation has detected that an Array Rebuild has Completed.

May also be shown as 816f070d0404ffff or 0x816f070d0404ffff

**Severity:** Info

**Alert Category:** System - Other

**Serviceable:** No

**CIM Information:** **Prefix:** PLAT and **ID:** 0179

**SNMP Trap ID:**

**Automatically notify Support:** No

**User response:** No action; information only.

---

**816f070d-0405ffff Rebuild completed for Array in system [ComputerSystemElementName]. (Drive 5)**

**Explanation:** This message is for the use case when an implementation has detected that an Array Rebuild has Completed.

May also be shown as 816f070d0405ffff or 0x816f070d0405ffff

**Severity:** Info

**Alert Category:** System - Other

**Serviceable:** No

**CIM Information:** **Prefix:** PLAT and **ID:** 0179

**SNMP Trap ID:**

**Automatically notify Support:** No

**User response:** No action; information only.

---

**816f070d-0406ffff Rebuild completed for Array in system [ComputerSystemElementName]. (Drive 6)**

**Explanation:** This message is for the use case when an implementation has detected that an Array Rebuild has Completed.

May also be shown as 816f070d0406ffff or 0x816f070d0406ffff

**Severity:** Info

**Alert Category:** System - Other

**Serviceable:** No

**CIM Information:** **Prefix:** PLAT and **ID:** 0179

**SNMP Trap ID:**

**Automatically notify Support:** No

**User response:** No action; information only.

**816f070d-0407ffff Rebuild completed for Array in system [ComputerSystemElementName]. (Drive 7)**

**Explanation:** This message is for the use case when an implementation has detected that an Array Rebuild has Completed.

May also be shown as 816f070d0407ffff or 0x816f070d0407ffff

**Severity:** Info

**Alert Category:** System - Other

**Serviceable:** No

**CIM Information:** **Prefix:** PLAT and **ID:** 0179

**SNMP Trap ID:**

**Automatically notify Support:** No

**User response:** No action; information only.

---

**816f070d-0408ffff Rebuild completed for Array in system [ComputerSystemElementName]. (Drive 8)**

**Explanation:** This message is for the use case when an implementation has detected that an Array Rebuild has Completed.

May also be shown as 816f070d0408ffff or 0x816f070d0408ffff

**Severity:** Info

**Alert Category:** System - Other

**Serviceable:** No

**CIM Information:** **Prefix:** PLAT and **ID:** 0179

**SNMP Trap ID:**

**Automatically notify Support:** No

**User response:** No action; information only.

---

**816f070d-0409ffff Rebuild completed for Array in system [ComputerSystemElementName]. (Drive 9)**

**Explanation:** This message is for the use case when an implementation has detected that an Array Rebuild has Completed.

May also be shown as 816f070d0409ffff or 0x816f070d0409ffff

**Severity:** Info

**Alert Category:** System - Other

**Serviceable:** No

**CIM Information:** **Prefix:** PLAT and **ID:** 0179

**SNMP Trap ID:**

**Automatically notify Support:** No

**User response:** No action; information only.

**816f070d-040affff Rebuild completed for Array in system [ComputerSystemElementName]. (Drive 10)**

**Explanation:** This message is for the use case when an implementation has detected that an Array Rebuild has Completed.

May also be shown as 816f070d040affff or 0x816f070d040affff

**Severity:** Info

**Alert Category:** System - Other

**Serviceable:** No

**CIM Information:** **Prefix:** PLAT and **ID:** 0179

**SNMP Trap ID:**

**Automatically notify Support:** No

**User response:** No action; information only.

---

**816f070d-040bffff Rebuild completed for Array in system [ComputerSystemElementName]. (Drive 11)**

**Explanation:** This message is for the use case when an implementation has detected that an Array Rebuild has Completed.

May also be shown as 816f070d040bffff or 0x816f070d040bffff

**Severity:** Info

**Alert Category:** System - Other

**Serviceable:** No

**CIM Information:** **Prefix:** PLAT and **ID:** 0179

**SNMP Trap ID:**

**Automatically notify Support:** No

**User response:** No action; information only.

---

**816f070d-040cffff Rebuild completed for Array in system [ComputerSystemElementName]. (Drive 12)**

**Explanation:** This message is for the use case when an implementation has detected that an Array Rebuild has Completed.

May also be shown as 816f070d040cffff or 0x816f070d040cffff

**Severity:** Info

**Alert Category:** System - Other

**Serviceable:** No

**CIM Information:** **Prefix:** PLAT and **ID:** 0179

**SNMP Trap ID:**

**Automatically notify Support:** No

**User response:** No action; information only.

**816f070d-040dffff Rebuild completed for Array in system [ComputerSystemElementName]. (Drive 13)**

**Explanation:** This message is for the use case when an implementation has detected that an Array Rebuild has Completed.

May also be shown as 816f070d040dffff or 0x816f070d040dffff

**Severity:** Info

**Alert Category:** System - Other

**Serviceable:** No

**CIM Information:** **Prefix:** PLAT and **ID:** 0179

**SNMP Trap ID:**

**Automatically notify Support:** No

**User response:** No action; information only.

---

**816f070d-040effff Rebuild completed for Array in system [ComputerSystemElementName]. (Drive 14)**

**Explanation:** This message is for the use case when an implementation has detected that an Array Rebuild has Completed.

May also be shown as 816f070d040effff or 0x816f070d040effff

**Severity:** Info

**Alert Category:** System - Other

**Serviceable:** No

**CIM Information:** **Prefix:** PLAT and **ID:** 0179

**SNMP Trap ID:**

**Automatically notify Support:** No

**User response:** No action; information only.

---

**816f070d-040fffff Rebuild completed for Array in system [ComputerSystemElementName]. (Drive 15)**

**Explanation:** This message is for the use case when an implementation has detected that an Array Rebuild has Completed.

May also be shown as 816f070d040fffff or 0x816f070d040fffff

**Severity:** Info

**Alert Category:** System - Other

**Serviceable:** No

**CIM Information:** **Prefix:** PLAT and **ID:** 0179

**SNMP Trap ID:**

**Automatically notify Support:** No

**User response:** No action; information only.

**816f070d-0410ffff Rebuild completed for Array in system [ComputerSystemElementName]. (Drive 16)**

**Explanation:** This message is for the use case when an implementation has detected that an Array Rebuild has Completed.

May also be shown as 816f070d0410ffff or 0x816f070d0410ffff

**Severity:** Info

**Alert Category:** System - Other

**Serviceable:** No

**CIM Information:** **Prefix:** PLAT and **ID:** 0179

**SNMP Trap ID:**

**Automatically notify Support:** No

**User response:** No action; information only.

---

**816f070d-0411ffff Rebuild completed for Array in system [ComputerSystemElementName]. (Drive 17)**

**Explanation:** This message is for the use case when an implementation has detected that an Array Rebuild has Completed.

May also be shown as 816f070d0411ffff or 0x816f070d0411ffff

**Severity:** Info

**Alert Category:** System - Other

**Serviceable:** No

**CIM Information:** **Prefix:** PLAT and **ID:** 0179

**SNMP Trap ID:**

**Automatically notify Support:** No

**User response:** No action; information only.

---

**816f070d-0412ffff Rebuild completed for Array in system [ComputerSystemElementName]. (Drive 18)**

**Explanation:** This message is for the use case when an implementation has detected that an Array Rebuild has Completed.

May also be shown as 816f070d0412ffff or 0x816f070d0412ffff

**Severity:** Info

**Alert Category:** System - Other

**Serviceable:** No

**CIM Information:** **Prefix:** PLAT and **ID:** 0179

**SNMP Trap ID:**

**Automatically notify Support:** No

**User response:** No action; information only.

**816f070d-0413ffff Rebuild completed for Array in system [ComputerSystemElementName]. (Drive 19)**

**Explanation:** This message is for the use case when an implementation has detected that an Array Rebuild has Completed.

May also be shown as 816f070d0413ffff or 0x816f070d0413ffff

**Severity:** Info

**Alert Category:** System - Other

**Serviceable:** No

**CIM Information:** **Prefix:** PLAT and **ID:** 0179

**SNMP Trap ID:**

**Automatically notify Support:** No

**User response:** No action; information only.

---

**816f070d-0414ffff Rebuild completed for Array in system [ComputerSystemElementName]. (Drive 20)**

**Explanation:** This message is for the use case when an implementation has detected that an Array Rebuild has Completed.

May also be shown as 816f070d0414ffff or 0x816f070d0414ffff

**Severity:** Info

**Alert Category:** System - Other

**Serviceable:** No

**CIM Information:** **Prefix:** PLAT and **ID:** 0179

**SNMP Trap ID:**

**Automatically notify Support:** No

**User response:** No action; information only.

---

**816f070d-0415ffff Rebuild completed for Array in system [ComputerSystemElementName]. (Drive 21)**

**Explanation:** This message is for the use case when an implementation has detected that an Array Rebuild has Completed.

May also be shown as 816f070d0415ffff or 0x816f070d0415ffff

**Severity:** Info

**Alert Category:** System - Other

**Serviceable:** No

**CIM Information:** **Prefix:** PLAT and **ID:** 0179

**SNMP Trap ID:**

**Automatically notify Support:** No

**User response:** No action; information only.

**816f070d-0416ffff Rebuild completed for Array in system [ComputerSystemElementName]. (Drive 22)**

**Explanation:** This message is for the use case when an implementation has detected that an Array Rebuild has Completed.

May also be shown as 816f070d0416ffff or 0x816f070d0416ffff

**Severity:** Info

**Alert Category:** System - Other

**Serviceable:** No

**CIM Information:** **Prefix:** PLAT and **ID:** 0179

**SNMP Trap ID:**

**Automatically notify Support:** No

**User response:** No action; information only.

---

**816f070d-0417ffff Rebuild completed for Array in system [ComputerSystemElementName]. (Drive 23)**

**Explanation:** This message is for the use case when an implementation has detected that an Array Rebuild has Completed.

May also be shown as 816f070d0417ffff or 0x816f070d0417ffff

**Severity:** Info

**Alert Category:** System - Other

**Serviceable:** No

**CIM Information:** **Prefix:** PLAT and **ID:** 0179

**SNMP Trap ID:**

**Automatically notify Support:** No

**User response:** No action; information only.

---

**816f070d-0418ffff Rebuild completed for Array in system [ComputerSystemElementName]. (Drive 24)**

**Explanation:** This message is for the use case when an implementation has detected that an Array Rebuild has Completed.

May also be shown as 816f070d0418ffff or 0x816f070d0418ffff

**Severity:** Info

**Alert Category:** System - Other

**Serviceable:** No

**CIM Information:** **Prefix:** PLAT and **ID:** 0179

**SNMP Trap ID:**

**Automatically notify Support:** No

**User response:** No action; information only.

**816f070d-0419ffff Rebuild completed for Array in system [ComputerSystemElementName]. (Drive 25)**

**Explanation:** This message is for the use case when an implementation has detected that an Array Rebuild has Completed.

May also be shown as 816f070d0419ffff or 0x816f070d0419ffff

**Severity:** Info

**Alert Category:** System - Other

**Serviceable:** No

**CIM Information:** **Prefix:** PLAT and **ID:** 0179

**SNMP Trap ID:**

**Automatically notify Support:** No

**User response:** No action; information only.

---

**816f070d-041affff Rebuild completed for Array in system [ComputerSystemElementName]. (Drive 26)**

**Explanation:** This message is for the use case when an implementation has detected that an Array Rebuild has Completed.

May also be shown as 816f070d041affff or 0x816f070d041affff

**Severity:** Info

**Alert Category:** System - Other

**Serviceable:** No

**CIM Information:** **Prefix:** PLAT and **ID:** 0179

**SNMP Trap ID:**

**Automatically notify Support:** No

**User response:** No action; information only.

---

**816f070d-041bffff Rebuild completed for Array in system [ComputerSystemElementName]. (Drive 27)**

**Explanation:** This message is for the use case when an implementation has detected that an Array Rebuild has Completed.

May also be shown as 816f070d041bffff or 0x816f070d041bffff

**Severity:** Info

**Alert Category:** System - Other

**Serviceable:** No

**CIM Information:** **Prefix:** PLAT and **ID:** 0179

**SNMP Trap ID:**

**Automatically notify Support:** No

**User response:** No action; information only.

**816f070d-041cffff Rebuild completed for Array in system [ComputerSystemElementName]. (Drive 28)**

**Explanation:** This message is for the use case when an implementation has detected that an Array Rebuild has Completed.

May also be shown as 816f070d041cffff or 0x816f070d041cffff

**Severity:** Info

**Alert Category:** System - Other

**Serviceable:** No

**CIM Information:** **Prefix:** PLAT and **ID:** 0179

**SNMP Trap ID:**

**Automatically notify Support:** No

**User response:** No action; information only.

---

**816f070d-041dffff Rebuild completed for Array in system [ComputerSystemElementName]. (Drive 29)**

**Explanation:** This message is for the use case when an implementation has detected that an Array Rebuild has Completed.

May also be shown as 816f070d041dffff or 0x816f070d041dffff

**Severity:** Info

**Alert Category:** System - Other

**Serviceable:** No

**CIM Information:** **Prefix:** PLAT and **ID:** 0179

**SNMP Trap ID:**

**Automatically notify Support:** No

**User response:** No action; information only.

---

**816f070d-041effff Rebuild completed for Array in system [ComputerSystemElementName]. (Drive 30)**

**Explanation:** This message is for the use case when an implementation has detected that an Array Rebuild has Completed.

May also be shown as 816f070d041effff or 0x816f070d041effff

**Severity:** Info

**Alert Category:** System - Other

**Serviceable:** No

**CIM Information:** **Prefix:** PLAT and **ID:** 0179

**SNMP Trap ID:**

**Automatically notify Support:** No

**User response:** No action; information only.

**816f070d-041fffff Rebuild completed for Array in system [ComputerSystemElementName]. (Drive 31)**

**Explanation:** This message is for the use case when an implementation has detected that an Array Rebuild has Completed.

May also be shown as 816f070d041fffff or 0x816f070d041fffff

**Severity:** Info

**Alert Category:** System - Other

**Serviceable:** No

**CIM Information:** **Prefix:** PLAT and **ID:** 0179

**SNMP Trap ID:**

**Automatically notify Support:** No

**User response:** No action; information only.

---

**816f0807-0301ffff [ProcessorElementName] has been Enabled. (CPU 1)**

**Explanation:** This message is for the use case when an implementation has detected a Processor has been Enabled.

May also be shown as 816f08070301ffff or 0x816f08070301ffff

**Severity:** Info

**Alert Category:** System - Other

**Serviceable:** No

**CIM Information:** **Prefix:** PLAT and **ID:** 0060

**SNMP Trap ID:**

**Automatically notify Support:** No

**User response:** No action; information only.

---

**816f0807-0302ffff [ProcessorElementName] has been Enabled. (CPU 2)**

**Explanation:** This message is for the use case when an implementation has detected a Processor has been Enabled.

May also be shown as 816f08070302ffff or 0x816f08070302ffff

**Severity:** Info

**Alert Category:** System - Other

**Serviceable:** No

**CIM Information:** **Prefix:** PLAT and **ID:** 0060

**SNMP Trap ID:**

**Automatically notify Support:** No

**User response:** No action; information only.

**816f0807-2584ffff [ProcessorElementName] has been Enabled. (All CPUs)**

**Explanation:** This message is for the use case when an implementation has detected a Processor has been Enabled.

May also be shown as 816f08072584ffff or 0x816f08072584ffff

**Severity:** Info

**Alert Category:** System - Other

**Serviceable:** No

**CIM Information:** **Prefix:** PLAT and **ID:** 0060

**SNMP Trap ID:**

**Automatically notify Support:** No

**User response:** No action; information only. One of the CPUs :

---

**816f0813-2581ffff System [ComputerSystemElementName]has recovered from an Uncorrectable Bus Error. (DIMMs)**

**Explanation:** This message is for the use case when an implementation has detected a that a system has recovered from a Bus Uncorrectable Error.

May also be shown as 816f08132581ffff or 0x816f08132581ffff

**Severity:** Info

**Alert Category:** Critical - Other

**Serviceable:** No

**CIM Information:** **Prefix:** PLAT and **ID:** 0241

**SNMP Trap ID:** 50

**Automatically notify Support:** No

**User response:** No action; information only.

---

**816f0813-2582ffff System [ComputerSystemElementName]has recovered from an Uncorrectable Bus Error. (PCIs)**

**Explanation:** This message is for the use case when an implementation has detected a that a system has recovered from a Bus Uncorrectable Error.

May also be shown as 816f08132582ffff or 0x816f08132582ffff

**Severity:** Info

**Alert Category:** Critical - Other

**Serviceable:** No

**CIM Information:** **Prefix:** PLAT and **ID:** 0241

**SNMP Trap ID:** 50

**Automatically notify Support:** No

**User response:** No action; information only.

**816f0813-2584ffff System [ComputerSystemElementName]has recovered from an Uncorrectable Bus Error. (CPUs)**

**Explanation:** This message is for the use case when an implementation has detected a that a system has recovered from a Bus Uncorrectable Error.

May also be shown as 816f08132584ffff or 0x816f08132584ffff

**Severity:** Info

**Alert Category:** Critical - Other

**Serviceable:** No

**CIM Information:** **Prefix:** PLAT and **ID:** 0241

**SNMP Trap ID:** 50

**Automatically notify Support:** No

**User response:** No action; information only.

---

**816f090c-2001ffff [PhysicalMemoryElementName] on Subsystem [MemoryElementName] is no longer Throttled. (DIMM 1)**

**Explanation:** This message is for the use case when an implementation has detected Memory is no longer Throttled.

May also be shown as 816f090c2001ffff or 0x816f090c2001ffff

**Severity:** Info

**Alert Category:** System - Other

**Serviceable:** No

**CIM Information:** **Prefix:** PLAT and **ID:** 0143

**SNMP Trap ID:**

**Automatically notify Support:** No

**User response:** No action; information only.

---

**816f090c-2002ffff [PhysicalMemoryElementName] on Subsystem [MemoryElementName] is no longer Throttled. (DIMM 2)**

**Explanation:** This message is for the use case when an implementation has detected Memory is no longer Throttled.

May also be shown as 816f090c2002ffff or 0x816f090c2002ffff

**Severity:** Info

**Alert Category:** System - Other

**Serviceable:** No

**CIM Information:** **Prefix:** PLAT and **ID:** 0143

**SNMP Trap ID:**

**Automatically notify Support:** No

**User response:** No action; information only.

**816f090c-2003ffff [PhysicalMemoryElementName] on Subsystem [MemoryElementName] is no longer Throttled. (DIMM 3)**

**Explanation:** This message is for the use case when an implementation has detected Memory is no longer Throttled.

May also be shown as 816f090c2003ffff or 0x816f090c2003ffff

**Severity:** Info

**Alert Category:** System - Other

**Serviceable:** No

**CIM Information:** **Prefix:** PLAT and **ID:** 0143

**SNMP Trap ID:**

**Automatically notify Support:** No

**User response:** No action; information only.

---

**816f090c-2004ffff [PhysicalMemoryElementName] on Subsystem [MemoryElementName] is no longer Throttled. (DIMM 4)**

**Explanation:** This message is for the use case when an implementation has detected Memory is no longer Throttled.

May also be shown as 816f090c2004ffff or 0x816f090c2004ffff

**Severity:** Info

**Alert Category:** System - Other

**Serviceable:** No

**CIM Information:** **Prefix:** PLAT and **ID:** 0143

**SNMP Trap ID:**

**Automatically notify Support:** No

**User response:** No action; information only.

---

**816f090c-2005ffff [PhysicalMemoryElementName] on Subsystem [MemoryElementName] is no longer Throttled. (DIMM 5)**

**Explanation:** This message is for the use case when an implementation has detected Memory is no longer Throttled.

May also be shown as 816f090c2005ffff or 0x816f090c2005ffff

**Severity:** Info

**Alert Category:** System - Other

**Serviceable:** No

**CIM Information:** **Prefix:** PLAT and **ID:** 0143

**SNMP Trap ID:**

**Automatically notify Support:** No

**User response:** No action; information only.

**816f090c-2006ffff [PhysicalMemoryElementName] on Subsystem [MemoryElementName] is no longer Throttled. (DIMM 6)**

**Explanation:** This message is for the use case when an implementation has detected Memory is no longer Throttled.

May also be shown as 816f090c2006ffff or 0x816f090c2006ffff

**Severity:** Info

**Alert Category:** System - Other

**Serviceable:** No

**CIM Information:** **Prefix:** PLAT and **ID:** 0143

**SNMP Trap ID:**

**Automatically notify Support:** No

**User response:** No action; information only.

---

**816f090c-2007ffff [PhysicalMemoryElementName] on Subsystem [MemoryElementName] is no longer Throttled. (DIMM 7)**

**Explanation:** This message is for the use case when an implementation has detected Memory is no longer Throttled.

May also be shown as 816f090c2007ffff or 0x816f090c2007ffff

**Severity:** Info

**Alert Category:** System - Other

**Serviceable:** No

**CIM Information:** **Prefix:** PLAT and **ID:** 0143

**SNMP Trap ID:**

**Automatically notify Support:** No

**User response:** No action; information only.

---

**816f090c-2008ffff [PhysicalMemoryElementName] on Subsystem [MemoryElementName] is no longer Throttled. (DIMM 8)**

**Explanation:** This message is for the use case when an implementation has detected Memory is no longer Throttled.

May also be shown as 816f090c2008ffff or 0x816f090c2008ffff

**Severity:** Info

**Alert Category:** System - Other

**Serviceable:** No

**CIM Information:** **Prefix:** PLAT and **ID:** 0143

**SNMP Trap ID:**

**Automatically notify Support:** No

**User response:** No action; information only.

**816f090c-2009ffff [PhysicalMemoryElementName] on Subsystem [MemoryElementName] is no longer Throttled. (DIMM 9)**

**Explanation:** This message is for the use case when an implementation has detected Memory is no longer Throttled.

May also be shown as 816f090c2009ffff or 0x816f090c2009ffff

**Severity:** Info

**Alert Category:** System - Other

**Serviceable:** No

**CIM Information:** **Prefix:** PLAT and **ID:** 0143

**SNMP Trap ID:**

**Automatically notify Support:** No

**User response:** No action; information only.

---

**816f090c-200affff [PhysicalMemoryElementName] on Subsystem [MemoryElementName] is no longer Throttled. (DIMM 10)**

**Explanation:** This message is for the use case when an implementation has detected Memory is no longer Throttled.

May also be shown as 816f090c200affff or 0x816f090c200affff

**Severity:** Info

**Alert Category:** System - Other

**Serviceable:** No

**CIM Information:** **Prefix:** PLAT and **ID:** 0143

**SNMP Trap ID:**

**Automatically notify Support:** No

**User response:** No action; information only.

---

**816f090c-200bffff [PhysicalMemoryElementName] on Subsystem [MemoryElementName] is no longer Throttled. (DIMM 11)**

**Explanation:** This message is for the use case when an implementation has detected Memory is no longer Throttled.

May also be shown as 816f090c200bffff or 0x816f090c200bffff

**Severity:** Info

**Alert Category:** System - Other

**Serviceable:** No

**CIM Information:** **Prefix:** PLAT and **ID:** 0143

**SNMP Trap ID:**

**Automatically notify Support:** No

**User response:** No action; information only.

**816f090c-200cffff [PhysicalMemoryElementName] on Subsystem [MemoryElementName] is no longer Throttled. (DIMM 12)**

**Explanation:** This message is for the use case when an implementation has detected Memory is no longer Throttled.

May also be shown as 816f090c200cffff or 0x816f090c200cffff

**Severity:** Info

**Alert Category:** System - Other

**Serviceable:** No

**CIM Information:** **Prefix:** PLAT and **ID:** 0143

**SNMP Trap ID:**

**Automatically notify Support:** No

**User response:** No action; information only.

---

**816f090c-200dffff [PhysicalMemoryElementName] on Subsystem [MemoryElementName] is no longer Throttled. (DIMM 13)**

**Explanation:** This message is for the use case when an implementation has detected Memory is no longer Throttled.

May also be shown as 816f090c200dffff or 0x816f090c200dffff

**Severity:** Info

**Alert Category:** System - Other

**Serviceable:** No

**CIM Information:** **Prefix:** PLAT and **ID:** 0143

**SNMP Trap ID:**

**Automatically notify Support:** No

**User response:** No action; information only.

---

**816f090c-200effff [PhysicalMemoryElementName] on Subsystem [MemoryElementName] is no longer Throttled. (DIMM 14)**

**Explanation:** This message is for the use case when an implementation has detected Memory is no longer Throttled.

May also be shown as 816f090c200effff or 0x816f090c200effff

**Severity:** Info

**Alert Category:** System - Other

**Serviceable:** No

**CIM Information:** **Prefix:** PLAT and **ID:** 0143

**SNMP Trap ID:**

**Automatically notify Support:** No

**User response:** No action; information only.

**816f090c-200fffff [PhysicalMemoryElementName] on Subsystem [MemoryElementName] is no longer Throttled. (DIMM 15)**

**Explanation:** This message is for the use case when an implementation has detected Memory is no longer Throttled.

May also be shown as 816f090c200fffff or 0x816f090c200fffff

**Severity:** Info

**Alert Category:** System - Other

**Serviceable:** No

**CIM Information:** **Prefix:** PLAT and **ID:** 0143

**SNMP Trap ID:**

**Automatically notify Support:** No

**User response:** No action; information only.

---

**816f090c-2010ffff [PhysicalMemoryElementName] on Subsystem [MemoryElementName] is no longer Throttled. (DIMM 16)**

**Explanation:** This message is for the use case when an implementation has detected Memory is no longer Throttled.

May also be shown as 816f090c2010ffff or 0x816f090c2010ffff

**Severity:** Info

**Alert Category:** System - Other

**Serviceable:** No

**CIM Information:** **Prefix:** PLAT and **ID:** 0143

**SNMP Trap ID:**

**Automatically notify Support:** No

**User response:** No action; information only.

---

**816f090c-2011ffff [PhysicalMemoryElementName] on Subsystem [MemoryElementName] is no longer Throttled. (DIMM 17)**

**Explanation:** This message is for the use case when an implementation has detected Memory is no longer Throttled.

May also be shown as 816f090c2011ffff or 0x816f090c2011ffff

**Severity:** Info

**Alert Category:** System - Other

**Serviceable:** No

**CIM Information:** **Prefix:** PLAT and **ID:** 0143

**SNMP Trap ID:**

**Automatically notify Support:** No

**User response:** No action; information only.

**816f090c-2012ffff [PhysicalMemoryElementName] on Subsystem [MemoryElementName] is no longer Throttled. (DIMM 18)**

**Explanation:** This message is for the use case when an implementation has detected Memory is no longer Throttled.

May also be shown as 816f090c2012ffff or 0x816f090c2012ffff

**Severity:** Info

**Alert Category:** System - Other

**Serviceable:** No

**CIM Information:** **Prefix:** PLAT and **ID:** 0143

**SNMP Trap ID:**

**Automatically notify Support:** No

**User response:** No action; information only.

---

**816f090c-2013ffff [PhysicalMemoryElementName] on Subsystem [MemoryElementName] is no longer Throttled. (DIMM 19)**

**Explanation:** This message is for the use case when an implementation has detected Memory is no longer Throttled.

May also be shown as 816f090c2013ffff or 0x816f090c2013ffff

**Severity:** Info

**Alert Category:** System - Other

**Serviceable:** No

**CIM Information:** **Prefix:** PLAT and **ID:** 0143

**SNMP Trap ID:**

**Automatically notify Support:** No

**User response:** No action; information only.

---

**816f090c-2014ffff [PhysicalMemoryElementName] on Subsystem [MemoryElementName] is no longer Throttled. (DIMM 20)**

**Explanation:** This message is for the use case when an implementation has detected Memory is no longer Throttled.

May also be shown as 816f090c2014ffff or 0x816f090c2014ffff

**Severity:** Info

**Alert Category:** System - Other

**Serviceable:** No

**CIM Information:** **Prefix:** PLAT and **ID:** 0143

**SNMP Trap ID:**

**Automatically notify Support:** No

**User response:** No action; information only.

**816f090c-2015ffff [PhysicalMemoryElementName] on Subsystem [MemoryElementName] is no longer Throttled. (DIMM 21)**

**Explanation:** This message is for the use case when an implementation has detected Memory is no longer Throttled.

May also be shown as 816f090c2015ffff or 0x816f090c2015ffff

**Severity:** Info

**Alert Category:** System - Other

**Serviceable:** No

**CIM Information:** **Prefix:** PLAT and **ID:** 0143

**SNMP Trap ID:**

**Automatically notify Support:** No

**User response:** No action; information only.

---

**816f090c-2016ffff [PhysicalMemoryElementName] on Subsystem [MemoryElementName] is no longer Throttled. (DIMM 22)**

**Explanation:** This message is for the use case when an implementation has detected Memory is no longer Throttled.

May also be shown as 816f090c2016ffff or 0x816f090c2016ffff

**Severity:** Info

**Alert Category:** System - Other

**Serviceable:** No

**CIM Information:** **Prefix:** PLAT and **ID:** 0143

**SNMP Trap ID:**

**Automatically notify Support:** No

**User response:** No action; information only.

---

**816f090c-2017ffff [PhysicalMemoryElementName] on Subsystem [MemoryElementName] is no longer Throttled. (DIMM 23)**

**Explanation:** This message is for the use case when an implementation has detected Memory is no longer Throttled.

May also be shown as 816f090c2017ffff or 0x816f090c2017ffff

**Severity:** Info

**Alert Category:** System - Other

**Serviceable:** No

**CIM Information:** **Prefix:** PLAT and **ID:** 0143

**SNMP Trap ID:**

**Automatically notify Support:** No

**User response:** No action; information only.

**816f090c-2018ffff [PhysicalMemoryElementName] on Subsystem [MemoryElementName] is no longer Throttled. (DIMM 24)**

**Explanation:** This message is for the use case when an implementation has detected Memory is no longer Throttled.

May also be shown as 816f090c2018ffff or 0x816f090c2018ffff

**Severity:** Info

**Alert Category:** System - Other

**Serviceable:** No

**CIM Information:** **Prefix:** PLAT and **ID:** 0143

**SNMP Trap ID:**

**Automatically notify Support:** No

**User response:** No action; information only.

---

**816f0a07-0301ffff The Processor [ProcessorElementName] is no longer operating in a Degraded State. (CPU 1)**

**Explanation:** This message is for the use case when an implementation has detected a Processor is no longer running in the Degraded state.

May also be shown as 816f0a070301ffff or 0x816f0a070301ffff

**Severity:** Info

**Alert Category:** Warning - CPU

**Serviceable:** No

**CIM Information:** **Prefix:** PLAT and **ID:** 0039

**SNMP Trap ID:** 42

**Automatically notify Support:** No

**User response:** No action; information only.

---

**816f0a07-0302ffff The Processor [ProcessorElementName] is no longer operating in a Degraded State. (CPU 2)**

**Explanation:** This message is for the use case when an implementation has detected a Processor is no longer running in the Degraded state.

May also be shown as 816f0a070302ffff or 0x816f0a070302ffff

**Severity:** Info

**Alert Category:** Warning - CPU

**Serviceable:** No

**CIM Information:** **Prefix:** PLAT and **ID:** 0039

**SNMP Trap ID:** 42

**Automatically notify Support:** No

**User response:** No action; information only.

**816f0a0c-2001ffff An Over-Temperature Condition has been removed on the [PhysicalMemoryElementName] on Subsystem [MemoryElementName]. (DIMM 1)**

**Explanation:** This message is for the use case when an implementation has detected an Over Temperature Condition for Memory that has been Removed.

May also be shown as 816f0a0c2001ffff or 0x816f0a0c2001ffff

**Severity:** Info

**Alert Category:** Critical - Temperature

**Serviceable:** No

**CIM Information:** **Prefix:** PLAT and **ID:** 0147

**SNMP Trap ID:** 0

**Automatically notify Support:** No

**User response:** No action; information only.

---

**816f0a0c-2002ffff An Over-Temperature Condition has been removed on the [PhysicalMemoryElementName] on Subsystem [MemoryElementName]. (DIMM 2)**

**Explanation:** This message is for the use case when an implementation has detected an Over Temperature Condition for Memory that has been Removed.

May also be shown as 816f0a0c2002ffff or 0x816f0a0c2002ffff

**Severity:** Info

**Alert Category:** Critical - Temperature

**Serviceable:** No

**CIM Information:** **Prefix:** PLAT and **ID:** 0147

**SNMP Trap ID:** 0

**Automatically notify Support:** No

**User response:** No action; information only.

---

**816f0a0c-2003ffff An Over-Temperature Condition has been removed on the [PhysicalMemoryElementName] on Subsystem [MemoryElementName]. (DIMM 3)**

**Explanation:** This message is for the use case when an implementation has detected an Over Temperature Condition for Memory that has been Removed.

May also be shown as 816f0a0c2003ffff or 0x816f0a0c2003ffff

**Severity:** Info

**Alert Category:** Critical - Temperature

**Serviceable:** No

**CIM Information:** **Prefix:** PLAT and **ID:** 0147

**SNMP Trap ID:** 0

**Automatically notify Support:** No

**User response:** No action; information only.

**816f0a0c-2004ffff An Over-Temperature Condition has been removed on the [PhysicalMemoryElementName] on Subsystem [MemoryElementName]. (DIMM 4)**

**Explanation:** This message is for the use case when an implementation has detected an Over Temperature Condition for Memory that has been Removed.

May also be shown as 816f0a0c2004ffff or 0x816f0a0c2004ffff

**Severity:** Info

**Alert Category:** Critical - Temperature

**Serviceable:** No

**CIM Information:** **Prefix:** PLAT and **ID:** 0147

**SNMP Trap ID:** 0

**Automatically notify Support:** No

**User response:** No action; information only.

---

**816f0a0c-2005ffff An Over-Temperature Condition has been removed on the [PhysicalMemoryElementName] on Subsystem [MemoryElementName]. (DIMM 5)**

**Explanation:** This message is for the use case when an implementation has detected an Over Temperature Condition for Memory that has been Removed.

May also be shown as 816f0a0c2005ffff or 0x816f0a0c2005ffff

**Severity:** Info

**Alert Category:** Critical - Temperature

**Serviceable:** No

**CIM Information:** **Prefix:** PLAT and **ID:** 0147

**SNMP Trap ID:** 0

**Automatically notify Support:** No

**User response:** No action; information only.

---

**816f0a0c-2006ffff An Over-Temperature Condition has been removed on the [PhysicalMemoryElementName] on Subsystem [MemoryElementName]. (DIMM 6)**

**Explanation:** This message is for the use case when an implementation has detected an Over Temperature Condition for Memory that has been Removed.

May also be shown as 816f0a0c2006ffff or 0x816f0a0c2006ffff

**Severity:** Info

**Alert Category:** Critical - Temperature

**Serviceable:** No

**CIM Information:** **Prefix:** PLAT and **ID:** 0147

**SNMP Trap ID:** 0

**Automatically notify Support:** No

**User response:** No action; information only.

**816f0a0c-2007ffff An Over-Temperature Condition has been removed on the [PhysicalMemoryElementName] on Subsystem [MemoryElementName]. (DIMM 7)**

**Explanation:** This message is for the use case when an implementation has detected an Over Temperature Condition for Memory that has been Removed.

May also be shown as 816f0a0c2007ffff or 0x816f0a0c2007ffff

**Severity:** Info

**Alert Category:** Critical - Temperature

**Serviceable:** No

**CIM Information:** **Prefix:** PLAT and **ID:** 0147

**SNMP Trap ID:** 0

**Automatically notify Support:** No

**User response:** No action; information only.

---

**816f0a0c-2008ffff An Over-Temperature Condition has been removed on the [PhysicalMemoryElementName] on Subsystem [MemoryElementName]. (DIMM 8)**

**Explanation:** This message is for the use case when an implementation has detected an Over Temperature Condition for Memory that has been Removed.

May also be shown as 816f0a0c2008ffff or 0x816f0a0c2008ffff

**Severity:** Info

**Alert Category:** Critical - Temperature

**Serviceable:** No

**CIM Information:** **Prefix:** PLAT and **ID:** 0147

**SNMP Trap ID:** 0

**Automatically notify Support:** No

**User response:** No action; information only.

---

**816f0a0c-2009ffff An Over-Temperature Condition has been removed on the [PhysicalMemoryElementName] on Subsystem [MemoryElementName]. (DIMM 9)**

**Explanation:** This message is for the use case when an implementation has detected an Over Temperature Condition for Memory that has been Removed.

May also be shown as 816f0a0c2009ffff or 0x816f0a0c2009ffff

**Severity:** Info

**Alert Category:** Critical - Temperature

**Serviceable:** No

**CIM Information:** **Prefix:** PLAT and **ID:** 0147

**SNMP Trap ID:** 0

**Automatically notify Support:** No

**User response:** No action; information only.

**816f0a0c-200affff An Over-Temperature Condition has been removed on the [PhysicalMemoryElementName] on Subsystem [MemoryElementName]. (DIMM 10)**

**Explanation:** This message is for the use case when an implementation has detected an Over Temperature Condition for Memory that has been Removed.

May also be shown as 816f0a0c200affff or 0x816f0a0c200affff

**Severity:** Info

**Alert Category:** Critical - Temperature

**Serviceable:** No

**CIM Information:** **Prefix:** PLAT and **ID:** 0147

**SNMP Trap ID:** 0

**Automatically notify Support:** No

**User response:** No action; information only.

---

**816f0a0c-200bffff An Over-Temperature Condition has been removed on the [PhysicalMemoryElementName] on Subsystem [MemoryElementName]. (DIMM 11)**

**Explanation:** This message is for the use case when an implementation has detected an Over Temperature Condition for Memory that has been Removed.

May also be shown as 816f0a0c200bffff or 0x816f0a0c200bffff

**Severity:** Info

**Alert Category:** Critical - Temperature

**Serviceable:** No

**CIM Information:** **Prefix:** PLAT and **ID:** 0147

**SNMP Trap ID:** 0

**Automatically notify Support:** No

**User response:** No action; information only.

---

**816f0a0c-200cffff An Over-Temperature Condition has been removed on the [PhysicalMemoryElementName] on Subsystem [MemoryElementName]. (DIMM 12)**

**Explanation:** This message is for the use case when an implementation has detected an Over Temperature Condition for Memory that has been Removed.

May also be shown as 816f0a0c200cffff or 0x816f0a0c200cffff

**Severity:** Info

**Alert Category:** Critical - Temperature

**Serviceable:** No

**CIM Information:** **Prefix:** PLAT and **ID:** 0147

**SNMP Trap ID:** 0

**Automatically notify Support:** No

**User response:** No action; information only.

**816f0a0c-200dffff An Over-Temperature Condition has been removed on the [PhysicalMemoryElementName] on Subsystem [MemoryElementName]. (DIMM 13)**

**Explanation:** This message is for the use case when an implementation has detected an Over Temperature Condition for Memory that has been Removed.

May also be shown as 816f0a0c200dffff or 0x816f0a0c200dffff

**Severity:** Info

**Alert Category:** Critical - Temperature

**Serviceable:** No

**CIM Information:** **Prefix:** PLAT and **ID:** 0147

**SNMP Trap ID:** 0

**Automatically notify Support:** No

**User response:** No action; information only.

---

**816f0a0c-200effff An Over-Temperature Condition has been removed on the [PhysicalMemoryElementName] on Subsystem [MemoryElementName]. (DIMM 14)**

**Explanation:** This message is for the use case when an implementation has detected an Over Temperature Condition for Memory that has been Removed.

May also be shown as 816f0a0c200effff or 0x816f0a0c200effff

**Severity:** Info

**Alert Category:** Critical - Temperature

**Serviceable:** No

**CIM Information:** **Prefix:** PLAT and **ID:** 0147

**SNMP Trap ID:** 0

**Automatically notify Support:** No

**User response:** No action; information only.

---

**816f0a0c-200fffff An Over-Temperature Condition has been removed on the [PhysicalMemoryElementName] on Subsystem [MemoryElementName]. (DIMM 15)**

**Explanation:** This message is for the use case when an implementation has detected an Over Temperature Condition for Memory that has been Removed.

May also be shown as 816f0a0c200fffff or 0x816f0a0c200fffff

**Severity:** Info

**Alert Category:** Critical - Temperature

**Serviceable:** No

**CIM Information:** **Prefix:** PLAT and **ID:** 0147

**SNMP Trap ID:** 0

**Automatically notify Support:** No

**User response:** No action; information only.

**816f0a0c-2010ffff An Over-Temperature Condition has been removed on the [PhysicalMemoryElementName] on Subsystem [MemoryElementName]. (DIMM 16)**

**Explanation:** This message is for the use case when an implementation has detected an Over Temperature Condition for Memory that has been Removed.

May also be shown as 816f0a0c2010ffff or 0x816f0a0c2010ffff

**Severity:** Info

**Alert Category:** Critical - Temperature

**Serviceable:** No

**CIM Information:** **Prefix:** PLAT and **ID:** 0147

**SNMP Trap ID:** 0

**Automatically notify Support:** No

**User response:** No action; information only.

---

**816f0a0c-2011ffff An Over-Temperature Condition has been removed on the [PhysicalMemoryElementName] on Subsystem [MemoryElementName]. (DIMM 17)**

**Explanation:** This message is for the use case when an implementation has detected an Over Temperature Condition for Memory that has been Removed.

May also be shown as 816f0a0c2011ffff or 0x816f0a0c2011ffff

**Severity:** Info

**Alert Category:** Critical - Temperature

**Serviceable:** No

**CIM Information:** **Prefix:** PLAT and **ID:** 0147

**SNMP Trap ID:** 0

**Automatically notify Support:** No

**User response:** No action; information only.

---

**816f0a0c-2012ffff An Over-Temperature Condition has been removed on the [PhysicalMemoryElementName] on Subsystem [MemoryElementName]. (DIMM 18)**

**Explanation:** This message is for the use case when an implementation has detected an Over Temperature Condition for Memory that has been Removed.

May also be shown as 816f0a0c2012ffff or 0x816f0a0c2012ffff

**Severity:** Info

**Alert Category:** Critical - Temperature

**Serviceable:** No

**CIM Information:** **Prefix:** PLAT and **ID:** 0147

**SNMP Trap ID:** 0

**Automatically notify Support:** No

**User response:** No action; information only.

**816f0a0c-2013ffff An Over-Temperature Condition has been removed on the [PhysicalMemoryElementName] on Subsystem [MemoryElementName]. (DIMM 19)**

**Explanation:** This message is for the use case when an implementation has detected an Over Temperature Condition for Memory that has been Removed.

May also be shown as 816f0a0c2013ffff or 0x816f0a0c2013ffff

**Severity:** Info

**Alert Category:** Critical - Temperature

**Serviceable:** No

**CIM Information:** **Prefix:** PLAT and **ID:** 0147

**SNMP Trap ID:** 0

**Automatically notify Support:** No

**User response:** No action; information only.

---

**816f0a0c-2014ffff An Over-Temperature Condition has been removed on the [PhysicalMemoryElementName] on Subsystem [MemoryElementName]. (DIMM 20)**

**Explanation:** This message is for the use case when an implementation has detected an Over Temperature Condition for Memory that has been Removed.

May also be shown as 816f0a0c2014ffff or 0x816f0a0c2014ffff

**Severity:** Info

**Alert Category:** Critical - Temperature

**Serviceable:** No

**CIM Information:** **Prefix:** PLAT and **ID:** 0147

**SNMP Trap ID:** 0

**Automatically notify Support:** No

**User response:** No action; information only.

---

**816f0a0c-2015ffff An Over-Temperature Condition has been removed on the [PhysicalMemoryElementName] on Subsystem [MemoryElementName]. (DIMM 21)**

**Explanation:** This message is for the use case when an implementation has detected an Over Temperature Condition for Memory that has been Removed.

May also be shown as 816f0a0c2015ffff or 0x816f0a0c2015ffff

**Severity:** Info

**Alert Category:** Critical - Temperature

**Serviceable:** No

**CIM Information:** **Prefix:** PLAT and **ID:** 0147

**SNMP Trap ID:** 0

**Automatically notify Support:** No

**User response:** No action; information only.

**816f0a0c-2016ffff An Over-Temperature Condition has been removed on the [PhysicalMemoryElementName] on Subsystem [MemoryElementName]. (DIMM 22)**

**Explanation:** This message is for the use case when an implementation has detected an Over Temperature Condition for Memory that has been Removed.

May also be shown as 816f0a0c2016ffff or 0x816f0a0c2016ffff

**Severity:** Info

**Alert Category:** Critical - Temperature

**Serviceable:** No

**CIM Information:** **Prefix:** PLAT and **ID:** 0147

**SNMP Trap ID:** 0

**Automatically notify Support:** No

**User response:** No action; information only.

---

**816f0a0c-2017ffff An Over-Temperature Condition has been removed on the [PhysicalMemoryElementName] on Subsystem [MemoryElementName]. (DIMM 23)**

**Explanation:** This message is for the use case when an implementation has detected an Over Temperature Condition for Memory that has been Removed.

May also be shown as 816f0a0c2017ffff or 0x816f0a0c2017ffff

**Severity:** Info

**Alert Category:** Critical - Temperature

**Serviceable:** No

**CIM Information:** **Prefix:** PLAT and **ID:** 0147

**SNMP Trap ID:** 0

**Automatically notify Support:** No

**User response:** No action; information only.

---

**816f0a0c-2018ffff An Over-Temperature Condition has been removed on the [PhysicalMemoryElementName] on Subsystem [MemoryElementName]. (DIMM 24)**

**Explanation:** This message is for the use case when an implementation has detected an Over Temperature Condition for Memory that has been Removed.

May also be shown as 816f0a0c2018ffff or 0x816f0a0c2018ffff

**Severity:** Info

**Alert Category:** Critical - Temperature

**Serviceable:** No

**CIM Information:** **Prefix:** PLAT and **ID:** 0147

**SNMP Trap ID:** 0

**Automatically notify Support:** No

**User response:** No action; information only.

**816f0a13-0301ffff System [ComputerSystemElementName] has recovered from a Fatal Bus Error. (CPU 1 PECI)**

**Explanation:** This message is for the use case when an implementation has detected that a system has recovered from a Bus Fatal Error.

May also be shown as 816f0a130301ffff or 0x816f0a130301ffff

**Severity:** Info

**Alert Category:** Critical - Other

**Serviceable:** No

**CIM Information:** **Prefix:** PLAT and **ID:** 0245

**SNMP Trap ID:** 50

**Automatically notify Support:** No

**User response:**

1. (Trained technician only) Replace microprocessor n (see Removing a microprocessor and heat sink and Replacing a microprocessor and heat sink).
2. If the problem persists and there is no other CPU with the same error indication, replace the system board.
3. (Trained technician only) Replace the system board (see Removing the system board and Replacing the system board). (n = microprocessor number)

**816f0a13-0302ffff System [ComputerSystemElementName] has recovered from a Fatal Bus Error. (CPU 2 PECI)**

**Explanation:** This message is for the use case when an implementation has detected that a system has recovered from a Bus Fatal Error.

May also be shown as 816f0a130302ffff or 0x816f0a130302ffff

**Severity:** Info

**Alert Category:** Critical - Other

**Serviceable:** No

**CIM Information:** **Prefix:** PLAT and **ID:** 0245

**SNMP Trap ID:** 50

**Automatically notify Support:** No

**User response:**

1. (Trained technician only) Replace microprocessor n (see Removing a microprocessor and heat sink and Replacing a microprocessor and heat sink).
2. If the problem persists and there is no other CPU with the same error indication, replace the system board.
3. (Trained technician only) Replace the system board (see Removing the system board and Replacing the system board). (n = microprocessor number)

# Appendix B. UEFI/POST diagnostic codes

UEFI/POST diagnostic error codes can be generated when the server starts or while the server is running. UEFI/POST codes are logged in the IMM event log in the server.

For each event code, the following fields are displayed:

**Event identifier**
An identifier that uniquely identifies an event.

**Event description**
The logged message string that appears for an event.

**Explanation**
Additional information to explain why the event occurred.

**Severity**
An indication of the level of concern for the condition. The severity is abbreviated in the event log to the first character. The following severities can be displayed.

*Table 17. Event severity levels*

| Severity | Description |
|---|---|
| Informational | An informational message is something that was recorded for audit purposes, usually a user action or a change of states that is normal behavior. |
| Warning | A warning is not as severe as an error, but if possible, the condition should be corrected before it becomes an error. It might also be a condition that requires additional monitoring or maintenance. |
| Error | An error typically indicates a failure or critical condition that impairs service or an expected function. |

**User response**
The actions that you should take to resolve the event.

Perform the steps in the order shown until the problem is solved. After you perform all of the actions that are described in this field, if you cannot solve the problem, contact IBM Support.

**Booting server to F1 setup menu**
In additional to the normal process in booting the server to the F1 setup menu (pressing F1 when `<F1 Setup>` is displayed), there are two other ways for users to choose.

- Method 1
  1. Proceed to the IMM2 website.
  2. Select **Server Management** tab.
  3. Select **Server Power Action**.
  4. Select **Boot Server to F1 Setup**.
- Method 2

  Use Advanced Settings Utility (ASU) program. Command line is shown as follows: **asu.exe set IMM.ForceBootToUefi enable**

© Copyright IBM Corp. 2014

**Attention:**

1. When you press `Ctrl+Alt+Delete` on F1 setup menu panel, the system will reboot automatically and ask you to enter password again.
2. Most F1 Setup settings, which can be load default, are chipset related items or less user input required items. However, when adjusting the iSCSI settings, please be aware that the iSCSI configurations cannot be restored to default. This is to avoid iSCSI items losing its configurations, which may result in the system not being able to boot to the operating system.

The following is the list of the UEFI/POST error codes and suggested actions to correct the detected problems.

---

**I.11002 [I.11002]**

**Explanation:** A processor mismatch has been detected between one or more processors in the system. One or More Mismatched Processors Detected

**Severity:** Error

**User response:** Complete the following steps:

1. This message could occur with messages about other Processor configuration problems. Resolve those messages first.
2. If the problem persists, ensure that matching processors are installed (i.e., matching option part numbers, etc)
3. Verify that the Processor's are installed in the correct sockets according to the service information for this product. If not, correct that problem.
4. Check IBM support site for an applicable service bulletin or UEFI firmware update that applies to this processor error.
5. (Trained Service technician only) Replace mismatching processor. Inspect Processor socket and replace the system board first if socket is damaged.

---

**I.1800A [I.1800A]**

**Explanation:** A mismatch has been detected between the speed at which a QPI link has trained between two or more processor packages. Processors have mismatched Bus Speed

**Severity:** Error

**User response:** Complete the following steps:

1. Verify that the processor is a valid option that is listed as a Server Proven device for this system. If not, remove the Processor and install one listed on the Server Proven website.
2. Verify that matching processors are installed in the correct processor sockets. Correct any mismatch found.
3. Check the IBM support site for an applicable service bulletin or firmware update that applies to this processor error.
4. (Trained Service technician only) Replace the Processor. Inspect Processor socket and replace the system board first if socket is damaged

**I.1800C [I.1800C]**

**Explanation:** A cache type mismatch has been detected for one or more processor packages. Processors have one or more cache levels with mismatched type

**Severity:** Error

**User response:** Complete the following steps:

1. Verify that matching processors are installed in the correct processor sockets. Correct any mismatch found.
2. Check the IBM support site for an applicable service bulletin or firmware update that applies to this processor error.
3. (Trained technician only)Replace the system board

**I.1800D [I.1800D]**

**Explanation:** A cache associativity mismatch has been detected for one or more processor packages. Processors have one or more cache levels with mismatched associativity

**Severity:** Error

**User response:** Complete the following steps:

1. Verify that matching processors are installed in the correct processor sockets. Correct any mismatch found.
2. Check the IBM support site for an applicable service bulletin or firmware update that applies to this processor error.
3. (Trained technician only)Replace the system board

**I.1800E [I.1800E]**

**Explanation:** A processor model mismatch has been detected for one or more processor packages. Processors have mismatched Model Number

**Severity:** Error

**User response:** Complete the following steps:

1. Verify that matching processors are installed in the correct processor sockets. Correct any mismatch found.
2. Check the IBM support site for an applicable service bulletin or firmware update that applies to this Processor error.
3. (Trained technician only)Replace the system board

**I.1800F [I.1800F]**

**Explanation:** A processor family mismatch has been detected for one or more processor packages. Processors have mismatched Family

**Severity:** Error

**User response:** Complete the following steps:

1. Verify that matching processors are installed in the correct processor sockets. Correct any mismatch found.
2. Check the IBM support site for an applicable service bulletin or firmware update that applies to this processor error.
3. (Trained technician only)Replace the system board

**I.18010 [I.18010]**

**Explanation:** A processor stepping mismatch has been detected for one or more processor packages. Processors of the same model have mismatched Stepping ID

**Severity:** Error

**User response:** Complete the following steps:

1. Verify that matching processors are installed in the correct processor sockets. Correct any mismatch found.
2. Check the IBM support site for an applicable service bulletin or firmware update that applies to this processor error.
3. (Trained technician only)Replace the system board

**I.2018002 [I.2018002]**

**Explanation:** The device found at Bus % Device % Function % could not be configured due to resource constraints. The Vendor ID for the device is % and the Device ID is %. OUT_OF_RESOURCES (PCI Option ROM)

**Severity:** Info

**User response:** Complete the following steps:

1. If this PCIe device and/or any attached cables were recently installed, moved, serviced or upgraded, reseat the adapter and any attached cables.
2. Check IBM support site for any applicable service bulletin or UEFI or adapter firmware update that applies to this error. NOTE: It may be necessary to disable unused option ROMs from UEFI F1 setup or ASU or using adapter manufacturer utilities so that adapter firmware can be updated.
3. Move the adapter to a different slot. If a slot is not available or error recurs, replace the adapter.
4. If the adapter was moved to a different slot and the error did not recur, verify that this is not a system limitation. Then replace the system board. Also, if this is not the initial installation and the error persists after adapter replacement, replace the system board.

**I.2018003 [I.2018003]**

**Explanation:** A bad option ROM checksum was detected for the device found at Bus % Device % Function %. The Vendor ID for the device is % and the Device ID is %. ROM CHECKSUM ERROR

**Severity:** Error

**User response:** Complete the following steps:

1. If this PCIe device and/or any attached cables were recently installed, moved, serviced or upgraded, reseat the adapter and any attached cables.
2. Move the adapter to a different system slot, if available.
3. Check IBM support site for any applicable service bulletin or UEFI or adapter firmware update that applies to this error. NOTE: It may be necessary to configure slot to Gen1 or to use special utility software so that adapter firmware can be upgraded. Gen1/Gen2 settings can be configured via F1 Setup -> System Settings -> Devices and I/O Ports -> PCIe Gen1/Gen2/Gen3 Speed Selection, or the ASU Utility.
4. Replace the adapter.

**I.3808004 [I.3808004]**

**Explanation:** The IMM System Event log (SEL) is full. IPMI System Event Log is Full

**Severity:** Info

**User response:** Complete the following steps:

1. Use the IMM Web Interface to clear the event log.
2. If IMM communication is unavailable, use F1 Setup to access System Event Logs Menu and Choose Clear IMM System Event Log and Restart Server.

**I.3818001 [I.3818001]**

**Explanation:** The firmware image capsule signature for the currently booted flash bank is invalid. Current Bank CRTM Capsule Update Signature Invalid

**Severity:** Info

**User response:** Complete the following steps:

1. Reboot the system. Will come up on backup UEFI image. Update the primary UEFI image.
2. If error does not persist no additional recovery action is required.
3. If error persists, or boot is unsuccessful, (Trained service technician only) Replace the system board.

**I.3818002 [I.3818002]**

**Explanation:** The firmware image capsule signature for the non-booted flash bank is invalid. Opposite Bank CRTM Capsule Update Signature Invalid

**Severity:** Info

**User response:** Complete the following steps:

1. Update the backup UEFI image.
2. If error does not persist no additional recovery action is required.
3. If error persists, or boot is unsuccessful, (Trained service technician only) Replace the system board.

**I.3818003 [I.3818003]**

**Explanation:** The CRTM flash driver could not lock the secure flash region. CRTM Could not lock secure flash region

**Severity:** Info

**User response:** Complete the following steps:

1. If system failed to boot successfully, DC cycle the system.
2. If system boots to F1 setup, update the UEFI image and reset bank to primary (if required). If the system boots without error, recovery is complete and no additional action is required.
3. If system fails to boot, or if the firmware update attempt fails, (trained service technician only) replace the system board.

**I.3818009 [I.3818009]**

**Explanation:** The TPM could not be properly initialized. TPMINIT: Fail to initialize TPM chip.

**Severity:** Info

**User response:** Complete the following steps:

1. Check the IBM support site for an applicable service bulletin or firmware update that applies to this error.
2. Reboot the system.
3. If the error continues, replace the system-board assembly (see Removing the system-board assembly and Installing the system-board assembly).

**I.3868000 [I.3868000]**

**Explanation:** IFM: System reset performed to reset adapters. IFM: System reset performed to reset adapters

**Severity:** Info

**User response:** Complete the following steps:

1. Information only; no action is required.

**I.3868003 [I.3868003]**

**Explanation:** IFM: Configuration to large for compatibility mode. IFM: Configuration too large for compatibility mode

**Severity:** Info

**User response:** Complete the following steps:

1. Information only; no action is required.

**I.5100B [I.5100B]**

**Explanation:** An unqualified DIMM serial number has been detected: serial number % found in slot % of memory card %. Unqualified DIMM Serial Number Detected

**Severity:** Info

**User response:** Complete the following steps:

1. If this information event is logged in the IMM event log, the server does not have qualified memory installed.
2. The memory installed may not be covered under warranty.
3. Without qualified memory, speeds supported above industry standards will not be enabled.
4. Please contact your Local Sales Representative or Authorized Business Partner to order qualified memory to replace the unqualified DIMM(s).
5. After you intall qualified memory and power up the server, check to make sure this informational event is not logged again.

**I.58015 [I.58015]**

**Explanation:** Memory spare copy initiated. Spare Copy Started

**Severity:** Info

**User response:** Complete the following steps:

1. Information only; no action is required.

**I.580A4 [I.580A4]**

**Explanation:** Memory population change detected. DIMM Population Change Detected

**Severity:** Info

**User response:** Complete the following steps:

1. If you have added or removed DIMMs to the system, and no additional errors were detected, then please ignore this message.
2. Check system event log for uncorrected DIMM failures and replace those DIMMs.

**I.580A5 [I.580A5]**

**Explanation:** Mirror Fail-over complete. DIMM number % has failed over to to the mirrored copy. DIMM Mirror Fail-over Detected

**Severity:** Info

**User response:** Complete the following steps:

1. Check the system-event log for uncorrected DIMM failures and replace those DIMMs.

**I.580A6 [I.580A6]**

**Explanation:** Memory spare copy has completed successfully. Spare Copy Complete

**Severity:** Info

**User response:** Complete the following steps:

1. If you have added or removed DIMMs to the system, and no additional errors were detected, then please ignore this message.
2. Check system event log for uncorrected DIMM failures and replace those DIMMs.

**S.1100B [S.1100B]**

**Explanation:** CATERR(IERR) has asserted on processor %. Processor CATERR(IERR) has asserted

**Severity:** Error

**User response:** Complete the following steps:

1. Check IBM support site for an applicable service bulletin or UEFI firmware update that applies to this Processor error.
2. (Trained service technician only) If there are multiple Processor's, swap Processor's to move affected Processor to another Processor socket and retry. If problem follows the affected Processor, or this is a single Processor system, replace the Processor.
3. (Trained Service technician only) Inspect Processor socket on each Processor removal and replace system board first if damaged or mis-aligned pins are found. Replace the system board.

**S.1100C [S.1100C]**

**Explanation:** An uncorrectable error has been detected on processor %. Uncorrectable processor error detected

**Severity:** Error

**User response:** Complete the following steps:

1. Check the IBM support site for an applicable service bulletin or firmware update that applies to this error.
2. (Trained service technician only) If there are multiple Processor's, swap Processor's to move affected Processor to another Processor socket and retry. If problem follows the affected Processor, or this is a single Processor system, replace the Processor.
3. (Trained Service technician only) Inspect Processor socket on each Processor removal and replace system board first if damaged or mis-aligned pins are found. Replace the system board.

**S.2011001 [S.2011001]**

**Explanation:** An Uncorrected PCIe Error has Occurred at Bus % Device % Function %. The Vendor ID for the device is % and the Device ID is %. PCI SERR Detected

**Severity:** Error

**User response:** Complete the following steps:

1. Check IBM support site for an applicable device driver, firmware update, version of service information for this product or other information that applies to this error. Load new device driver and any required firmware updates.
2. If this node and/or any attached cables were recently installed, moved, serviced or upgraded, a. Reseat Adapter and any attached cables. b. Reload Device Driver c. If device is not recognized, reconfiguring slot to Gen1 or Gen2 may be required. Gen1/Gen2 settings can be configured via F1 Setup -> System Settings -> Devices and I/O Ports -> PCIe Gen1/Gen2/Gen3 Speed Selection, or the ASU Utility.
3. If problem persists, then remove Adapter Card. If system reboots successfully without the adapter, replace that card.
4. (Trained Service technician only) Replace the system board.
5. (Trained Service technician only) Replace the processor.

**S.2018001 [S.2018001]**

**Explanation:** An Uncorrected PCIe Error has Occurred at Bus % Device % Function %. The Vendor ID for the device is % and the Device ID is %. PCIe Uncorrected Error Detected

**Severity:** Error

**User response:** Complete the following steps:

1. Check IBM support site for an applicable device driver, firmware update, version of service information for this product or other information that applies to this error. Load new device driver and any required firmware updates.
2. If this node and/or any attached cables were recently installed, moved, serviced or upgraded, a. Reseat Adapter and any attached cables. b. Reload Device Driver c. If device is not recognized, reconfiguring slot to Gen1 or Gen2 may be required. Gen1/Gen2 settings can be configured via F1 Setup -> System Settings -> Devices and I/O Ports -> PCIe Gen1/Gen2/Gen3 Speed Selection, or the ASU Utility.
3. If problem persists, then remove Adapter Card. If system reboots successfully without the adapter, replace that card.
4. (Trained Service technician only) Replace the system board.
5. (Trained Service technician only) Replace the processor.

**S.3020007 [S.3020007]**

**Explanation:** A firmware fault has been detected in the UEFI image. Internal UEFI Firmware Fault Detected, System halted

**Severity:** Error

**User response:** Complete the following steps:

1. Check the IBM support site for an applicable service bulletin or firmware update that applies to this error.
2. Update the UEFI image.
3. (Trained service technician only) Replace the system board.

**S.3028002 [S.3028002]**

**Explanation:** Boot permission timeout detected. Boot Permission Negotiation Timeout

**Severity:** Error

**User response:** Complete the following steps:

1. Check CMM/IMM logs for communication errors and resolve.
2. Reseat the system
3. If problem persists contact support

**S.3030007 [S.3030007]**

**Explanation:** A firmware fault has been detected in the UEFI image. Internal UEFI Firmware Fault Detected, System halted

**Severity:** Error

**User response:** Complete the following steps:

1. Check IBM support site for an applicable service bulletin or firmware update that applies to this error.
2. Update the UEFI image.
3. Replace the system board.

**S.3040007 [S.3040007]**

**Explanation:** A firmware fault has been detected in the UEFI image. Internal UEFI Firmware Fault Detected, System halted

**Severity:** Error

**User response:** Complete the following steps:

1. Check IBM support site for an applicable service bulletin or firmware update that applies to this error.
2. Update the UEFI image.
3. Replace the system board.

**S.3050007 [S.3050007]**

**Explanation:** A firmware fault has been detected in the UEFI image. Internal UEFI Firmware Fault Detected, System halted

**Severity:** Error

**User response:** Complete the following steps:

1. Check IBM support site for an applicable service bulletin or firmware update that applies to this error.
2. Update the UEFI image.
3. Replace the system board.

**S.3058004 [S.3058004]**

**Explanation:** A Three Strike boot failure has occurred. The system has booted with default UEFI settings. POST failure has occurred! System booted with default settings.

**Severity:** Error

**User response:** Complete the following steps:

1. This event resets UEFI to the default settings for the next boot. If successful, the Setup Utility is displayed. The original UEFI settings are still present.
2. If you did not intentionally trigger the reboots, check logs for probable cause.
3. Undo recent system changes (settings or devices added). If there were no recent system changes, remove all options, and then remove the CMOS battery for 30 seconds to clear CMOS contents. Verify that the system boots. Then, re-install the options one at a time to locate the problem.
4. Check the IBM support site for an applicable service bulletin or firmware update that applies to this error.
5. Update the UEFI firmware.
6. Remove and re-install CMOS battery for 30 seconds to clear CMOS contents.
7. (Trained service technician only) Replace the system board.

**S.3060007 [S.3060007]**

**Explanation:** A firmware fault has been detected in the UEFI image. Internal UEFI Firmware Fault Detected, System halted

**Severity:** Error

**User response:** Complete the following steps:

1. Check IBM support site for an applicable service bulletin or firmware update that applies to this error.
2. Update the UEFI image.
3. Replace the system board.

**S.3070007 [S.3070007]**

**Explanation:** A firmware fault has been detected in the UEFI image. Internal UEFI Firmware Fault Detected, System halted

**Severity:** Error

**User response:** Complete the following steps:

1. Check IBM support site for an applicable service bulletin or firmware update that applies to this error.
2. Update the UEFI image.
3. Replace the system board.

**S.3108007 [S.3108007]**

**Explanation:** ] The default system settings have been restored. System Configuration Restored to Defaults

**Severity:** Error

**User response:** Complete the following steps:

1. Check IBM support site for an applicable service bulletin or firmware update that applies to this error.

**S.3818004 [S.3818004]**

**Explanation:** The CRTM flash driver could not successfully flash the staging area. A failure occurred. CRTM Update Failed

**Severity:** Error

**User response:** Complete the following steps:

1. Continue booting the sytem. If the system does not reset, manually reset the system.
2. If the error is not reported on the subsequent boot, no additional recovery action is required.
3. If the error persists, continue booting system and update the UEFI image.
4. (Trained service technician only) Replace the system board.

**S.3818007 [S.3818007]**

**Explanation:** The firmware image capsules for both flash banks could not be verified. CRTM image capsule could not be verified

**Severity:** Error

**User response:** Complete the following steps:

1. If system failed to boot successfully, DC cycle system.
2. If system boots to F1 setup, update the UEFI image and reset bank to primary (if required). If the system boots without error, recovery is complete and no additional action is required.
3. If system fails to boot, or if the firmware update attempt fails, (trained service technician only) replace the system board.

**S.51003 [S.51003]**

**Explanation:** An uncorrectable memory error was detected in DIMM slot % on rank %. [S.51003] An uncorrectable memory error was detected on processor % channel %. The failing DIMM within the channel could not be determined. [S.51003] An uncorrectable memory error has been detected. Fatal Memory Error Occurred

**Severity:** Error

**User response:** Complete the following steps:

1. Check IBM support site for an applicable service bulletin or firmware update that applies to this memory error.
2. If the node has recently been installed, moved, serviced, or upgraded, verify that the DIMM is properly seated and visually verify that there is no foreign material in any DIMM connector on that memory channel. If either of these conditions is found, correct and retry with the same DIMM. (Note: Event Log may contain a recent 580A4 event denoting detected change in DIMM population that could be related to this problem.)
3. If no problem is observed on the DIMM connectors and the problem persists, replace the DIMM identified by LightPath and/or event log entry.
4. If problem re-occurs on the same DIMM connector, swap the other DIMMs on the same memory channel across channels one at a time to a different memory channel or Processor. (check service information for this product/Install guide for population requirements for sparing/paring modes). If problem follows a moved DIMM to a different memory channel, replace that DIMM.
5. (Trained service technician only) Remove affected Processor and inspect Processor socket pins for damaged or mis-aligned pins. If damage is found, or this is an upgrade Processor, replace the system board. If there are multiple Processor's, swap Processor's to move affected Procesor to another Processor socket and retry. If problem follows the affected Processor (or there is only one Processor), replace the affected Processor.
6. (Trained technician only)If problem stays with the original DIMM connector, re-inspect DIMM connector for foreign material and remove, if found. If connector is damaged, replace system board

**S.51006 [S.51006]**

**Explanation:** A memory mismatch has been detected. Please verify that the memory configuration is valid. One or More Mismatched DIMMs Detected

**Severity:** Error

**User response:** Complete the following steps:

1. Could follow an uncorrectable memory error or failed memory test. Check the log and service that event first. DIMMs disabled by other errors or actions could cause this event.
2. Verify that the DIMMs are installed in the correct population sequence.
3. Disable memory mirroring and sparing. If this action eliminates the mismatch, check the IBM Support site for information related to this problem.
4. Update UEFI firmware.
5. Replace the DIMM.
6. Replace the processor.

**S.51009 [S.51009]**

**Explanation:** No system memory has been detected. No Memory Detected

**Severity:** Error

**User response:** Complete the following steps:

1. If any memory errors are logged other than this one, take actions indicated for those codes first.
2. If no other memory diagnostic codes appear in the logs, verify that all DIMM connectors are enabled using the Setup utility or the Advanced Settings Utility (ASU).
3. If the problem remains, shut down and remove node from chassis and physically verify that one or more DIMMs are installed and that all DIMMs are installed in the correct population sequence.
4. If DIMMs are present and properly installed, check for any lit DIMM-connector LEDs, and if found, reseat those DIMMs.
5. Reinstall node in chassis, power on node, then check logs for memory diagnostic codes.
6. (Trained technician only) If the problem remains, replace the processor.
7. (Trained technician only) If the problem remains, replace the system board.

**S.58008 [S.58008]**

**Explanation:** A DIMM has failed the POST memory test. DIMM Failed Memory Test

**Severity:** Error

**User response:** Complete the following steps:

1. You must AC-cycle the system to re-enable the affected DIMM connector or re-enable manually using the Setup utility.
2. If the compute node has been recently installed, serviced, moved, or upgraded, check to ensure that DIMMs are firmly seated and that no foreign material can be seen in the DIMM connector. If either condition is observed, correct and retry with the same DIMM. (Note: The event Log might contain a recent 00580A4 event denoting detected change in DIMM population that could be related to this problem.)
3. If problem persists, replace the DIMM identified by LightPath and/or event log entry.
4. If problem recurs on the same DIMM connector, swap the other DIMMs on the same memory channel across channels one at a time to a different memory channel or processor. If problem follows a moved DIMM to a different memory channel, replace that DIMM.
5. Check the IBM support site for an applicable service bulletin or firmware update that applies to this memory error.
6. (Trained service technician only) Remove affected Processor and inspect Processor socket pins for damaged or mis-aligned pins. If damage is found, or this is an upgrade Processor, replace the system board. If there are multiple Processor's, swap Processor's to move affected Procesor to another Processor socket and retry. If problem follows the affected Processor (or there is only one Processor), replace the affected Processor.
7. If problem stays with the original DIMM connector, re-inspect DIMM connector for foreign material and remove, if found. If connector is damaged, replace system board

**S.68005 [S.68005]**

**Explanation:** An error has been detected by the the IIO core logic on Bus %. The Global Fatal Error Status register contains %. The Global Non-Fatal Error Status register contains %. Please check error logs for the presence of additional downstream device error data. Critical IOH-PCI Error

**Severity:** Error

**User response:** Complete the following steps:

1. Check the log for a separate error related to an associated PCIe device and resolve that error.
2. Check the IBM support site for an applicable service bulletin or firmware update for the system or adapter that applies to this error.
3. Replace the I/O device or PCIe adapter
4. (Trained technician only)Replace the system board reported in the error.

**S.680B8 [S.680B8]**

**Explanation:** Internal QPI Link Failure Detected. Internal QPI Link Failure Detected

**Severity:** Error

**User response:** Complete the following steps:

1. Check the IBM support site for an applicable service bulletin or firmware update that applies to this error.
2. Inspect the processor socket for foreign debris or damage. If debris is found, remove the debris.
3. (Trained technician only)If error recurs, or socket damage is found, replace the system board
4. (Trained Service Technician Only) Replace the processor.

**S.680B9 [S.680B9]**

**Explanation:** External QPI Link Failure Detected. External QPI Link Failure Detected

**Severity:** Error

**User response:** Complete the following steps:

1. Check the IBM support site for an applicable service bulletin or firmware update that applies to this error.
2. Inspect the processor socket for foreign debris or damage. If debris is found, remove the debris.
3. (Trained technician only)If error recurs, or socket damage is found, replace the system board

**W.11004 [W.11004]**

**Explanation:** A processor within the system has failed the BIST. Processor Self Test Failure Detected

**Severity:** Error

**User response:** Complete the following steps:

1. If the processor or firmware was just updated, check the IBM support site for an applicable service bulletin or firmware update that applies to this processor error.
2. (Trained service technician only) If there are multiple Processor's, swap Processor's to move affected Processor to another Processor socket and retry. If problem follows the affected Processor, or this is a single Processor processor. Inspect the processor socket on each processor removal and replace system board first if the processor socket is damaged or mis-aligned pins are found.
3. (Trained Service technician only) Inspect Processor socket on each Processor removal and replace system board first if damaged or mis-aligned pins are found. Replace the system board.

**W.3048006 [W.3048006]**

**Explanation:** UEFI has booted from the backup flash bank due to an Automatic Boot Recovery (ABR) event. Automated Boot Recovery, Booting Backup UEFI Image

**Severity:** Warning

**User response:** Complete the following steps:

1. Check the IBM support site for an applicable service bulletin or firmware update that applies to this error.
2. Update the primary UEFI image.
3. Replace the system board.

**W.305000A [W.305000A]**

**Explanation:** An invalid date and time have been detected. RTC Date and Time Incorrect

**Severity:** Warning

**User response:** Complete the following steps:

1. Check IMM/chassis event log. This event should immediately precede 0068002 error. Resolve that event or any other battery related errors.
2. Use F1 Setup to reset date and time. If problem returns after a system reset, replace CMOS battery.
3. If problem persists then check IBM support site for an applicable service bulletin or firmware update that applies to this error.
4. (Trained service technician only) Replace the system board.

**W.3058009 [W.3058009]**

**Explanation:** DRIVER HEALTH PROTOCOL: Missing Configuration. Requires Change Settings From F1. DRIVER HEALTH PROTOCOL: Missing Configuration. Requires Change Settings From F1

**Severity:** Warning

**User response:** Complete the following steps:

1. Go to F1 Setup > System Settings > Settings > Driver Health Status List and find a driver/controller reporting Configuration Required status.
2. Search for the driver menu from System Settings and change settings appropriately.
3. Save settings and restart system.

**W.305800A [W.305800A]**

**Explanation:** DRIVER HEALTH PROTOCOL: Reports 'Failed' Status Controller. DRIVER HEALTH PROTOCOL: Reports 'Failed' Status Controller

**Severity:** Warning

**User response:** Complete the following steps:

1. Reboot the system.
2. If problem persists, switch to backup UEFI or update the current UEFI image.
3. Replace the system board.

**W.305800B [W.305800B]**

**Explanation:** DRIVER HEALTH PROTOCOL: Reports 'Reboot' Required Controller. DRIVER HEALTH PROTOCOL: Reports 'Reboot' Required Controller

**Severity:** Warning

**User response:** Complete the following steps:

1. No action required. The system will reboot at the end of POST.
2. If the problem persists, switch to the backup UEFI image or update the current UEFI image.
3. Replace the system board.

**W.305800C [W.305800C]**

**Explanation:** DRIVER HEALTH PROTOCOL: Reports 'System Shutdown' Required Controller. DRIVER HEALTH PROTOCOL: Reports 'System Shutdown' Required Controller

**Severity:** Warning

**User response:** Complete the following steps:

1. No action required. The system will reboot at the end of POST.
2. If the problem persists, switch to the backup UEFI image or update the current UEFI image.
3. Replace the system board.

**W.305800D [W.305800D]**

**Explanation:** DRIVER HEALTH PROTOCOL: Disconnect Controller Failed. Requires 'Reboot'. DRIVER HEALTH PROTOCOL: Disconnect Controller Failed. Requires 'Reboot'

**Severity:** Warning

**User response:** Complete the following steps:

1. No action required. The system will reboot at the end of POST.
2. If the problem persists, switch to the backup UEFI image or update the current UEFI image.
3. Replace the system board.

**W.305800E [W.305800E]**

**Explanation:** DRIVER HEALTH PROTOCOL: Reports Invalid Health Status Driver. DRIVER HEALTH PROTOCOL: Reports Invalid Health Status Driver

**Severity:** Warning

**User response:** Complete the following steps:

1. No action required. The system will reboot at the end of POST.
2. If the problem persists, switch to the backup UEFI image or update the current UEFI image.
3. Replace the system board.

**W.3808000 [W.3808000]**

**Explanation:** An IMM communication failure has occurred. IMM Communication Failure

**Severity:** Warning

**User response:** Complete the following steps:

1. Reset the IMM from the CMM.
2. Use the CMM to remove auxilliary power from the compute node. This will reboot the compute node.
3. Check the IBM support site for an applicable service bulletin or firmware update that applies to this error.
4. Update the UEFI Firmware.
5. (Trained service technician only) Replace the system board.

**W.3808002 [W.3808002]**

**Explanation:** An error occurred while saving UEFI settings to the IMM. Error Updating System Configuration to IMM

**Severity:** Warning

**User response:** Complete the following steps:

1. Use the Setup Utility to verify and save the settings (which will recover the settings).
2. Reset the IMM from the CMM.
3. Use CMM to remove auxilliary power from the compute node. This will reboot the compute node.
4. Check the IBM support site for an applicable service bulletin or firmware update that applies to this error.
5. Update the IMM Firmware.
6. Use CMOS clear jumper to clear CMOS
7. (Trained service technician only) Replace the system board.

**W.3808003 [W.3808003]**

**Explanation:** Unable to retrieve the system configuration from the IMM. Error Retrieving System Configuration from IMM

**Severity:** Warning

**User response:** Complete the following steps:

1. Use the Setup Utility to verify and save the settings (which will recover the settings).
2. Reset the IMM from the CMM.
3. Use CMM to remove auxilliary power from the compute node. This will reboot the compute node.
4. Check the IBM support site for an applicable service bulletin or firmware update that applies to this error.
5. Update the IMM Firmware.
6. Use CMOS clear jumper to clear CMOS
7. (Trained service technician only) Replace the system board.

**W.3818005 [W.3818005]**

**Explanation:** The CRTM flash driver could not successfully flash the staging area. The update was aborted CRTM Update Aborted

**Severity:** Warning

**User response:** Complete the following steps:

1. Continue booting the system. If system does not reset, manually reset the system.
2. If the error is not reported on the subsequent boot, no additional recovery action is required.
3. If the event persists, continue booting system and update the UEFI image.
4. (Trained service technician only) Replace the system board.

**W.3868001 [W.3868001]**

**Explanation:** IFM: Reset loop avoided - Multiple resets not allowed. IFM: Reset loop avoided - Multiple resets not allowed

**Severity:** Warning

**User response:** Complete the following steps:

1. Update all firmware (including adapter firmware) to the latest levels.
2. If problem persists escalate to the next level of support.

**W.3868002 [W.3868002]**

**Explanation:** IFM: Error communicating with the IMM - IFM may not be deployed correctly. IFM: Error communicating with the IMM - IFM may not be deployed correctly

**Severity:** Error

**User response:** Complete the following steps:

1. Update all firmware (including adapter firmware) to the latest levels.
2. If problem persists escalate to the next level of support.

**W.3938002 [W.3938002]**

**Explanation:** A boot configuration error has been detected. Boot Configuration Error

**Severity:** Warning

**User response:** Complete the following steps:

1. F1 Setup -> Save Settings.
2. Retry OOB configuration update.

**W.50001 [W.50001]**

**Explanation:** A DIMM has been disabled due to an error detected during POST. DIMM Disabled

**Severity:** Info

**User response:** Complete the following steps:

1. If the DIMM was disabled because of a memory fault, follow the procedure for that event.
2. If no memory fault is recorded in the logs and no DIMM connector error LEDs are lit, re-enable the DIMM through the Setup utility or the Advanced Settings Utility (ASU).
3. If the problem persists, Power cycle the compute node from the management console.
4. Reset the IMM to default settings.
5. Reset UEFI to default settings.
6. Update IMM and UEFI firmware.
7. Swap/reseat the DIMM from the disabled slot with a matching DIMM. If the slot remains disabled, (trained technician only) replace system board

**W.58001 [W.58001]**

**Explanation:** The PFA Threshold limit (correctable error logging limit) has been exceeded on DIMM number % at address %. MC5 Status contains % and MC5 Misc contains %. DIMM PFA Threshold Exceeded

**Severity:** Error

**User response:** Complete the following steps:

1. If the compute node has recently been installed, moved, serviced, or upgraded, verify that the DIMM is properly seated and visually verify that there is no foreign material in any DIMM connector on that memory channel. If either of these conditions is found, correct and retry with the same DIMM. (Note: The event Log might contain a recent 580A4 event denoting detected change in DIMM population that could be related to this problem.)
2. Check the IBM support site for an applicable firmware update that applies to this memory error. The release notes will list the known problems the update addresses.
3. If the previous steps do not resolve the problem, at the next maintenance opportunity, swap the DIMMs on the same memory channel one at a time to a different memory channel or Processor. (check service information for this product/Install guide for population requirements for sparing/paring modes). If PFA follows a moved DIMM to any DIMM connector on the different memory channel, replace the moved DIMM.
4. If no problem is observed on the DIMM connectors and the problem persists, replace the DIMM identified by LightPath and/or event log entry.
5. If problem re-occurs on the same DIMM connector, swap the other DIMMs on the same memory channel across channels one at a time to a different memory channel or Processor. (check service information for this product/Install guide for population requirements for sparing/paring modes). If problem follows a moved DIMM to a different memory channel, replace that DIMM.
6. (Trained service technician only) Remove affected Processor and inspect Processor socket pins for damaged or mis-aligned pins. If damage is found, or this is an upgrade Processor, replace the system board. If there are multiple Processor's, swap Processor's to move affected Procesor to another Processor socket and retry. If problem follows the affected Processor (or there is only one Processor), replace the affected Processor.
7. (Trained technician only)If problem stays with the original DIMM connector, re-inspect DIMM connector for foreign material and remove, if found. If connector is damaged, replace system board

**W.58007 [W.58007]**

**Explanation:** Invalid memory configuration (Unsupported DIMM Population) detected. Please verify memory configuration is valid. Unsupported DIMM Population

**Severity:** Error

**User response:** Complete the following steps:

1. Ensure that the DIMM connectors are populated according to the guidelines in the service information for this product.
2. Ensure all DIMM are enabled in the uEFI setup menu.
3. If a DIMM connector error LED is lit, resolve the failure.

**W.580A1 [W.580A1]**

**Explanation:** Invalid memory configuration for Mirror Mode. Please correct memory configuration. Unsupported DIMM Population for Mirror Mode

**Severity:** Error

**User response:** Complete the following steps:

1. If a DIMM connector error LED is lit, resolve the failure.
2. Make sure that the DIMM connectors are correctly populated for mirroring mode.

**W.580A2 [W.580A2]**

**Explanation:** Invalid memory configuration for Sparing Mode. Please correct memory configuration. Unsupported DIMM Population for Spare Mode

**Severity:** Error

**User response:** Complete the following steps:

1. If a DIMM connector error LED is lit, resolve the failure.
2. Make sure that the DIMM connectors are correctly populated for sparing mode, according to the service information for this product.

**W.68002 [W.68002]**

**Explanation:** A CMOS battery error has been detected CMOS Battery Fault

**Severity:** Error

**User response:** Complete the following steps:

1. If the system was recently installed, moved, or serviced, make sure the battery is properly seated.
2. Check the IBM support site for an applicable service bulletin or firmware update that applies to this error.
3. Replace the CMOS battery.
4. (Trained technician only)Replace the system board

# Appendix C. DSA diagnostic test results

After running the DSA diagnostic tests, use this information to resolve any issues that were found.

## DSA Broadcom network test results

The following messages can result when you run the Broadcom network test.

**405-000-000 BRCM:TestControlRegisters Test Passed**

**Explanation:** The test passed.

**Severity:** Event

**Serviceable:** No

**Recoverable:** No

**Automatically notify Support:** No

**Related Links:**

- IBM Support Website
- Latest level of DSA
- Latest level of BMC/IMM

**405-001-000 BRCM:TestMIIRegisters Test Passed**

**Explanation:** The test passed.

**Severity:** Event

**Serviceable:** No

**Recoverable:** No

**Automatically notify Support:** No

**Related Links:**

- IBM Support Website
- Latest level of DSA
- Latest level of BMC/IMM

© Copyright IBM Corp. 2014

**405-002-000 BRCM:TestEEPROM Test Passed**

**Explanation:** The test passed.

**Severity:** Event

**Serviceable:** No

**Recoverable:** No

**Automatically notify Support:** No

**Related Links:**
- IBM Support Website
- Latest level of DSA
- Latest level of BMC/IMM

**405-003-000 BRCM:TestInternalMemory Test Passed**

**Explanation:** The test passed.

**Severity:** Event

**Serviceable:** No

**Recoverable:** No

**Automatically notify Support:** No

**Related Links:**
- IBM Support Website
- Latest level of DSA
- Latest level of BMC/IMM

**405-004-000 BRCM:TestInterrupt Test Passed**

**Explanation:** The test passed.

**Severity:** Event

**Serviceable:** No

**Recoverable:** No

**Automatically notify Support:** No

**Related Links:**
- IBM Support Website
- Latest level of DSA
- Latest level of BMC/IMM

**405-005-000 BRCM:TestLoopbackMAC Test Passed**

**Explanation:** The test passed.

**Severity:** Event

**Serviceable:** No

**Recoverable:** No

**Automatically notify Support:** No

**Related Links:**
- IBM Support Website
- Latest level of DSA
- Latest level of BMC/IMM

**405-006-000 BRCM:TestLoopbackPhysical Test Passed**

**Explanation:** The test passed.

**Severity:** Event

**Serviceable:** No

**Recoverable:** No

**Automatically notify Support:** No

**Related Links:**
- IBM Support Website
- Latest level of DSA
- Latest level of BMC/IMM

**405-007-000 BRCM:TestLEDs Test Passed**

**Explanation:** The test passed.

**Severity:** Event

**Serviceable:** No

**Recoverable:** No

**Automatically notify Support:** No

**Related Links:**
- IBM Support Website
- Latest level of DSA
- Latest level of BMC/IMM

**405-800-000 BRCM:TestControlRegisters Test Aborted**

**Explanation:** The control registers test was canceled.

**Severity:** Warning

**Serviceable:** No

**Recoverable:** No

**Automatically notify Support:** No

**Related Links:**
- IBM Support Website
- Latest level of DSA
- Latest level of BMC/IMM

**405-801-000 BRCM:TestMIIRegisters Test Aborted**

**Explanation:** The MII register test was canceled.

**Severity:** Warning

**Serviceable:** No

**Recoverable:** No

**Automatically notify Support:** No

**Related Links:**
- IBM Support Website
- Latest level of DSA
- Latest level of BMC/IMM

**405-802-000 BRCM:TestEEPROM Test Aborted**

**Explanation:** The EEPROM test was canceled.

**Severity:** Warning

**Serviceable:** No

**Recoverable:** No

**Automatically notify Support:** No

**Related Links:**
- IBM Support Website
- Latest level of DSA
- Latest level of BMC/IMM

**405-803-000 BRCM:TestInternalMemory Test Aborted**

**Explanation:** The internal memory test was canceled.

**Severity:** Warning

**Serviceable:** No

**Recoverable:** No

**Automatically notify Support:** No

**Related Links:**
- IBM Support Website
- Latest level of DSA
- Latest level of BMC/IMM

**405-804-000 BRCM:TestInterrupt Test Aborted**

**Explanation:** The interrupt test was canceled.

**Severity:** Warning

**Serviceable:** No

**Recoverable:** No

**Automatically notify Support:** No

**Related Links:**
- IBM Support Website
- Latest level of DSA
- Latest level of BMC/IMM

**405-805-000 BRCM:TestLoopbackMAC Test Aborted**

**Explanation:** Loopback testing at the MAC layer was canceled.

**Severity:** Warning

**Serviceable:** No

**Recoverable:** No

**Automatically notify Support:** No

**Related Links:**
- IBM Support Website
- Latest level of DSA
- Latest level of BMC/IMM

**405-806-000 BRCM:TestLoopbackPhysical Test Aborted**

**Explanation:** Loopback testing at the physical layer was canceled.

**Severity:** Warning

**Serviceable:** No

**Recoverable:** No

**Automatically notify Support:** No

**Related Links:**
- IBM Support Website
- Latest level of DSA
- Latest level of BMC/IMM

**405-807-000 BRCM:TestLEDs Test Aborted**

**Explanation:** Verification of status LEDs was canceled.

**Severity:** Warning

**Serviceable:** No

**Recoverable:** No

**Automatically notify Support:** No

**Related Links:**
- IBM Support Website
- Latest level of DSA
- Latest level of BMC/IMM

**405-900-000 BRCM:TestControlRegisters Test Failed**

**Explanation:** A failure was detected while testing internal MAC registers

**Severity:** Error

**Serviceable:** Yes

**Recoverable:** No

**Automatically notify Support:** No

**User response:** Complete the following steps:
1. Check component firmware level and upgrade if necessary. The installed firmware level can be found in the DSA Diagnostic Event Log within the Firmware/VPD section for this component.
2. Rerun the test.
3. If failure remains, refer to "Troubleshooting by symptom" in the system "Installation and Service Guide" for the next corrective action.

**Related Links:**
- IBM Support Website
- Latest level of DSA
- Latest level of BMC/IMM

**405-901-000 BRCM:TestMIIRegisters Test Failed**

**Explanation:** A failure was detected while testing internal PHY registers.

**Severity:** Error

**Serviceable:** Yes

**Recoverable:** No

**Automatically notify Support:** No

**User response:** Complete the following steps:

1. Check component firmware level and upgrade if necessary. The installed firmware level can be found in the DSA Diagnostic Event Log within the Firmware/VPD section for this component.
2. Rerun the test.
3. If failure remains, refer to "Troubleshooting by symptom" in the system "Installation and Service Guide" for the next corrective action.

**Related Links:**

- IBM Support Website
- Latest level of DSA
- Latest level of BMC/IMM

**405-902-000 BRCM:TestEEPROM Test Failed**

**Explanation:** A failure was detected while testing non-volatile RAM.

**Severity:** Error

**Serviceable:** Yes

**Recoverable:** No

**Automatically notify Support:** No

**User response:** Complete the following steps:

1. Check component firmware level and upgrade if necessary. The installed firmware level can be found in the DSA Diagnostic Event Log within the Firmware/VPD section for this component.
2. Rerun the test.
3. If failure remains, refer to "Troubleshooting by symptom" in the system "Installation and Service Guide" for the next corrective action.

**Related Links:**

- IBM Support Website
- Latest level of DSA
- Latest level of BMC/IMM

**405-903-000 BRCM:TestInternalMemory Test Failed**

**Explanation:** A failure was detected while testing internal memory.

**Severity:** Error

**Serviceable:** Yes

**Recoverable:** No

**Automatically notify Support:** No

**User response:** Complete the following steps:

1. Check component firmware level and upgrade if necessary. The installed firmware level can be found in the DSA Diagnostic Event Log within the Firmware/VPD section for this component.
2. Rerun the test.
3. If failure remains, refer to "Troubleshooting by symptom" in the system "Installation and Service Guide" for the next corrective action.

**Related Links:**

- IBM Support Website
- Latest level of DSA
- Latest level of BMC/IMM

**405-904-000 BRCM:TestInterrupt Test Failed**

**Explanation:** A failure was detected while testing interrupts.

**Severity:** Error

**Serviceable:** Yes

**Recoverable:** No

**Automatically notify Support:** No

**User response:** Complete the following steps:

1. Check component firmware level and upgrade if necessary. The installed firmware level can be found in the DSA Diagnostic Event Log within the Firmware/VPD section for this component.
2. Rerun the test.
3. If failure remains, refer to "Troubleshooting by symptom" in the system "Installation and Service Guide" for the next corrective action.

**Related Links:**

- IBM Support Website
- Latest level of DSA
- Latest level of BMC/IMM

**405-905-000 BRCM:TestLoopbackMAC Test Failed**

**Explanation:** BRCM:TestLoopbackMAC Test Failed.

**Severity:** Error

**Serviceable:** Yes

**Recoverable:** No

**Automatically notify Support:** No

**User response:** Complete the following steps:

1. Check component firmware level and upgrade if necessary. The installed firmware level can be found in the DSA Diagnostic Event Log within the Firmware/VPD section for this component.
2. Rerun the test.
3. If failure remains, refer to "Troubleshooting by symptom" in the system "Installation and Service Guide" for the next corrective action.

**Related Links:**

- IBM Support Website
- Latest level of DSA
- Latest level of BMC/IMM

**405-906-000 BRCM:TestLoopbackPhysical Test Failed**

**Explanation:** A failure was detected during the loopback test at the physical layer.

**Severity:** Error

**Serviceable:** Yes

**Recoverable:** No

**Automatically notify Support:** No

**User response:** Complete the following steps:

1. Check component firmware level and upgrade if necessary. The installed firmware level can be found in the DSA Diagnostic Event Log within the Firmware/VPD section for this component.
2. Rerun the test.
3. If failure remains, refer to "Troubleshooting by symptom" in the system "Installation and Service Guide" for the next corrective action.

**Related Links:**

- IBM Support Website
- Latest level of DSA
- Latest level of BMC/IMM

**405-907-000 BRCM:TestLEDs Test Failed**

**Explanation:** A failure was detected while verifying operation of the status LEDs.

**Severity:** Error

**Serviceable:** Yes

**Recoverable:** No

**Automatically notify Support:** No

**User response:** Complete the following steps:

1. Check component firmware level and upgrade if necessary. The installed firmware level can be found in the DSA Diagnostic Event Log within the Firmware/VPD section for this component.
2. Rerun the test.
3. If failure remains, refer to "Troubleshooting by symptom" in the system "Installation and Service Guide" for the next corrective action.

**Related Links:**

- IBM Support Website
- Latest level of DSA
- Latest level of BMC/IMM

## DSA Brocade test results

The following messages can result when you run the Brocade test.

**218-000-000 Brocade:MemoryTest Passed**

**Explanation:** The test passed.

**Severity:** Event

**Serviceable:** No

**Recoverable:** No

**Automatically notify Support:** No

**Related Links:**

- IBM Support Website
- Latest level of DSA
- Latest level of BMC/IMM

**218-001-000 Brocade:ExternalLoopbackTest Passed**

**Explanation:** The test passed.

**Severity:** Event

**Serviceable:** No

**Recoverable:** No

**Automatically notify Support:** No

**Related Links:**
- IBM Support Website
- Latest level of DSA
- Latest level of BMC/IMM

**218-002-000 Brocade:SerdesLoopbackTest Passed**

**Explanation:** The test passed.

**Severity:** Event

**Serviceable:** No

**Recoverable:** No

**Automatically notify Support:** No

**Related Links:**
- IBM Support Website
- Latest level of DSA
- Latest level of BMC/IMM

**218-003-000 Brocade:PCILoopbackTest Passed**

**Explanation:** The test passed.

**Severity:** Event

**Serviceable:** No

**Recoverable:** No

**Automatically notify Support:** No

**Related Links:**
- IBM Support Website
- Latest level of DSA
- Latest level of BMC/IMM

**218-004-000 Brocade:ExternalEthLoopbackTest Passed**

**Explanation:** The test passed.

**Severity:** Event

**Serviceable:** No

**Recoverable:** No

**Automatically notify Support:** No

**Related Links:**
- IBM Support Website
- Latest level of DSA
- Latest level of BMC/IMM

**218-005-000 Brocade:SerdesEthLoopbackTest Passed**

**Explanation:** The test passed.

**Severity:** Event

**Serviceable:** No

**Recoverable:** No

**Automatically notify Support:** No

**Related Links:**
- IBM Support Website
- Latest level of DSA
- Latest level of BMC/IMM

**218-006-000 Brocade:InternalLoopbackTest Passed**

**Explanation:** The test passed.

**Severity:** Event

**Serviceable:** No

**Recoverable:** No

**Automatically notify Support:** No

**Related Links:**
- IBM Support Website
- Latest level of DSA
- Latest level of BMC/IMM

**218-800-000 Brocade:MemoryTest Aborted**

**Explanation:** The test was canceled.

**Severity:** Warning

**Serviceable:** No

**Recoverable:** No

**Automatically notify Support:** No

**Related Links:**
- IBM Support Website
- Latest level of DSA
- Latest level of BMC/IMM

**218-801-000 Brocade:ExternalLoopbackTest Aborted**

**Explanation:** The test was canceled.

**Severity:** Warning

**Serviceable:** No

**Recoverable:** No

**Automatically notify Support:** No

**Related Links:**
- IBM Support Website
- Latest level of DSA
- Latest level of BMC/IMM

**218-802-000 Brocade:SerdesLoopbackTest Aborted**

**Explanation:** The test was canceled.

**Severity:** Warning

**Serviceable:** No

**Recoverable:** No

**Automatically notify Support:** No

**Related Links:**
- IBM Support Website
- Latest level of DSA
- Latest level of BMC/IMM

**218-803-000 Brocade:PCILoopbackTest Aborted**

**Explanation:** The test was canceled.

**Severity:** Warning

**Serviceable:** No

**Recoverable:** No

**Automatically notify Support:** No

**Related Links:**
- IBM Support Website
- Latest level of DSA
- Latest level of BMC/IMM

**218-804-000 Brocade:ExternalEthLoopbackTest Aborted**

**Explanation:** The test was canceled.

**Severity:** Warning

**Serviceable:** No

**Recoverable:** No

**Automatically notify Support:** No

**Related Links:**
- IBM Support Website
- Latest level of DSA
- Latest level of BMC/IMM

**218-805-000 Brocade:SerdesEthLoopbackTest Aborted**

**Explanation:** The test was canceled.

**Severity:** Warning

**Serviceable:** No

**Recoverable:** No

**Automatically notify Support:** No

**Related Links:**
- IBM Support Website
- Latest level of DSA
- Latest level of BMC/IMM

**218-806-000 Brocade:InternalLoopbackTest Aborted**

**Explanation:** The test was canceled.

**Severity:** Warning

**Serviceable:** No

**Recoverable:** No

**Automatically notify Support:** No

**Related Links:**
- IBM Support Website
- Latest level of DSA
- Latest level of BMC/IMM

**218-900-000 Brocade:MemoryTest Failed**

**Explanation:** A failure was detected while testing the adapter memory.

**Severity:** Error

**Serviceable:** Yes

**Recoverable:** No

**Automatically notify Support:** No

**User response:** Complete the following steps:
1. Rerun the test.
2. Verify whether the firmware is at proper level.
3. Rerun the test.
4. If the problem remains, contact your IBM technical-support representative.

**Related Links:**
- IBM Support Website
- Latest level of DSA
- Latest level of BMC/IMM

**218-901-000 Brocade:ExternalLoopbackTest Failed**

**Explanation:** A failure was detected during the Loopback test.

**Severity:** Error

**Serviceable:** Yes

**Recoverable:** No

**Automatically notify Support:** No

**User response:** Complete the following steps:
1. Check cable connections.
2. Rerun the test.
3. Verify whether the firmware is at proper level.
4. Rerun the test.
5. If the problem remains, contact your IBM technical-support representative.

**Related Links:**
- IBM Support Website
- Latest level of DSA
- Latest level of BMC/IMM

**218-902-000 Brocade:SerdesLoopbackTest Failed**

**Explanation:** A failure was detected during the Loopback test.

**Severity:** Error

**Serviceable:** Yes

**Recoverable:** No

**Automatically notify Support:** No

**User response:** Complete the following steps:

1. Rerun the test.
2. Verify whether the firmware is at proper level.
3. Rerun the test.
4. If the problem remains, contact your IBM technical-support representative.

**Related Links:**

- IBM Support Website
- Latest level of DSA
- Latest level of BMC/IMM

**218-903-000 Brocade:PCILoopbackTest Failed**

**Explanation:** A failure was detected during the Loopback test.

**Severity:** Error

**Serviceable:** Yes

**Recoverable:** No

**Automatically notify Support:** No

**User response:** Complete the following steps:

1. Rerun the test.
2. Verify whether the firmware is at proper level.
3. Rerun the test.
4. If the problem remains, contact your IBM technical-support representative.

**Related Links:**

- IBM Support Website
- Latest level of DSA
- Latest level of BMC/IMM

**218-904-000 Brocade:ExternalEthLoopbackTest Failed**

**Explanation:** A failure was detected during the Loopback test.

**Severity:** Error

**Serviceable:** Yes

**Recoverable:** No

**Automatically notify Support:** No

**User response:** Complete the following steps:

1. Check or replace SFP/cable.
2. Rerun the test.
3. Verify whether the firmware is at proper level.
4. Rerun the test.
5. If the problem remains, contact your IBM technical-support representative.

**Related Links:**

- IBM Support Website
- Latest level of DSA
- Latest level of BMC/IMM

**218-905-000 Brocade:SerdesEthLoopbackTest Failed**

**Explanation:** A failure was detected during the Loopback test.

**Severity:** Error

**Serviceable:** Yes

**Recoverable:** No

**Automatically notify Support:** No

**User response:** Complete the following steps:

1. Rerun the test.
2. Verify whether the firmware is at proper level.
3. Rerun the test.
4. If the problem remains, contact your IBM technical-support representative.

**Related Links:**

- IBM Support Website
- Latest level of DSA
- Latest level of BMC/IMM

**218-906-000 Brocade:InternalLoopbackTest Failed**

**Explanation:** A failure was detected during the Loopback test.

**Severity:** Error

**Serviceable:** Yes

**Recoverable:** No

**Automatically notify Support:** No

**User response:** Complete the following steps:

1. Rerun the test.
2. Verify whether the firmware is at proper level.
3. Rerun the test.
4. If the problem remains, contact your IBM technical-support representative.

**Related Links:**

- IBM Support Website
- Latest level of DSA
- Latest level of BMC/IMM

## DSA checkpoint panel test results

The following messages can result when you run the checkpoint panel test.

**180-000-000 Check-point Panel Test Passed**

**Explanation:** Check-point Panel Test Passed.

**Severity:** Event

**Serviceable:** No

**Recoverable:** No

**Automatically notify Support:** No

**Related Links:**

- IBM Support Website
- Latest level of DSA
- Latest level of BMC/IMM

**180-801-000 Check-point Panel Test Aborted**

**Explanation:** Check-point Panel Test Aborted. BMC is unable to verify that the operator information panel cable is connected.

**Severity:** Warning

**Serviceable:** Yes

**Recoverable:** No

**Automatically notify Support:** No

**User response:** Complete the following steps:

1. Inspect and reseat operator information panel cable at both ends.
2. Verify that the Baseboard Management Controller (BMC) is working.
3. Run the test again.
4. If failure remains, refer to "Troubleshooting by symptom" in the system "Installation and Service Guide" for the next corrective action.

**Related Links:**
- IBM Support Website
- Latest level of DSA
- Latest level of BMC/IMM

---

**180-901-000 Check-point Panel Test Failed**

**Explanation:** Check-point Panel Test Failed. Operator reported incorrect display.

**Severity:** Error

**Serviceable:** Yes

**Recoverable:** No

**Automatically notify Support:** No

**User response:** Complete the following steps:
1. Check the operator information panel cabling for loose or broken connections at both ends or damage to the cable.
2. Replace the information panel cable if damage is present.
3. Run the test again.
4. Replace the operator information panel assembly.
5. Run the test again.
6. If failure remains, refer to "Troubleshooting by symptom" in the system "Installation and Service Guide" for the next corrective action.

**Related Links:**
- IBM Support Website
- Latest level of DSA
- Latest level of BMC/IMM

## DSA CPU stress test results

The following messages can result when you run the CPU stress test.

---

**089-000-000 CPU Stress Test Passed**

**Explanation:** CPU Stress Test Passed.

**Severity:** Event

**Serviceable:** No

**Recoverable:** No

**Automatically notify Support:** No

**Related Links:**
- IBM Support Website
- Latest level of DSA
- Latest level of BMC/IMM

**089-801-000 CPU Stress Test Aborted**

**Explanation:** CPU Stress Test Aborted. Internal Program Error.

**Severity:** Warning

**Serviceable:** Yes

**Recoverable:** No

**Automatically notify Support:** No

**User response:** Complete the following steps:

1. Turn off and restart the system.
2. Make sure that the DSA Diagnostic code is at the latest level.
3. Run the test again.
4. Check system firmware level and upgrade if necessary. The installed firmware level can be found in the DSA Diagnostic Event Log within the Firmware/VPD section for this component. The latest level firmware for this component can be found in reference to this system type at the IBM Support website.
5. Run the test again.
6. If the system has stopped responding, turn off and restart the system and then run the test again.
7. If failure remains, refer to "Troubleshooting by symptom" in the system "Installation and Service Guide" for the next corrective action.

**Related Links:**

- IBM Support Website
- Latest level of DSA
- Latest level of BMC/IMM

**089-802-000 CPU Stress Test Aborted**

**Explanation:** CPU Stress Test Aborted. System resource unavailability error.

**Severity:** Warning

**Serviceable:** Yes

**Recoverable:** No

**Automatically notify Support:** No

**User response:** Complete the following steps:

1. Turn off and restart the system.
2. Make sure that the DSA Diagnostic code is at the latest level.
3. Run the test again.
4. Check system firmware level and upgrade if necessary. The installed firmware level can be found in the DSA Diagnostic Event Log within the Firmware/VPD section for this component.
5. Run the test again.
6. If the system has stopped responding, turn off and restart the system and then run the test again.
7. If failure remains, refer to "Troubleshooting by symptom" in the system "Installation and Service Guide" for the next corrective action.

**Related Links:**

- IBM Support Website
- Latest level of DSA
- Latest level of BMC/IMM

**089-803-000 CPU Stress Test Aborted**

**Explanation:** CPU Stress Test Aborted. Memory size is insufficient to run the test. At least 1GB is required.

**Severity:** Warning

**Serviceable:** Yes

**Recoverable:** No

**Automatically notify Support:** No

**Related Links:**

- IBM Support Website
- Latest level of DSA
- Latest level of BMC/IMM

**089-804-000 CPU Stress Test Aborted**

**Explanation:** CPU Stress Test Aborted. User pressed Ctrl-C.

**Severity:** Warning

**Serviceable:** Yes

**Recoverable:** No

**Automatically notify Support:** No

**Related Links:**

- IBM Support Website
- Latest level of DSA
- Latest level of BMC/IMM

**089-901-000 CPU Stress Test Failed**

**Explanation:** CPU Stress Test Failed.

**Severity:** Error

**Serviceable:** Yes

**Recoverable:** No

**Automatically notify Support:** No

**User response:** Complete the following steps:

1. If the system has stopped responding, turn off and restart the system and then run the test again.
2. Make sure that the DSA Diagnostic code is at the latest level.
3. Run the test again.
4. Check system firmware level and upgrade if necessary. The installed firmware level can be found in the DSA Diagnostic Event Log within the Firmware/VPD section for this component.
5. Run the test again.
6. If the system has stopped responding, turn off and restart the system and then run the test again.
7. If failure remains, refer to "Troubleshooting by symptom" in the system "Installation and Service Guide" for the next corrective action.

**Related Links:**

- IBM Support Website
- Latest level of DSA
- Latest level of BMC/IMM

## DSA Emulex adapter test results

The following messages can result when you run the Emulex adapter test.

**516-000-000 ELXUCNA: NIC MAC LoopBackTest Passed**

**Explanation:** The test passed.

**Severity:** Event

**Serviceable:** No

**Recoverable:** No

**Automatically notify Support:** No

**Related Links:**
- IBM Support Website
- Latest level of DSA
- Latest level of BMC/IMM

**516-001-000 ELXUCNA: NIC PHY LoopBackTest Passed**

**Explanation:** The test passed.

**Severity:** Event

**Serviceable:** No

**Recoverable:** No

**Automatically notify Support:** No

**Related Links:**
- IBM Support Website
- Latest level of DSA
- Latest level of BMC/IMM

**516-002-000 ELXUCNA: ELXUCNA: NIC LED(Beacon)Test Passed**

**Explanation:** The test passed.

**Severity:** Event

**Serviceable:** No

**Recoverable:** No

**Automatically notify Support:** No

**Related Links:**
- IBM Support Website
- Latest level of DSA
- Latest level of BMC/IMM

**516-800-000 ELXUCNA: NIC MAC LoopBackTest Aborted**

**Explanation:** Loopback testing at the MAC layer was canceled.

**Severity:** Warning

**Serviceable:** No

**Recoverable:** No

**Automatically notify Support:** No

**Related Links:**
- IBM Support Website
- Latest level of DSA
- Latest level of BMC/IMM

**516-801-000 ELXUCNA: NIC PHY LoopBackTest Aborted**

**Explanation:** Loopback testing at the physical layer was canceled.

**Severity:** Warning

**Serviceable:** No

**Recoverable:** No

**Automatically notify Support:** No

**Related Links:**
- IBM Support Website
- Latest level of DSA
- Latest level of BMC/IMM

**516-802-000 ELXUCNA: ELXUCNA: NIC LED(Beacon)Test Aborted**

**Explanation:** Verification of status LEDs was canceled.

**Severity:** Warning

**Serviceable:** No

**Recoverable:** No

**Automatically notify Support:** No

**Related Links:**
- IBM Support Website
- Latest level of DSA
- Latest level of BMC/IMM

**516-900-000 ELXUCNA: NIC MAC LoopBackTest Failed**

**Explanation:** A failure was detected during the loopback test at the MAC layer.

**Severity:** Error

**Serviceable:** Yes

**Recoverable:** No

**Automatically notify Support:** No

**User response:** Complete the following steps:

1. Check component firmware level and upgrade if necessary. The installed firmware level can be found in the DSA Diagnostic Event Log within the Firmware/VPD section for this component.
2. Rerun the test.
3. If failure remains, refer to "Troubleshooting by symptom" in the system "Installation and Service Guide" for the next corrective action.

**Related Links:**

- IBM Support Website
- Latest level of DSA
- Latest level of BMC/IMM

**516-901-000 ELXUCNA: NIC PHY LoopBackTest Failed**

**Explanation:** A failure was detected during the loopback test at the physical layer.

**Severity:** Error

**Serviceable:** Yes

**Recoverable:** No

**Automatically notify Support:** No

**User response:** Complete the following steps:

1. Check component firmware level and upgrade if necessary. The installed firmware level can be found in the DSA Diagnostic Event Log within the Firmware/VPD section for this component.
2. Rerun the test.
3. If failure remains, refer to "Troubleshooting by symptom" in the system "Installation and Service Guide" for the next corrective action.

**Related Links:**

- IBM Support Website
- Latest level of DSA
- Latest level of BMC/IMM

**516-902-000 ELXUCNA: ELXUCNA: NIC LED(Beacon)Test Failed**

**Explanation:** A failure was detected while verifying operation of the status LEDs.

**Severity:** Error

**Serviceable:** Yes

**Recoverable:** No

**Automatically notify Support:** No

**User response:** Complete the following steps:

1. Check component firmware level and upgrade if necessary. The installed firmware level can be found in the DSA Diagnostic Event Log within the Firmware/VPD section for this component.
2. Rerun the test.
3. If failure remains, refer to "Troubleshooting by symptom" in the system "Installation and Service Guide" for the next corrective action.

**Related Links:**

- IBM Support Website
- Latest level of DSA
- Latest level of BMC/IMM

## DSA EXA port ping test results

The following messages can result when you run the EXA port ping test.

**401-000-000 EXA Port Ping Test Passed**

**Explanation:** EXA Port Ping Test Passed.

**Severity:** Event

**Serviceable:** No

**Recoverable:** No

**Automatically notify Support:** No

**Related Links:**

- IBM Support Website
- Latest level of DSA
- Latest level of BMC/IMM

**401-801-000 EXA Port Ping Test Aborted**

**Explanation:** EXA Port Ping Test Aborted. Unable to get device base address.

**Severity:** Warning

**Serviceable:** Yes

**Recoverable:** No

**Automatically notify Support:** No

**User response:** Complete the following steps:

1. Remove power cables, wait for 45 seconds, reconnect and rerun the test.
2. Make sure that the scalability cable connections are as per specification.
3. Make sure that DSA and BIOS/uEFI are at the latest level.
4. If the problem remains, contact your technical-service representative.

**Related Links:**

- IBM Support Website
- Latest level of DSA
- Latest level of BMC/IMM

**401-802-000 EXA Port Ping Test Aborted**

**Explanation:** EXA Port Ping Test Aborted. Port connections may not be correct.

**Severity:** Warning

**Serviceable:** Yes

**Recoverable:** No

**Automatically notify Support:** No

**User response:** Complete the following steps:

1. Remove power cables, wait for 45 seconds, reconnect and rerun the test.
2. Make sure that the scalability cable connections are as per specification.
3. Make sure that DSA and BIOS/uEFI are at the latest level.
4. If the problem remains, contact your technical-service representative.

**Related Links:**

- IBM Support Website
- Latest level of DSA
- Latest level of BMC/IMM

**401-901-001 EXA Port Ping Test Failed**

**Explanation:** EXA Port Ping Test Failed.

**Severity:** Error

**Serviceable:** Yes

**Recoverable:** No

**Automatically notify Support:** No

**User response:** Complete the following steps:

1. Remove power cables, wait for 45 seconds, reconnect and rerun the test.
2. Make sure that the scalability cable connections are as per specification.
3. Check scalability cables for loose connections.
4. Replace the scalability cable(s) for specified port(s).
5. If the problem remains, contact your technical-service representative.

**Related Links:**

- IBM Support Website
- Latest level of DSA
- Latest level of BMC/IMM

## DSA hard drive test results

The following messages can result when you run the hard drive test.

**217-000-000 HDD Test Passed**

**Explanation:** HDD Stress Test Passed.

**Severity:** Event

**Serviceable:** No

**Recoverable:** No

**Automatically notify Support:** No

**Related Links:**

- IBM Support Website
- Latest level of DSA
- Latest level of BMC/IMM

**217-800-000 HDD Test Aborted**

**Explanation:** HDD Test Aborted. The test was canceled.

**Severity:** Warning

**Serviceable:** Yes

**Recoverable:** No

**Automatically notify Support:** No

**User response:** Complete the following steps:

1. Check cable connections.
2. Rerun the test.
3. Verify that Hard drive supports self test and self test logging.
4. If the problem remains, contact your technical-support representative.

**Related Links:**

- IBM Support Website
- Latest level of DSA
- Latest level of BMC/IMM

**217-900-000 HDD Test Failed**

**Explanation:** HDD Test Failed. The hard drive self-test detected a failure.

**Severity:** Error

**Serviceable:** Yes

**Recoverable:** No

**Automatically notify Support:** No

**User response:** Complete the following steps:

1. Check cable connections.
2. Rerun the test.
3. Verify the firmware is at the latest level.
4. Rerun the test.
5. If the problem remains, contact your technical-support representative.

**Related Links:**

- IBM Support Website
- Latest level of DSA
- Latest level of BMC/IMM

## DSA Intel network test results

The following messages can result when you run the Intel network test.

**406-000-000 IANet:Registers Test Passed**

**Explanation:** The test passed.

**Severity:** Event

**Serviceable:** No

**Recoverable:** No

**Automatically notify Support:** No

**Related Links:**
- IBM Support Website
- Latest level of DSA
- Latest level of BMC/IMM

**406-001-000 IANet:EEPROM Test Passed**

**Explanation:** The test passed.

**Severity:** Event

**Serviceable:** No

**Recoverable:** No

**Automatically notify Support:** No

**Related Links:**
- IBM Support Website
- Latest level of DSA
- Latest level of BMC/IMM

**406-002-000 IANet:FIFO Test Passed**

**Explanation:** The test passed.

**Severity:** Event

**Serviceable:** No

**Recoverable:** No

**Automatically notify Support:** No

**Related Links:**
- IBM Support Website
- Latest level of DSA
- Latest level of BMC/IMM

**406-003-000 IANet:Interrupts Test Passed**

**Explanation:** The test passed.

**Severity:** Event

**Serviceable:** No

**Recoverable:** No

**Automatically notify Support:** No

**Related Links:**
- IBM Support Website
- Latest level of DSA
- Latest level of BMC/IMM

**406-004-000 IANet:Loopback Test Passed**

**Explanation:** The test passed.

**Severity:** Event

**Serviceable:** No

**Recoverable:** No

**Automatically notify Support:** No

**Related Links:**
- IBM Support Website
- Latest level of DSA
- Latest level of BMC/IMM

**406-800-000 IANet:Registers Test Aborted**

**Explanation:** Registers test was canceled.

**Severity:** Warning

**Serviceable:** No

**Recoverable:** No

**Automatically notify Support:** No

**Related Links:**
- IBM Support Website
- Latest level of DSA
- Latest level of BMC/IMM

**406-801-000 IANet:EEPROM Test Aborted**

**Explanation:** EEPROM test was canceled.

**Severity:** Warning

**Serviceable:** No

**Recoverable:** No

**Automatically notify Support:** No

**Related Links:**
- IBM Support Website
- Latest level of DSA
- Latest level of BMC/IMM

**406-802-000 IANet:FIFO Test Aborted**

**Explanation:** FIFO test was canceled.

**Severity:** Warning

**Serviceable:** No

**Recoverable:** No

**Automatically notify Support:** No

**Related Links:**
- IBM Support Website
- Latest level of DSA
- Latest level of BMC/IMM

**406-803-000 IANet:Interrupts Test Aborted**

**Explanation:** Interrupt test was canceled.

**Severity:** Warning

**Serviceable:** No

**Recoverable:** No

**Automatically notify Support:** No

**Related Links:**
- IBM Support Website
- Latest level of DSA
- Latest level of BMC/IMM

**406-804-000 IANet:Loopback Test Aborted**

**Explanation:** Loopback test was canceled.

**Severity:** Warning

**Serviceable:** No

**Recoverable:** No

**Automatically notify Support:** No

**Related Links:**

- IBM Support Website
- Latest level of DSA
- Latest level of BMC/IMM

**406-900-000 IANet:Registers Test Failed**

**Explanation:** A failure was detected during the Registers test.

**Severity:** Error

**Serviceable:** Yes

**Recoverable:** No

**Automatically notify Support:** No

**User response:** Complete the following steps:

1. Check component firmware level and upgrade if necessary. The installed firmware level can be found in the DSA Diagnostic Event Log within the Firmware/VPD section for this component.
2. Rerun the test.
3. If failure remains, refer to "Troubleshooting by symptom" in the system "Installation and Service Guide" for the next corrective action.

**Related Links:**

- IBM Support Website
- Latest level of DSA
- Latest level of BMC/IMM

**406-901-000 IANet:EEPROM Test Failed**

**Explanation:** A failure was detected during the EEPROM test.

**Severity:** Error

**Serviceable:** Yes

**Recoverable:** No

**Automatically notify Support:** No

**User response:** Complete the following steps:

1. Check component firmware level and upgrade if necessary. The installed firmware level can be found in the DSA Diagnostic Event Log within the Firmware/VPD section for this component.
2. Rerun the test.
3. If failure remains, refer to "Troubleshooting by symptom" in the system "Installation and Service Guide" for the next corrective action.

**Related Links:**

- IBM Support Website
- Latest level of DSA
- Latest level of BMC/IMM

**406-902-000 IANet:FIFO Test Failed**

**Explanation:** A failure was detected during the FIFO test.

**Severity:** Error

**Serviceable:** Yes

**Recoverable:** No

**Automatically notify Support:** No

**User response:** Complete the following steps:

1. Check component firmware level and upgrade if necessary. The installed firmware level can be found in the DSA Diagnostic Event Log within the Firmware/VPD section for this component.
2. Rerun the test.
3. If failure remains, refer to "Troubleshooting by symptom" in the system "Installation and Service Guide" for the next corrective action.

**Related Links:**

- IBM Support Website
- Latest level of DSA
- Latest level of BMC/IMM

**406-903-000 IANet:Interrupts Test Failed**

**Explanation:** A failure was detected during the Interrupt test.

**Severity:** Error

**Serviceable:** Yes

**Recoverable:** No

**Automatically notify Support:** No

**User response:** Complete the following steps:

1. Check component firmware level and upgrade if necessary. The installed firmware level can be found in the DSA Diagnostic Event Log within the Firmware/VPD section for this component.
2. Rerun the test.
3. Check interrupt assignments in the PCI Hardware section of the DSA Diagnostic Log. If the ethernet device is sharing interrupts, if possible modify the interrupt assignments using F1 Setup to assign a unique interrupt to the device.
4. Rerun the test.
5. If failure remains, refer to "Troubleshooting by symptom" in the system "Installation and Service Guide" for the next corrective action.

**Related Links:**

- IBM Support Website
- Latest level of DSA
- Latest level of BMC/IMM

**406-904-000 IANet:Loopback Test Failed**

**Explanation:** A failure was detected during the Loopback test.

**Severity:** Error

**Serviceable:** Yes

**Recoverable:** No

**Automatically notify Support:** No

**User response:** Complete the following steps:

1. Check the Ethernet cable for damage and ensure correct cable type and attachment.
2. Check component firmware level and upgrade if necessary. The installed firmware level can be found in the DSA Diagnostic Event Log within the Firmware/VPD section for this component.
3. Rerun the test.
4. If failure remains, refer to "Troubleshooting by symptom" in the system "Installation and Service Guide" for the next corrective action.

**Related Links:**

- IBM Support Website
- Latest level of DSA
- Latest level of BMC/IMM

## DSA LSI hard drive test results

The following messages can result when you run the LSI hard drive test.

**407-000-000 LSIESG:DiskDefaultDiagnostic Test Passed**

**Explanation:** The test passed.

**Severity:** Event

**Serviceable:** No

**Recoverable:** No

**Automatically notify Support:** No

**Related Links:**

- IBM Support Website
- Latest level of DSA
- Latest level of BMC/IMM

**407-800-000 LSIESG:DiskDefaultDiagnostic Test Aborted**

**Explanation:** The test was canceled.

**Severity:** Warning

**Serviceable:** No

**Recoverable:** No

**Automatically notify Support:** No

**Related Links:**
- IBM Support Website
- Latest level of DSA
- Latest level of BMC/IMM

**407-900-000 LSIESG:DiskDefaultDiagnostic Test Failed**

**Explanation:** The hard drive self-test detected a failure.

**Severity:** Error

**Serviceable:** Yes

**Recoverable:** No

**Automatically notify Support:** No

**User response:** Complete the following steps:
1. Check cable connections.
2. Rerun the test.
3. Verify whether the firmware is at the latest level.
4. Rerun the test.
5. If the problem remains, contact your IBM technical-support representative.

**Related Links:**
- IBM Support Website
- Latest level of DSA
- Latest level of BMC/IMM

## DSA Mellanox adapter test results

The following messages can result when you run the Mellanox adapter test.

**408-000-000 MLNX:MLNX_DiagnosticTestEthernetPort Test Passed**

**Explanation:** Port Test Passed.

**Severity:** Event

**Serviceable:** No

**Recoverable:** No

**Automatically notify Support:** No

**Related Links:**
- IBM Support Website
- Latest level of DSA
- Latest level of BMC/IMM

**408-001-000 MLNX:MLNX_DiagnosticTestIBPort Test Passed**

**Explanation:** Port Test Passed.

**Severity:** Event

**Serviceable:** No

**Recoverable:** No

**Automatically notify Support:** No

**Related Links:**
- IBM Support Website
- Latest level of DSA
- Latest level of BMC/IMM

**408-800-000 MLNX:MLNX_DiagnosticTestEthernetPort Test Aborted**

**Explanation:** Port Test was canceled.

**Severity:** Warning

**Serviceable:** No

**Recoverable:** No

**Automatically notify Support:** No

**Related Links:**
- IBM Support Website
- Latest level of DSA
- Latest level of BMC/IMM

**408-801-000 MLNX:MLNX_DiagnosticTestIBPort Test Aborted**

**Explanation:** Port Test was canceled.

**Severity:** Warning

**Serviceable:** No

**Recoverable:** No

**Automatically notify Support:** No

**Related Links:**

- IBM Support Website
- Latest level of DSA
- Latest level of BMC/IMM

**408-900-000 MLNX:MLNX_DiagnosticTestEthernetPort Test Failed**

**Explanation:** Port Test Failed.

**Severity:** Error

**Serviceable:** Yes

**Recoverable:** No

**Automatically notify Support:** No

**User response:** Complete the following steps:

1. Make sure that the physical link of the port under test in the active state.
2. If these condition was met but the test keeps failing the port's adapter might be faulty.
3. Try replacing the adapter and repeating the test.

**Related Links:**

- IBM Support Website
- Latest level of DSA
- Latest level of BMC/IMM

**408-901-000 MLNX:MLNX_DiagnosticTestIBPort Test Failed**

**Explanation:** Port Test Failed.

**Severity:** Error

**Serviceable:** Yes

**Recoverable:** No

**Automatically notify Support:** No

**User response:** Complete the following steps:

1. Make sure that the physical link of the port under test in the active state and a subnet manager running on the fabric to which the port is attached.
2. If these condition was met but the test keeps failing the port's adapter might be faulty.
3. Try replacing the adapter and repeating the test.

**Related Links:**

- IBM Support Website
- Latest level of DSA
- Latest level of BMC/IMM

## DSA memory isolation test results

The following messages can result when you run the memory isolation test.

**201-000-000 Standalone Memory Test Passed**

**Explanation:** Quick/Full Memory Test All CPUs Passed.

**Severity:** Event

**Serviceable:** No

**Recoverable:** No

**Automatically notify Support:** No

**Related Links:**
- IBM Support Website
- Latest level of DSA
- Latest level of BMC/IMM

**201-000-001 Standalone Memory Test Passed**

**Explanation:** Quick/Full Memory Test CPU 1 Passed.

**Severity:** Event

**Serviceable:** No

**Recoverable:** No

**Automatically notify Support:** No

**Related Links:**
- IBM Support Website
- Latest level of DSA
- Latest level of BMC/IMM

**201-000-002 Standalone Memory Test Passed**

**Explanation:** Quick/Full Memory Test CPU 2 Passed.

**Severity:** Event

**Serviceable:** No

**Recoverable:** No

**Automatically notify Support:** No

**Related Links:**
- IBM Support Website
- Latest level of DSA
- Latest level of BMC/IMM

**201-000-003 Standalone Memory Test Passed**

**Explanation:** Quick/Full Memory Test CPU 3 Passed.

**Severity:** Event

**Serviceable:** No

**Recoverable:** No

**Automatically notify Support:** No

**Related Links:**
- IBM Support Website
- Latest level of DSA
- Latest level of BMC/IMM

**201-000-004 Standalone Memory Test Passed**

**Explanation:** Quick/Full Memory Test CPU 4 Passed.

**Severity:** Event

**Serviceable:** No

**Recoverable:** No

**Automatically notify Support:** No

**Related Links:**
- IBM Support Website
- Latest level of DSA
- Latest level of BMC/IMM

**201-811-000 Standalone Memory Test Aborted**

**Explanation:** Unable to Locate SMBIOS key "_SM_".

**Severity:** Warning

**Serviceable:** No

**Recoverable:** No

**Automatically notify Support:** No

**User response:** Complete the following steps:
1. Perform the actions mentioned one at a time and try the test after each action.
2. If the problem remains, contact your technical-service representative.
3. Turn off the system and disconnect it from power. Wait for 45 seconds. Reseat DIMM(s). Reconnect it to power.
4. Make sure that DSA and BIOS/uEFI are at the latest level.

**Related Links:**
- IBM Support Website
- Latest level of DSA
- Latest level of BMC/IMM

**201-811-001 Standalone Memory Test Aborted**

**Explanation:** Unable to Locate SMBIOS key "_SM_".

**Severity:** Warning

**Serviceable:** No

**Recoverable:** No

**Automatically notify Support:** No

**User response:** Complete the following steps:

1. Perform the actions mentioned one at a time and try the test after each action.
2. If the problem remains, contact your technical-service representative.
3. Turn off the system and disconnect it from power. Wait for 45 seconds. Reseat DIMM(s). Reconnect it to power.
4. Make sure that DSA and BIOS/uEFI are at the latest level.

**Related Links:**

- IBM Support Website
- Latest level of DSA
- Latest level of BMC/IMM

**201-811-002 Standalone Memory Test Aborted**

**Explanation:** Unable to Locate SMBIOS key "_SM_".

**Severity:** Warning

**Serviceable:** No

**Recoverable:** No

**Automatically notify Support:** No

**User response:** Complete the following steps:

1. Perform the actions mentioned one at a time and try the test after each action.
2. If the problem remains, contact your technical-service representative.
3. Turn off the system and disconnect it from power. Wait for 45 seconds. Reseat DIMM(s). Reconnect it to power.
4. Make sure that DSA and BIOS/uEFI are at the latest level.

**Related Links:**

- IBM Support Website
- Latest level of DSA
- Latest level of BMC/IMM

**201-811-003 Standalone Memory Test Aborted**

**Explanation:** Unable to Locate SMBIOS key "_SM_".

**Severity:** Warning

**Serviceable:** No

**Recoverable:** No

**Automatically notify Support:** No

**User response:** Complete the following steps:

1. Perform the actions mentioned one at a time and try the test after each action.
2. If the problem remains, contact your technical-service representative.
3. Turn off the system and disconnect it from power. Wait for 45 seconds. Reseat DIMM(s). Reconnect it to power.
4. Make sure that DSA and BIOS/uEFI are at the latest level.

**Related Links:**

- IBM Support Website
- Latest level of DSA
- Latest level of BMC/IMM

**201-812-000 Standalone Memory Test Aborted**

**Explanation:** Memory test is not supported for this system.

**Severity:** Warning

**Serviceable:** No

**Recoverable:** No

**Automatically notify Support:** No

**User response:** Complete the following steps:

1. Perform the actions mentioned one at a time and try the test after each action.
2. If the problem remains, contact your technical-service representative.
3. Turn off the system and disconnect it from power. Wait for 45 seconds. Reseat DIMM(s). Reconnect it to power.
4. Make sure that DSA and BIOS/uEFI are at the latest level.

**Related Links:**

- IBM Support Website
- Latest level of DSA
- Latest level of BMC/IMM

**201-812-001 Standalone Memory Test Aborted**

**Explanation:** Memory test is not supported for this system.

**Severity:** Warning

**Serviceable:** No

**Recoverable:** No

**Automatically notify Support:** No

**User response:** Complete the following steps:

1. Perform the actions mentioned one at a time and try the test after each action.
2. If the problem remains, contact your technical-service representative.
3. Turn off the system and disconnect it from power. Wait for 45 seconds. Reseat DIMM(s). Reconnect it to power.
4. Make sure that DSA and BIOS/uEFI are at the latest level.

**Related Links:**

- IBM Support Website
- Latest level of DSA
- Latest level of BMC/IMM

**201-812-002 Standalone Memory Test Aborted**

**Explanation:** Memory test is not supported for this system.

**Severity:** Warning

**Serviceable:** No

**Recoverable:** No

**Automatically notify Support:** No

**User response:** Complete the following steps:

1. Perform the actions mentioned one at a time and try the test after each action.
2. If the problem remains, contact your technical-service representative.
3. Turn off the system and disconnect it from power. Wait for 45 seconds. Reseat DIMM(s). Reconnect it to power.
4. Make sure that DSA and BIOS/uEFI are at the latest level.

**Related Links:**

- IBM Support Website
- Latest level of DSA
- Latest level of BMC/IMM

**201-812-003 Standalone Memory Test Aborted**

**Explanation:** Memory test is not supported for this system.

**Severity:** Warning

**Serviceable:** No

**Recoverable:** No

**Automatically notify Support:** No

**User response:** Complete the following steps:

1. Perform the actions mentioned one at a time and try the test after each action.
2. If the problem remains, contact your technical-service representative.
3. Turn off the system and disconnect it from power. Wait for 45 seconds. Reseat DIMM(s). Reconnect it to power.
4. Make sure that DSA and BIOS/uEFI are at the latest level.

**Related Links:**

- IBM Support Website
- Latest level of DSA
- Latest level of BMC/IMM

**201-813-000 Standalone Memory Test Aborted**

**Explanation:** Chipset Error: Can not turn OFF ECC error reporting in CPU.

**Severity:** Warning

**Serviceable:** No

**Recoverable:** No

**Automatically notify Support:** No

**User response:** Complete the following steps:

1. Perform the actions mentioned one at a time and try the test after each action.
2. If the problem remains, contact your technical-service representative.
3. Turn off the system and disconnect it from power. Wait for 45 seconds. Reseat DIMM(s). Reconnect it to power.
4. Make sure that DSA and BIOS/uEFI are at the latest level.

**Related Links:**

- IBM Support Website
- Latest level of DSA
- Latest level of BMC/IMM

**201-813-001 Standalone Memory Test Aborted**

**Explanation:** Chipset Error: Can not turn OFF ECC error reporting in CPU.

**Severity:** Warning

**Serviceable:** No

**Recoverable:** No

**Automatically notify Support:** No

**User response:** Complete the following steps:

1. Perform the actions mentioned one at a time and try the test after each action.
2. If the problem remains, contact your technical-service representative.
3. Turn off the system and disconnect it from power. Wait for 45 seconds. Reseat DIMM(s). Reconnect it to power.
4. Make sure that DSA and BIOS/uEFI are at the latest level.

**Related Links:**

- IBM Support Website
- Latest level of DSA
- Latest level of BMC/IMM

**201-813-002 Standalone Memory Test Aborted**

**Explanation:** Chipset Error: Can not turn OFF ECC error reporting in CPU.

**Severity:** Warning

**Serviceable:** No

**Recoverable:** No

**Automatically notify Support:** No

**User response:** Complete the following steps:

1. Perform the actions mentioned one at a time and try the test after each action.
2. If the problem remains, contact your technical-service representative.
3. Turn off the system and disconnect it from power. Wait for 45 seconds. Reseat DIMM(s). Reconnect it to power.
4. Make sure that DSA and BIOS/uEFI are at the latest level.

**Related Links:**

- IBM Support Website
- Latest level of DSA
- Latest level of BMC/IMM

**201-813-003 Standalone Memory Test Aborted**

**Explanation:** Chipset Error: Can not turn OFF ECC error reporting in CPU.

**Severity:** Warning

**Serviceable:** No

**Recoverable:** No

**Automatically notify Support:** No

**User response:** Complete the following steps:

1. Perform the actions mentioned one at a time and try the test after each action.
2. If the problem remains, contact your technical-service representative.
3. Turn off the system and disconnect it from power. Wait for 45 seconds. Reseat DIMM(s). Reconnect it to power.
4. Make sure that DSA and BIOS/uEFI are at the latest level.

**Related Links:**

- IBM Support Website
- Latest level of DSA
- Latest level of BMC/IMM

**201-814-000 Standalone Memory Test Aborted**

**Explanation:** Chipset Error: Can not disable Scubbing feature for CPU.

**Severity:** Warning

**Serviceable:** No

**Recoverable:** No

**Automatically notify Support:** No

**User response:** Complete the following steps:

1. Perform the actions mentioned one at a time and try the test after each action.
2. If the problem remains, contact your technical-service representative.
3. Turn off the system and disconnect it from power. Wait for 45 seconds. Reseat DIMM(s). Reconnect it to power.
4. Make sure that DSA and BIOS/uEFI are at the latest level.

**Related Links:**

- IBM Support Website
- Latest level of DSA
- Latest level of BMC/IMM

**201-814-001 Standalone Memory Test Aborted**

**Explanation:** Chipset Error: Can not disable Scubbing feature for CPU.

**Severity:** Warning

**Serviceable:** No

**Recoverable:** No

**Automatically notify Support:** No

**User response:** Complete the following steps:

1. Perform the actions mentioned one at a time and try the test after each action.
2. If the problem remains, contact your technical-service representative.
3. Turn off the system and disconnect it from power. Wait for 45 seconds. Reseat DIMM(s). Reconnect it to power.
4. Make sure that DSA and BIOS/uEFI are at the latest level.

**Related Links:**

- IBM Support Website
- Latest level of DSA
- Latest level of BMC/IMM

**201-814-002 Standalone Memory Test Aborted**

**Explanation:** Chipset Error: Can not disable Scubbing feature for CPU.

**Severity:** Warning

**Serviceable:** No

**Recoverable:** No

**Automatically notify Support:** No

**User response:** Complete the following steps:

1. Perform the actions mentioned one at a time and try the test after each action.
2. If the problem remains, contact your technical-service representative.
3. Turn off the system and disconnect it from power. Wait for 45 seconds. Reseat DIMM(s). Reconnect it to power.
4. Make sure that DSA and BIOS/uEFI are at the latest level.

**Related Links:**

- IBM Support Website
- Latest level of DSA
- Latest level of BMC/IMM

**201-814-003 Standalone Memory Test Aborted**

**Explanation:** Chipset Error: Can not disable Scubbing feature for CPU.

**Severity:** Warning

**Serviceable:** No

**Recoverable:** No

**Automatically notify Support:** No

**User response:** Complete the following steps:

1. Perform the actions mentioned one at a time and try the test after each action.
2. If the problem remains, contact your technical-service representative.
3. Turn off the system and disconnect it from power. Wait for 45 seconds. Reseat DIMM(s). Reconnect it to power.
4. Make sure that DSA and BIOS/uEFI are at the latest level.

**Related Links:**

- IBM Support Website
- Latest level of DSA
- Latest level of BMC/IMM

**201-815-000 Standalone Memory Test Aborted**

**Explanation:** Program Error with Quick Memory Menu Option Selection.

**Severity:** Warning

**Serviceable:** No

**Recoverable:** No

**Automatically notify Support:** No

**User response:** Complete the following steps:

1. Perform the actions mentioned one at a time and try the test after each action.
2. If the problem remains, contact your technical-service representative.
3. Turn off the system and disconnect it from power. Wait for 45 seconds. Reseat DIMM(s). Reconnect it to power.
4. Make sure that DSA and BIOS/uEFI are at the latest level.

**Related Links:**

- IBM Support Website
- Latest level of DSA
- Latest level of BMC/IMM

**201-815-001 Standalone Memory Test Aborted**

**Explanation:** Program Error with Quick Memory Menu Option Selection.

**Severity:** Warning

**Serviceable:** No

**Recoverable:** No

**Automatically notify Support:** No

**User response:** Complete the following steps:

1. Perform the actions mentioned one at a time and try the test after each action.
2. If the problem remains, contact your technical-service representative.
3. Turn off the system and disconnect it from power. Wait for 45 seconds. Reseat DIMM(s). Reconnect it to power.
4. Make sure that DSA and BIOS/uEFI are at the latest level.

**Related Links:**

- IBM Support Website
- Latest level of DSA
- Latest level of BMC/IMM

**201-815-002 Standalone Memory Test Aborted**

**Explanation:** Program Error with Quick Memory Menu Option Selection.

**Severity:** Warning

**Serviceable:** No

**Recoverable:** No

**Automatically notify Support:** No

**User response:** Complete the following steps:

1. Perform the actions mentioned one at a time and try the test after each action.
2. If the problem remains, contact your technical-service representative.
3. Turn off the system and disconnect it from power. Wait for 45 seconds. Reseat DIMM(s). Reconnect it to power.
4. Make sure that DSA and BIOS/uEFI are at the latest level.

**Related Links:**

- IBM Support Website
- Latest level of DSA
- Latest level of BMC/IMM

**201-815-003 Standalone Memory Test Aborted**

**Explanation:** Program Error with Quick Memory Menu Option Selection.

**Severity:** Warning

**Serviceable:** No

**Recoverable:** No

**Automatically notify Support:** No

**User response:** Complete the following steps:

1. Perform the actions mentioned one at a time and try the test after each action.
2. If the problem remains, contact your technical-service representative.
3. Turn off the system and disconnect it from power. Wait for 45 seconds. Reseat DIMM(s). Reconnect it to power.
4. Make sure that DSA and BIOS/uEFI are at the latest level.

**Related Links:**

- IBM Support Website
- Latest level of DSA
- Latest level of BMC/IMM

**201-816-000 Standalone Memory Test Aborted**

**Explanation:** Program Error with Full Memory Menu Option Selection.

**Severity:** Warning

**Serviceable:** No

**Recoverable:** No

**Automatically notify Support:** No

**User response:** Complete the following steps:

1. Perform the actions mentioned one at a time and try the test after each action.
2. If the problem remains, contact your technical-service representative.
3. Turn off the system and disconnect it from power. Wait for 45 seconds. Reseat DIMM(s). Reconnect it to power.
4. Make sure that DSA and BIOS/uEFI are at the latest level.

**Related Links:**

- IBM Support Website
- Latest level of DSA
- Latest level of BMC/IMM

**201-816-001 Standalone Memory Test Aborted**

**Explanation:** Program Error with Full Memory Menu Option Selection.

**Severity:** Warning

**Serviceable:** No

**Recoverable:** No

**Automatically notify Support:** No

**User response:** Complete the following steps:

1. Perform the actions mentioned one at a time and try the test after each action.
2. If the problem remains, contact your technical-service representative.
3. Turn off the system and disconnect it from power. Wait for 45 seconds. Reseat DIMM(s). Reconnect it to power.
4. Make sure that DSA and BIOS/uEFI are at the latest level.

**Related Links:**

- IBM Support Website
- Latest level of DSA
- Latest level of BMC/IMM

**201-816-002 Standalone Memory Test Aborted**

**Explanation:** Program Error with Full Memory Menu Option Selection.

**Severity:** Warning

**Serviceable:** No

**Recoverable:** No

**Automatically notify Support:** No

**User response:** Complete the following steps:

1. Perform the actions mentioned one at a time and try the test after each action.
2. If the problem remains, contact your technical-service representative.
3. Turn off the system and disconnect it from power. Wait for 45 seconds. Reseat DIMM(s). Reconnect it to power.
4. Make sure that DSA and BIOS/uEFI are at the latest level.

**Related Links:**

- IBM Support Website
- Latest level of DSA
- Latest level of BMC/IMM

**201-816-003 Standalone Memory Test Aborted**

**Explanation:** Program Error with Full Memory Menu Option Selection.

**Severity:** Warning

**Serviceable:** No

**Recoverable:** No

**Automatically notify Support:** No

**User response:** Complete the following steps:

1. Perform the actions mentioned one at a time and try the test after each action.
2. If the problem remains, contact your technical-service representative.
3. Turn off the system and disconnect it from power. Wait for 45 seconds. Reseat DIMM(s). Reconnect it to power.
4. Make sure that DSA and BIOS/uEFI are at the latest level.

**Related Links:**

- IBM Support Website
- Latest level of DSA
- Latest level of BMC/IMM

**201-818-000 Standalone Memory Test Aborted**

**Explanation:** Unable to Locate SMBIOS key "_SM_".

**Severity:** Warning

**Serviceable:** No

**Recoverable:** No

**Automatically notify Support:** No

**User response:** Complete the following steps:

1. Perform the actions mentioned one at a time and try the test after each action.
2. If the problem remains, contact your technical-service representative.
3. Turn off the system and disconnect it from power. Wait for 45 seconds. Reseat DIMM(s). Reconnect it to power.
4. Make sure that DSA and BIOS/uEFI are at the latest level.

**Related Links:**

- IBM Support Website
- Latest level of DSA
- Latest level of BMC/IMM

**201-818-001 Standalone Memory Test Aborted**

**Explanation:** Unable to Locate SMBIOS key "_SM_".

**Severity:** Warning

**Serviceable:** No

**Recoverable:** No

**Automatically notify Support:** No

**User response:** Complete the following steps:

1. Perform the actions mentioned one at a time and try the test after each action.
2. If the problem remains, contact your technical-service representative.
3. Turn off the system and disconnect it from power. Wait for 45 seconds. Reseat DIMM(s). Reconnect it to power.
4. Make sure that DSA and BIOS/uEFI are at the latest level.

**Related Links:**

- IBM Support Website
- Latest level of DSA
- Latest level of BMC/IMM

**201-818-002 Standalone Memory Test Aborted**

**Explanation:** Unable to Locate SMBIOS key "_SM_".

**Severity:** Warning

**Serviceable:** No

**Recoverable:** No

**Automatically notify Support:** No

**User response:** Complete the following steps:

1. Perform the actions mentioned one at a time and try the test after each action.
2. If the problem remains, contact your technical-service representative.
3. Turn off the system and disconnect it from power. Wait for 45 seconds. Reseat DIMM(s). Reconnect it to power.
4. Make sure that DSA and BIOS/uEFI are at the latest level.

**Related Links:**

- IBM Support Website
- Latest level of DSA
- Latest level of BMC/IMM

**201-818-003 Standalone Memory Test Aborted**

**Explanation:** Unable to Locate SMBIOS key "_SM_".

**Severity:** Warning

**Serviceable:** No

**Recoverable:** No

**Automatically notify Support:** No

**User response:** Complete the following steps:

1. Perform the actions mentioned one at a time and try the test after each action.
2. If the problem remains, contact your technical-service representative.
3. Turn off the system and disconnect it from power. Wait for 45 seconds. Reseat DIMM(s). Reconnect it to power.
4. Make sure that DSA and BIOS/uEFI are at the latest level.

**Related Links:**

- IBM Support Website
- Latest level of DSA
- Latest level of BMC/IMM

**201-819-000 Standalone Memory Test Aborted**

**Explanation:** The start-end address ranges in the restricted area of the memory.

**Severity:** Warning

**Serviceable:** No

**Recoverable:** No

**Automatically notify Support:** No

**User response:** Complete the following steps:

1. Perform the actions mentioned one at a time and try the test after each action.
2. If the problem remains, contact your technical-service representative.
3. Turn off the system and disconnect it from power. Wait for 45 seconds. Reseat DIMM(s). Reconnect it to power.
4. Make sure that DSA and BIOS/uEFI are at the latest level.

**Related Links:**

- IBM Support Website
- Latest level of DSA
- Latest level of BMC/IMM

**201-819-001 Standalone Memory Test Aborted**

**Explanation:** The start-end address ranges in the restricted area of the memory.

**Severity:** Warning

**Serviceable:** No

**Recoverable:** No

**Automatically notify Support:** No

**User response:** Complete the following steps:

1. Perform the actions mentioned one at a time and try the test after each action.
2. If the problem remains, contact your technical-service representative.
3. Turn off the system and disconnect it from power. Wait for 45 seconds. Reseat DIMM(s). Reconnect it to power.
4. Make sure that DSA and BIOS/uEFI are at the latest level.

**Related Links:**

- IBM Support Website
- Latest level of DSA
- Latest level of BMC/IMM

**201-819-002 Standalone Memory Test Aborted**

**Explanation:** The start-end address ranges in the restricted area of the memory.

**Severity:** Warning

**Serviceable:** No

**Recoverable:** No

**Automatically notify Support:** No

**User response:** Complete the following steps:

1. Perform the actions mentioned one at a time and try the test after each action.
2. If the problem remains, contact your technical-service representative.
3. Turn off the system and disconnect it from power. Wait for 45 seconds. Reseat DIMM(s). Reconnect it to power.
4. Make sure that DSA and BIOS/uEFI are at the latest level.

**Related Links:**

- IBM Support Website
- Latest level of DSA
- Latest level of BMC/IMM

**201-819-003 Standalone Memory Test Aborted**

**Explanation:** The start-end address ranges in the restricted area of the memory.

**Severity:** Warning

**Serviceable:** No

**Recoverable:** No

**Automatically notify Support:** No

**User response:** Complete the following steps:

1. Perform the actions mentioned one at a time and try the test after each action.
2. If the problem remains, contact your technical-service representative.
3. Turn off the system and disconnect it from power. Wait for 45 seconds. Reseat DIMM(s). Reconnect it to power.
4. Make sure that DSA and BIOS/uEFI are at the latest level.

**Related Links:**

- IBM Support Website
- Latest level of DSA
- Latest level of BMC/IMM

**201-820-000 Standalone Memory Test Aborted**

**Explanation:** Memory Upper limit is less than 16 Mbytes.

**Severity:** Warning

**Serviceable:** No

**Recoverable:** No

**Automatically notify Support:** No

**User response:** Complete the following steps:

1. Perform the actions mentioned one at a time and try the test after each action.
2. If the problem remains, contact your technical-service representative.
3. Turn off the system and disconnect it from power. Wait for 45 seconds. Reseat DIMM(s). Reconnect it to power.
4. Make sure that DSA and BIOS/uEFI are at the latest level.

**Related Links:**

- IBM Support Website
- Latest level of DSA
- Latest level of BMC/IMM

**201-820-001 Standalone Memory Test Aborted**

**Explanation:** Memory Upper limit is less than 16 Mbytes.

**Severity:** Warning

**Serviceable:** No

**Recoverable:** No

**Automatically notify Support:** No

**User response:** Complete the following steps:

1. Perform the actions mentioned one at a time and try the test after each action.
2. If the problem remains, contact your technical-service representative.
3. Turn off the system and disconnect it from power. Wait for 45 seconds. Reseat DIMM(s). Reconnect it to power.
4. Make sure that DSA and BIOS/uEFI are at the latest level.

**Related Links:**

- IBM Support Website
- Latest level of DSA
- Latest level of BMC/IMM

**201-820-002 Standalone Memory Test Aborted**

**Explanation:** Memory Upper limit is less than 16 Mbytes.

**Severity:** Warning

**Serviceable:** No

**Recoverable:** No

**Automatically notify Support:** No

**User response:** Complete the following steps:

1. Perform the actions mentioned one at a time and try the test after each action.
2. If the problem remains, contact your technical-service representative.
3. Turn off the system and disconnect it from power. Wait for 45 seconds. Reseat DIMM(s). Reconnect it to power.
4. Make sure that DSA and BIOS/uEFI are at the latest level.

**Related Links:**

- IBM Support Website
- Latest level of DSA
- Latest level of BMC/IMM

**201-820-003 Standalone Memory Test Aborted**

**Explanation:** Memory Upper limit is less than 16 Mbytes.

**Severity:** Warning

**Serviceable:** No

**Recoverable:** No

**Automatically notify Support:** No

**User response:** Complete the following steps:

1. Perform the actions mentioned one at a time and try the test after each action.
2. If the problem remains, contact your technical-service representative.
3. Turn off the system and disconnect it from power. Wait for 45 seconds. Reseat DIMM(s). Reconnect it to power.
4. Make sure that DSA and BIOS/uEFI are at the latest level.

**Related Links:**

- IBM Support Website
- Latest level of DSA
- Latest level of BMC/IMM

**201-821-000 Standalone Memory Test Aborted**

**Explanation:** Variable range MTRR registers are larger than fixed range MTRR registers.

**Severity:** Warning

**Serviceable:** No

**Recoverable:** No

**Automatically notify Support:** No

**User response:** Complete the following steps:

1. Perform the actions mentioned one at a time and try the test after each action.
2. If the problem remains, contact your technical-service representative.
3. Turn off the system and disconnect it from power. Wait for 45 seconds. Reseat DIMM(s). Reconnect it to power.
4. Make sure that DSA and BIOS/uEFI are at the latest level.

**Related Links:**

- IBM Support Website
- Latest level of DSA
- Latest level of BMC/IMM

**201-821-001 Standalone Memory Test Aborted**

**Explanation:** Variable range MTRR registers are larger than fixed range MTRR registers.

**Severity:** Warning

**Serviceable:** No

**Recoverable:** No

**Automatically notify Support:** No

**User response:** Complete the following steps:

1. Perform the actions mentioned one at a time and try the test after each action.
2. If the problem remains, contact your technical-service representative.
3. Turn off the system and disconnect it from power. Wait for 45 seconds. Reseat DIMM(s). Reconnect it to power.
4. Make sure that DSA and BIOS/uEFI are at the latest level.

**Related Links:**

- IBM Support Website
- Latest level of DSA
- Latest level of BMC/IMM

**201-821-002 Standalone Memory Test Aborted**

**Explanation:** Variable range MTRR registers are larger than fixed range MTRR registers.

**Severity:** Warning

**Serviceable:** No

**Recoverable:** No

**Automatically notify Support:** No

**User response:** Complete the following steps:

1. Perform the actions mentioned one at a time and try the test after each action.
2. If the problem remains, contact your technical-service representative.
3. Turn off the system and disconnect it from power. Wait for 45 seconds. Reseat DIMM(s). Reconnect it to power.
4. Make sure that DSA and BIOS/uEFI are at the latest level.

**Related Links:**

- IBM Support Website
- Latest level of DSA
- Latest level of BMC/IMM

**201-821-003 Standalone Memory Test Aborted**

**Explanation:** Variable range MTRR registers are larger than fixed range MTRR registers.

**Severity:** Warning

**Serviceable:** No

**Recoverable:** No

**Automatically notify Support:** No

**User response:** Complete the following steps:

1. Perform the actions mentioned one at a time and try the test after each action.
2. If the problem remains, contact your technical-service representative.
3. Turn off the system and disconnect it from power. Wait for 45 seconds. Reseat DIMM(s). Reconnect it to power.
4. Make sure that DSA and BIOS/uEFI are at the latest level.

**Related Links:**

- IBM Support Website
- Latest level of DSA
- Latest level of BMC/IMM

**201-822-000 Standalone Memory Test Aborted**

**Explanation:** Invalid MTRR service request.

**Severity:** Warning

**Serviceable:** No

**Recoverable:** No

**Automatically notify Support:** No

**User response:** Complete the following steps:

1. Perform the actions mentioned one at a time and try the test after each action.
2. If the problem remains, contact your technical-service representative.
3. Turn off the system and disconnect it from power. Wait for 45 seconds. Reseat DIMM(s). Reconnect it to power.
4. Make sure that DSA and BIOS/uEFI are at the latest level.

**Related Links:**

- IBM Support Website
- Latest level of DSA
- Latest level of BMC/IMM

**201-822-001 Standalone Memory Test Aborted**

**Explanation:** Invalid MTRR service request.

**Severity:** Warning

**Serviceable:** No

**Recoverable:** No

**Automatically notify Support:** No

**User response:** Complete the following steps:

1. Perform the actions mentioned one at a time and try the test after each action.
2. If the problem remains, contact your technical-service representative.
3. Turn off the system and disconnect it from power. Wait for 45 seconds. Reseat DIMM(s). Reconnect it to power.
4. Make sure that DSA and BIOS/uEFI are at the latest level.

**Related Links:**

- IBM Support Website
- Latest level of DSA
- Latest level of BMC/IMM

**201-822-002 Standalone Memory Test Aborted**

**Explanation:** Invalid MTRR service request.

**Severity:** Warning

**Serviceable:** No

**Recoverable:** No

**Automatically notify Support:** No

**User response:** Complete the following steps:

1. Perform the actions mentioned one at a time and try the test after each action.
2. If the problem remains, contact your technical-service representative.
3. Turn off the system and disconnect it from power. Wait for 45 seconds. Reseat DIMM(s). Reconnect it to power.
4. Make sure that DSA and BIOS/uEFI are at the latest level.

**Related Links:**

- IBM Support Website
- Latest level of DSA
- Latest level of BMC/IMM

**201-822-003 Standalone Memory Test Aborted**

**Explanation:** Invalid MTRR service request.

**Severity:** Warning

**Serviceable:** No

**Recoverable:** No

**Automatically notify Support:** No

**User response:** Complete the following steps:

1. Perform the actions mentioned one at a time and try the test after each action.
2. If the problem remains, contact your technical-service representative.
3. Turn off the system and disconnect it from power. Wait for 45 seconds. Reseat DIMM(s). Reconnect it to power.
4. Make sure that DSA and BIOS/uEFI are at the latest level.

**Related Links:**

- IBM Support Website
- Latest level of DSA
- Latest level of BMC/IMM

**201-824-000 Standalone Memory Test Aborted**

**Explanation:** Node Interleave feature must be OFF. Go to Setup and disable Node Interleave option and then re-run the test.

**Severity:** Warning

**Serviceable:** No

**Recoverable:** No

**Automatically notify Support:** No

**User response:** Complete the following steps:

1. Perform the actions mentioned one at a time and try the test after each action.
2. If the problem remains, contact your technical-service representative.
3. Turn off the system and disconnect it from power. Wait for 45 seconds. Reseat DIMM(s). Reconnect it to power.
4. Make sure that DSA and BIOS/uEFI are at the latest level.

**Related Links:**

- IBM Support Website
- Latest level of DSA
- Latest level of BMC/IMM

**201-824-001 Standalone Memory Test Aborted**

**Explanation:** Node Interleave feature must be OFF. Go to Setup and disable Node Interleave option and then re-run the test.

**Severity:** Warning

**Serviceable:** No

**Recoverable:** No

**Automatically notify Support:** No

**User response:** Complete the following steps:

1. Perform the actions mentioned one at a time and try the test after each action.
2. If the problem remains, contact your technical-service representative.
3. Turn off the system and disconnect it from power. Wait for 45 seconds. Reseat DIMM(s). Reconnect it to power.
4. Make sure that DSA and BIOS/uEFI are at the latest level.

**Related Links:**

- IBM Support Website
- Latest level of DSA
- Latest level of BMC/IMM

**201-824-002 Standalone Memory Test Aborted**

**Explanation:** Node Interleave feature must be OFF. Go to Setup and disable Node Interleave option and then re-run the test.

**Severity:** Warning

**Serviceable:** No

**Recoverable:** No

**Automatically notify Support:** No

**User response:** Complete the following steps:

1. Perform the actions mentioned one at a time and try the test after each action.
2. If the problem remains, contact your technical-service representative.
3. Turn off the system and disconnect it from power. Wait for 45 seconds. Reseat DIMM(s). Reconnect it to power.
4. Make sure that DSA and BIOS/uEFI are at the latest level.

**Related Links:**

- IBM Support Website
- Latest level of DSA
- Latest level of BMC/IMM

**201-824-003 Standalone Memory Test Aborted**

**Explanation:** Node Interleave feature must be OFF. Go to Setup and disable Node Interleave option and then re-run the test.

**Severity:** Warning

**Serviceable:** No

**Recoverable:** No

**Automatically notify Support:** No

**User response:** Complete the following steps:

1. Perform the actions mentioned one at a time and try the test after each action.
2. If the problem remains, contact your technical-service representative.
3. Turn off the system and disconnect it from power. Wait for 45 seconds. Reseat DIMM(s). Reconnect it to power.
4. Make sure that DSA and BIOS/uEFI are at the latest level.

**Related Links:**

- IBM Support Website
- Latest level of DSA
- Latest level of BMC/IMM

**201-826-000 Standalone Memory Test Aborted**

**Explanation:** BIOS: Memory Controller has been disabled. Go to Setup and Enable Memory Controller.

**Severity:** Warning

**Serviceable:** No

**Recoverable:** No

**Automatically notify Support:** No

**User response:** Complete the following steps:

1. Perform the actions mentioned one at a time and try the test after each action.
2. If the problem remains, contact your technical-service representative.
3. Turn off the system and disconnect it from power. Wait for 45 seconds. Reseat DIMM(s). Reconnect it to power.
4. Make sure that DSA and BIOS/uEFI are at the latest level.

**Related Links:**

- IBM Support Website
- Latest level of DSA
- Latest level of BMC/IMM

**201-826-001 Standalone Memory Test Aborted**

**Explanation:** BIOS: Memory Controller has been disabled. Go to Setup and Enable Memory Controller.

**Severity:** Warning

**Serviceable:** No

**Recoverable:** No

**Automatically notify Support:** No

**User response:** Complete the following steps:

1. Perform the actions mentioned one at a time and try the test after each action.
2. If the problem remains, contact your technical-service representative.
3. Turn off the system and disconnect it from power. Wait for 45 seconds. Reseat DIMM(s). Reconnect it to power.
4. Make sure that DSA and BIOS/uEFI are at the latest level.

**Related Links:**

- IBM Support Website
- Latest level of DSA
- Latest level of BMC/IMM

**201-826-002 Standalone Memory Test Aborted**

**Explanation:** BIOS: Memory Controller has been disabled. Go to Setup and Enable Memory Controller.

**Severity:** Warning

**Serviceable:** No

**Recoverable:** No

**Automatically notify Support:** No

**User response:** Complete the following steps:

1. Perform the actions mentioned one at a time and try the test after each action.
2. If the problem remains, contact your technical-service representative.
3. Turn off the system and disconnect it from power. Wait for 45 seconds. Reseat DIMM(s). Reconnect it to power.
4. Make sure that DSA and BIOS/uEFI are at the latest level.

**Related Links:**

- IBM Support Website
- Latest level of DSA
- Latest level of BMC/IMM

**201-826-003 Standalone Memory Test Aborted**

**Explanation:** BIOS: Memory Controller has been disabled. Go to Setup and Enable Memory Controller.

**Severity:** Warning

**Serviceable:** No

**Recoverable:** No

**Automatically notify Support:** No

**User response:** Complete the following steps:

1. Perform the actions mentioned one at a time and try the test after each action.
2. If the problem remains, contact your technical-service representative.
3. Turn off the system and disconnect it from power. Wait for 45 seconds. Reseat DIMM(s). Reconnect it to power.
4. Make sure that DSA and BIOS/uEFI are at the latest level.

**Related Links:**

- IBM Support Website
- Latest level of DSA
- Latest level of BMC/IMM

**201-827-000 Standalone Memory Test Aborted**

**Explanation:** BIOS: ECC function has been disabled by BIOS. Go to Setup and enable ECC generation.

**Severity:** Warning

**Serviceable:** No

**Recoverable:** No

**Automatically notify Support:** No

**User response:** Complete the following steps:

1. Perform the actions mentioned one at a time and try the test after each action.
2. If the problem remains, contact your technical-service representative.
3. Turn off the system and disconnect it from power. Wait for 45 seconds. Reseat DIMM(s). Reconnect it to power.
4. Make sure that DSA and BIOS/uEFI are at the latest level.

**Related Links:**

- IBM Support Website
- Latest level of DSA
- Latest level of BMC/IMM

**201-827-001 Standalone Memory Test Aborted**

**Explanation:** BIOS: ECC function has been disabled by BIOS. Go to Setup and enable ECC generation.

**Severity:** Warning

**Serviceable:** No

**Recoverable:** No

**Automatically notify Support:** No

**User response:** Complete the following steps:

1. Perform the actions mentioned one at a time and try the test after each action.
2. If the problem remains, contact your technical-service representative.
3. Turn off the system and disconnect it from power. Wait for 45 seconds. Reseat DIMM(s). Reconnect it to power.
4. Make sure that DSA and BIOS/uEFI are at the latest level.

**Related Links:**

- IBM Support Website
- Latest level of DSA
- Latest level of BMC/IMM

**201-827-002 Standalone Memory Test Aborted**

**Explanation:** BIOS: ECC function has been disabled by BIOS. Go to Setup and enable ECC generation.

**Severity:** Warning

**Serviceable:** No

**Recoverable:** No

**Automatically notify Support:** No

**User response:** Complete the following steps:

1. Perform the actions mentioned one at a time and try the test after each action.
2. If the problem remains, contact your technical-service representative.
3. Turn off the system and disconnect it from power. Wait for 45 seconds. Reseat DIMM(s). Reconnect it to power.
4. Make sure that DSA and BIOS/uEFI are at the latest level.

**Related Links:**

- IBM Support Website
- Latest level of DSA
- Latest level of BMC/IMM

**201-827-003 Standalone Memory Test Aborted**

**Explanation:** BIOS: ECC function has been disabled by BIOS. Go to Setup and enable ECC generation.

**Severity:** Warning

**Serviceable:** No

**Recoverable:** No

**Automatically notify Support:** No

**User response:** Complete the following steps:

1. Perform the actions mentioned one at a time and try the test after each action.
2. If the problem remains, contact your technical-service representative.
3. Turn off the system and disconnect it from power. Wait for 45 seconds. Reseat DIMM(s). Reconnect it to power.
4. Make sure that DSA and BIOS/uEFI are at the latest level.

**Related Links:**

- IBM Support Website
- Latest level of DSA
- Latest level of BMC/IMM

**201-844-000 Standalone Memory Test Aborted**

**Explanation:** Chipset Error: Problem in masking MSR machine check control MASK registers.

**Severity:** Warning

**Serviceable:** No

**Recoverable:** No

**Automatically notify Support:** No

**User response:** Complete the following steps:

1. Perform the actions mentioned one at a time and try the test after each action.
2. If the problem remains, contact your technical-service representative.
3. Turn off the system and disconnect it from power. Wait for 45 seconds. Reseat DIMM(s). Reconnect it to power.
4. Make sure that DSA and BIOS/uEFI are at the latest level.

**Related Links:**

- IBM Support Website
- Latest level of DSA
- Latest level of BMC/IMM

**201-844-001 Standalone Memory Test Aborted**

**Explanation:** Chipset Error: Problem in masking MSR machine check control MASK registers.

**Severity:** Warning

**Serviceable:** No

**Recoverable:** No

**Automatically notify Support:** No

**User response:** Complete the following steps:

1. Perform the actions mentioned one at a time and try the test after each action.
2. If the problem remains, contact your technical-service representative.
3. Turn off the system and disconnect it from power. Wait for 45 seconds. Reseat DIMM(s). Reconnect it to power.
4. Make sure that DSA and BIOS/uEFI are at the latest level.

**Related Links:**

- IBM Support Website
- Latest level of DSA
- Latest level of BMC/IMM

**201-844-002 Standalone Memory Test Aborted**

**Explanation:** Chipset Error: Problem in masking MSR machine check control MASK registers.

**Severity:** Warning

**Serviceable:** No

**Recoverable:** No

**Automatically notify Support:** No

**User response:** Complete the following steps:

1. Perform the actions mentioned one at a time and try the test after each action.
2. If the problem remains, contact your technical-service representative.
3. Turn off the system and disconnect it from power. Wait for 45 seconds. Reseat DIMM(s). Reconnect it to power.
4. Make sure that DSA and BIOS/uEFI are at the latest level.

**Related Links:**

- IBM Support Website
- Latest level of DSA
- Latest level of BMC/IMM

**201-844-003 Standalone Memory Test Aborted**

**Explanation:** Chipset Error: Problem in masking MSR machine check control MASK registers.

**Severity:** Warning

**Serviceable:** No

**Recoverable:** No

**Automatically notify Support:** No

**User response:** Complete the following steps:

1. Perform the actions mentioned one at a time and try the test after each action.
2. If the problem remains, contact your technical-service representative.
3. Turn off the system and disconnect it from power. Wait for 45 seconds. Reseat DIMM(s). Reconnect it to power.
4. Make sure that DSA and BIOS/uEFI are at the latest level.

**Related Links:**

- IBM Support Website
- Latest level of DSA
- Latest level of BMC/IMM

**201-845-000 Standalone Memory Test Aborted**

**Explanation:** Chipset Error: Problem clearing MSR machine check control registers.

**Severity:** Warning

**Serviceable:** No

**Recoverable:** No

**Automatically notify Support:** No

**User response:** Complete the following steps:

1. Perform the actions mentioned one at a time and try the test after each action.
2. If the problem remains, contact your technical-service representative.
3. Turn off the system and disconnect it from power. Wait for 45 seconds. Reseat DIMM(s). Reconnect it to power.
4. Make sure that DSA and BIOS/uEFI are at the latest level.

**Related Links:**

- IBM Support Website
- Latest level of DSA
- Latest level of BMC/IMM

**201-845-001 Standalone Memory Test Aborted**

**Explanation:** Chipset Error: Problem clearing MSR machine check control registers.

**Severity:** Warning

**Serviceable:** No

**Recoverable:** No

**Automatically notify Support:** No

**User response:** Complete the following steps:

1. Perform the actions mentioned one at a time and try the test after each action.
2. If the problem remains, contact your technical-service representative.
3. Turn off the system and disconnect it from power. Wait for 45 seconds. Reseat DIMM(s). Reconnect it to power.
4. Make sure that DSA and BIOS/uEFI are at the latest level.

**Related Links:**

- IBM Support Website
- Latest level of DSA
- Latest level of BMC/IMM

**201-845-002 Standalone Memory Test Aborted**

**Explanation:** Chipset Error: Problem clearing MSR machine check control registers.

**Severity:** Warning

**Serviceable:** No

**Recoverable:** No

**Automatically notify Support:** No

**User response:** Complete the following steps:

1. Perform the actions mentioned one at a time and try the test after each action.
2. If the problem remains, contact your technical-service representative.
3. Turn off the system and disconnect it from power. Wait for 45 seconds. Reseat DIMM(s). Reconnect it to power.
4. Make sure that DSA and BIOS/uEFI are at the latest level.

**Related Links:**

- IBM Support Website
- Latest level of DSA
- Latest level of BMC/IMM

**201-845-003 Standalone Memory Test Aborted**

**Explanation:** Chipset Error: Problem clearing MSR machine check control registers.

**Severity:** Warning

**Serviceable:** No

**Recoverable:** No

**Automatically notify Support:** No

**User response:** Complete the following steps:

1. Perform the actions mentioned one at a time and try the test after each action.
2. If the problem remains, contact your technical-service representative.
3. Turn off the system and disconnect it from power. Wait for 45 seconds. Reseat DIMM(s). Reconnect it to power.
4. Make sure that DSA and BIOS/uEFI are at the latest level.

**Related Links:**

- IBM Support Website
- Latest level of DSA
- Latest level of BMC/IMM

**201-859-000 Standalone Memory Test Aborted**

**Explanation:** INVALID XSECSRAT type.

**Severity:** Warning

**Serviceable:** No

**Recoverable:** No

**Automatically notify Support:** No

**User response:** Complete the following steps:

1. Perform the actions mentioned one at a time and try the test after each action.
2. If the problem remains, contact your technical-service representative.
3. Turn off the system and disconnect it from power. Wait for 45 seconds. Reseat DIMM(s). Reconnect it to power.
4. Make sure that DSA and BIOS/uEFI are at the latest level.

**Related Links:**

- IBM Support Website
- Latest level of DSA
- Latest level of BMC/IMM

**201-859-001 Standalone Memory Test Aborted**

**Explanation:** INVALID XSECSRAT type.

**Severity:** Warning

**Serviceable:** No

**Recoverable:** No

**Automatically notify Support:** No

**User response:** Complete the following steps:

1. Perform the actions mentioned one at a time and try the test after each action.
2. If the problem remains, contact your technical-service representative.
3. Turn off the system and disconnect it from power. Wait for 45 seconds. Reseat DIMM(s). Reconnect it to power.
4. Make sure that DSA and BIOS/uEFI are at the latest level.

**Related Links:**

- IBM Support Website
- Latest level of DSA
- Latest level of BMC/IMM

**201-859-002 Standalone Memory Test Aborted**

**Explanation:** INVALID XSECSRAT type.

**Severity:** Warning

**Serviceable:** No

**Recoverable:** No

**Automatically notify Support:** No

**User response:** Complete the following steps:

1. Perform the actions mentioned one at a time and try the test after each action.
2. If the problem remains, contact your technical-service representative.
3. Turn off the system and disconnect it from power. Wait for 45 seconds. Reseat DIMM(s). Reconnect it to power.
4. Make sure that DSA and BIOS/uEFI are at the latest level.

**Related Links:**

- IBM Support Website
- Latest level of DSA
- Latest level of BMC/IMM

**201-859-003 Standalone Memory Test Aborted**

**Explanation:** INVALID XSECSRAT type.

**Severity:** Warning

**Serviceable:** No

**Recoverable:** No

**Automatically notify Support:** No

**User response:** Complete the following steps:

1. Perform the actions mentioned one at a time and try the test after each action.
2. If the problem remains, contact your technical-service representative.
3. Turn off the system and disconnect it from power. Wait for 45 seconds. Reseat DIMM(s). Reconnect it to power.
4. Make sure that DSA and BIOS/uEFI are at the latest level.

**Related Links:**

- IBM Support Website
- Latest level of DSA
- Latest level of BMC/IMM

**201-860-000 Standalone Memory Test Aborted**

**Explanation:** No OEM0 type 1 found.

**Severity:** Warning

**Serviceable:** No

**Recoverable:** No

**Automatically notify Support:** No

**User response:** Complete the following steps:

1. Perform the actions mentioned one at a time and try the test after each action.
2. If the problem remains, contact your technical-service representative.
3. Turn off the system and disconnect it from power. Wait for 45 seconds. Reseat DIMM(s). Reconnect it to power.
4. Make sure that DSA and BIOS/uEFI are at the latest level.

**Related Links:**

- IBM Support Website
- Latest level of DSA
- Latest level of BMC/IMM

**201-860-001 Standalone Memory Test Aborted**

**Explanation:** No OEM0 type 1 found.

**Severity:** Warning

**Serviceable:** No

**Recoverable:** No

**Automatically notify Support:** No

**User response:** Complete the following steps:

1. Perform the actions mentioned one at a time and try the test after each action.
2. If the problem remains, contact your technical-service representative.
3. Turn off the system and disconnect it from power. Wait for 45 seconds. Reseat DIMM(s). Reconnect it to power.
4. Make sure that DSA and BIOS/uEFI are at the latest level.

**Related Links:**

- IBM Support Website
- Latest level of DSA
- Latest level of BMC/IMM

**201-860-002 Standalone Memory Test Aborted**

**Explanation:** No OEM0 type 1 found.

**Severity:** Warning

**Serviceable:** No

**Recoverable:** No

**Automatically notify Support:** No

**User response:** Complete the following steps:

1. Perform the actions mentioned one at a time and try the test after each action.
2. If the problem remains, contact your technical-service representative.
3. Turn off the system and disconnect it from power. Wait for 45 seconds. Reseat DIMM(s). Reconnect it to power.
4. Make sure that DSA and BIOS/uEFI are at the latest level.

**Related Links:**

- IBM Support Website
- Latest level of DSA
- Latest level of BMC/IMM

**201-860-003 Standalone Memory Test Aborted**

**Explanation:** No OEM0 type 1 found.

**Severity:** Warning

**Serviceable:** No

**Recoverable:** No

**Automatically notify Support:** No

**User response:** Complete the following steps:

1. Perform the actions mentioned one at a time and try the test after each action.
2. If the problem remains, contact your technical-service representative.
3. Turn off the system and disconnect it from power. Wait for 45 seconds. Reseat DIMM(s). Reconnect it to power.
4. Make sure that DSA and BIOS/uEFI are at the latest level.

**Related Links:**

- IBM Support Website
- Latest level of DSA
- Latest level of BMC/IMM

**201-861-000 Standalone Memory Test Aborted**

**Explanation:** No SRAT type 1 found.

**Severity:** Warning

**Serviceable:** No

**Recoverable:** No

**Automatically notify Support:** No

**User response:** Complete the following steps:

1. Perform the actions mentioned one at a time and try the test after each action.
2. If the problem remains, contact your technical-service representative.
3. Turn off the system and disconnect it from power. Wait for 45 seconds. Reseat DIMM(s). Reconnect it to power.
4. Make sure that DSA and BIOS/uEFI are at the latest level.

**Related Links:**

- IBM Support Website
- Latest level of DSA
- Latest level of BMC/IMM

**201-861-001 Standalone Memory Test Aborted**

**Explanation:** No SRAT type 1 found.

**Severity:** Warning

**Serviceable:** No

**Recoverable:** No

**Automatically notify Support:** No

**User response:** Complete the following steps:

1. Perform the actions mentioned one at a time and try the test after each action.
2. If the problem remains, contact your technical-service representative.
3. Turn off the system and disconnect it from power. Wait for 45 seconds. Reseat DIMM(s). Reconnect it to power.
4. Make sure that DSA and BIOS/uEFI are at the latest level.

**Related Links:**

- IBM Support Website
- Latest level of DSA
- Latest level of BMC/IMM

**201-861-002 Standalone Memory Test Aborted**

**Explanation:** No SRAT type 1 found.

**Severity:** Warning

**Serviceable:** No

**Recoverable:** No

**Automatically notify Support:** No

**User response:** Complete the following steps:

1. Perform the actions mentioned one at a time and try the test after each action.
2. If the problem remains, contact your technical-service representative.
3. Turn off the system and disconnect it from power. Wait for 45 seconds. Reseat DIMM(s). Reconnect it to power.
4. Make sure that DSA and BIOS/uEFI are at the latest level.

**Related Links:**

- IBM Support Website
- Latest level of DSA
- Latest level of BMC/IMM

**201-861-003 Standalone Memory Test Aborted**

**Explanation:** No SRAT type 1 found.

**Severity:** Warning

**Serviceable:** No

**Recoverable:** No

**Automatically notify Support:** No

**User response:** Complete the following steps:

1. Perform the actions mentioned one at a time and try the test after each action.
2. If the problem remains, contact your technical-service representative.
3. Turn off the system and disconnect it from power. Wait for 45 seconds. Reseat DIMM(s). Reconnect it to power.
4. Make sure that DSA and BIOS/uEFI are at the latest level.

**Related Links:**

- IBM Support Website
- Latest level of DSA
- Latest level of BMC/IMM

**201-862-000 Standalone Memory Test Aborted**

**Explanation:** No OEM1 structure found.

**Severity:** Warning

**Serviceable:** No

**Recoverable:** No

**Automatically notify Support:** No

**User response:** Complete the following steps:

1. Perform the actions mentioned one at a time and try the test after each action.
2. If the problem remains, contact your technical-service representative.
3. Turn off the system and disconnect it from power. Wait for 45 seconds. Reseat DIMM(s). Reconnect it to power.
4. Make sure that DSA and BIOS/uEFI are at the latest level.

**Related Links:**

- IBM Support Website
- Latest level of DSA
- Latest level of BMC/IMM

**201-862-001 Standalone Memory Test Aborted**

**Explanation:** No OEM1 structure found.

**Severity:** Warning

**Serviceable:** No

**Recoverable:** No

**Automatically notify Support:** No

**User response:** Complete the following steps:

1. Perform the actions mentioned one at a time and try the test after each action.
2. If the problem remains, contact your technical-service representative.
3. Turn off the system and disconnect it from power. Wait for 45 seconds. Reseat DIMM(s). Reconnect it to power.
4. Make sure that DSA and BIOS/uEFI are at the latest level.

**Related Links:**

- IBM Support Website
- Latest level of DSA
- Latest level of BMC/IMM

**201-862-002 Standalone Memory Test Aborted**

**Explanation:** No OEM1 structure found.

**Severity:** Warning

**Serviceable:** No

**Recoverable:** No

**Automatically notify Support:** No

**User response:** Complete the following steps:

1. Perform the actions mentioned one at a time and try the test after each action.
2. If the problem remains, contact your technical-service representative.
3. Turn off the system and disconnect it from power. Wait for 45 seconds. Reseat DIMM(s). Reconnect it to power.
4. Make sure that DSA and BIOS/uEFI are at the latest level.

**Related Links:**

- IBM Support Website
- Latest level of DSA
- Latest level of BMC/IMM

**201-862-003 Standalone Memory Test Aborted**

**Explanation:** No OEM1 structure found.

**Severity:** Warning

**Serviceable:** No

**Recoverable:** No

**Automatically notify Support:** No

**User response:** Complete the following steps:

1. Perform the actions mentioned one at a time and try the test after each action.
2. If the problem remains, contact your technical-service representative.
3. Turn off the system and disconnect it from power. Wait for 45 seconds. Reseat DIMM(s). Reconnect it to power.
4. Make sure that DSA and BIOS/uEFI are at the latest level.

**Related Links:**

- IBM Support Website
- Latest level of DSA
- Latest level of BMC/IMM

**201-863-000 Standalone Memory Test Aborted**

**Explanation:** No IBMERROR key in OEM1 structure.

**Severity:** Warning

**Serviceable:** No

**Recoverable:** No

**Automatically notify Support:** No

**User response:** Complete the following steps:

1. Perform the actions mentioned one at a time and try the test after each action.
2. If the problem remains, contact your technical-service representative.
3. Turn off the system and disconnect it from power. Wait for 45 seconds. Reseat DIMM(s). Reconnect it to power.
4. Make sure that DSA and BIOS/uEFI are at the latest level.

**Related Links:**

- IBM Support Website
- Latest level of DSA
- Latest level of BMC/IMM

**201-863-001 Standalone Memory Test Aborted**

**Explanation:** No IBMERROR key in OEM1 structure.

**Severity:** Warning

**Serviceable:** No

**Recoverable:** No

**Automatically notify Support:** No

**User response:** Complete the following steps:

1. Perform the actions mentioned one at a time and try the test after each action.
2. If the problem remains, contact your technical-service representative.
3. Turn off the system and disconnect it from power. Wait for 45 seconds. Reseat DIMM(s). Reconnect it to power.
4. Make sure that DSA and BIOS/uEFI are at the latest level.

**Related Links:**

- IBM Support Website
- Latest level of DSA
- Latest level of BMC/IMM

**201-863-002 Standalone Memory Test Aborted**

**Explanation:** No IBMERROR key in OEM1 structure.

**Severity:** Warning

**Serviceable:** No

**Recoverable:** No

**Automatically notify Support:** No

**User response:** Complete the following steps:

1. Perform the actions mentioned one at a time and try the test after each action.
2. If the problem remains, contact your technical-service representative.
3. Turn off the system and disconnect it from power. Wait for 45 seconds. Reseat DIMM(s). Reconnect it to power.
4. Make sure that DSA and BIOS/uEFI are at the latest level.

**Related Links:**

- IBM Support Website
- Latest level of DSA
- Latest level of BMC/IMM

**201-863-003 Standalone Memory Test Aborted**

**Explanation:** No IBMERROR key in OEM1 structure.

**Severity:** Warning

**Serviceable:** No

**Recoverable:** No

**Automatically notify Support:** No

**User response:** Complete the following steps:

1. Perform the actions mentioned one at a time and try the test after each action.
2. If the problem remains, contact your technical-service representative.
3. Turn off the system and disconnect it from power. Wait for 45 seconds. Reseat DIMM(s). Reconnect it to power.
4. Make sure that DSA and BIOS/uEFI are at the latest level.

**Related Links:**

- IBM Support Website
- Latest level of DSA
- Latest level of BMC/IMM

**201-864-000 Standalone Memory Test Aborted**

**Explanation:** No GAS located in OEM1.

**Severity:** Warning

**Serviceable:** No

**Recoverable:** No

**Automatically notify Support:** No

**User response:** Complete the following steps:

1. Perform the actions mentioned one at a time and try the test after each action.
2. If the problem remains, contact your technical-service representative.
3. Turn off the system and disconnect it from power. Wait for 45 seconds. Reseat DIMM(s). Reconnect it to power.
4. Make sure that DSA and BIOS/uEFI are at the latest level.

**Related Links:**

- IBM Support Website
- Latest level of DSA
- Latest level of BMC/IMM

**201-864-001 Standalone Memory Test Aborted**

**Explanation:** No GAS located in OEM1.

**Severity:** Warning

**Serviceable:** No

**Recoverable:** No

**Automatically notify Support:** No

**User response:** Complete the following steps:

1. Perform the actions mentioned one at a time and try the test after each action.
2. If the problem remains, contact your technical-service representative.
3. Turn off the system and disconnect it from power. Wait for 45 seconds. Reseat DIMM(s). Reconnect it to power.
4. Make sure that DSA and BIOS/uEFI are at the latest level.

**Related Links:**

- IBM Support Website
- Latest level of DSA
- Latest level of BMC/IMM

**201-864-002 Standalone Memory Test Aborted**

**Explanation:** No GAS located in OEM1.

**Severity:** Warning

**Serviceable:** No

**Recoverable:** No

**Automatically notify Support:** No

**User response:** Complete the following steps:

1. Perform the actions mentioned one at a time and try the test after each action.
2. If the problem remains, contact your technical-service representative.
3. Turn off the system and disconnect it from power. Wait for 45 seconds. Reseat DIMM(s). Reconnect it to power.
4. Make sure that DSA and BIOS/uEFI are at the latest level.

**Related Links:**

- IBM Support Website
- Latest level of DSA
- Latest level of BMC/IMM

**201-864-003 Standalone Memory Test Aborted**

**Explanation:** No GAS located in OEM1.

**Severity:** Warning

**Serviceable:** No

**Recoverable:** No

**Automatically notify Support:** No

**User response:** Complete the following steps:

1. Perform the actions mentioned one at a time and try the test after each action.
2. If the problem remains, contact your technical-service representative.
3. Turn off the system and disconnect it from power. Wait for 45 seconds. Reseat DIMM(s). Reconnect it to power.
4. Make sure that DSA and BIOS/uEFI are at the latest level.

**Related Links:**

- IBM Support Website
- Latest level of DSA
- Latest level of BMC/IMM

**201-865-000 Standalone Memory Test Aborted**

**Explanation:** No XSECSRAT key in OEM0 structure.

**Severity:** Warning

**Serviceable:** No

**Recoverable:** No

**Automatically notify Support:** No

**User response:** Complete the following steps:

1. Perform the actions mentioned one at a time and try the test after each action.
2. If the problem remains, contact your technical-service representative.
3. Turn off the system and disconnect it from power. Wait for 45 seconds. Reseat DIMM(s). Reconnect it to power.
4. Make sure that DSA and BIOS/uEFI are at the latest level.

**Related Links:**

- IBM Support Website
- Latest level of DSA
- Latest level of BMC/IMM

**201-865-001 Standalone Memory Test Aborted**

**Explanation:** No XSECSRAT key in OEM0 structure.

**Severity:** Warning

**Serviceable:** No

**Recoverable:** No

**Automatically notify Support:** No

**User response:** Complete the following steps:

1. Perform the actions mentioned one at a time and try the test after each action.
2. If the problem remains, contact your technical-service representative.
3. Turn off the system and disconnect it from power. Wait for 45 seconds. Reseat DIMM(s). Reconnect it to power.
4. Make sure that DSA and BIOS/uEFI are at the latest level.

**Related Links:**

- IBM Support Website
- Latest level of DSA
- Latest level of BMC/IMM

**201-865-002 Standalone Memory Test Aborted**

**Explanation:** No XSECSRAT key in OEM0 structure.

**Severity:** Warning

**Serviceable:** No

**Recoverable:** No

**Automatically notify Support:** No

**User response:** Complete the following steps:

1. Perform the actions mentioned one at a time and try the test after each action.
2. If the problem remains, contact your technical-service representative.
3. Turn off the system and disconnect it from power. Wait for 45 seconds. Reseat DIMM(s). Reconnect it to power.
4. Make sure that DSA and BIOS/uEFI are at the latest level.

**Related Links:**

- IBM Support Website
- Latest level of DSA
- Latest level of BMC/IMM

**201-865-003 Standalone Memory Test Aborted**

**Explanation:** No XSECSRAT key in OEM0 structure.

**Severity:** Warning

**Serviceable:** No

**Recoverable:** No

**Automatically notify Support:** No

**User response:** Complete the following steps:

1. Perform the actions mentioned one at a time and try the test after each action.
2. If the problem remains, contact your technical-service representative.
3. Turn off the system and disconnect it from power. Wait for 45 seconds. Reseat DIMM(s). Reconnect it to power.
4. Make sure that DSA and BIOS/uEFI are at the latest level.

**Related Links:**

- IBM Support Website
- Latest level of DSA
- Latest level of BMC/IMM

**201-866-000 Standalone Memory Test Aborted**

**Explanation:** EFI-SAL Invalid parameter from GetMemoryMap function.

**Severity:** Warning

**Serviceable:** No

**Recoverable:** No

**Automatically notify Support:** No

**User response:** Complete the following steps:

1. Perform the actions mentioned one at a time and try the test after each action.
2. If the problem remains, contact your technical-service representative.
3. Turn off the system and disconnect it from power. Wait for 45 seconds. Reseat DIMM(s). Reconnect it to power.
4. Make sure that DSA and BIOS/uEFI are at the latest level.

**Related Links:**

- IBM Support Website
- Latest level of DSA
- Latest level of BMC/IMM

**201-866-001 Standalone Memory Test Aborted**

**Explanation:** EFI-SAL Invalid parameter from GetMemoryMap function.

**Severity:** Warning

**Serviceable:** No

**Recoverable:** No

**Automatically notify Support:** No

**User response:** Complete the following steps:

1. Perform the actions mentioned one at a time and try the test after each action.
2. If the problem remains, contact your technical-service representative.
3. Turn off the system and disconnect it from power. Wait for 45 seconds. Reseat DIMM(s). Reconnect it to power.
4. Make sure that DSA and BIOS/uEFI are at the latest level.

**Related Links:**

- IBM Support Website
- Latest level of DSA
- Latest level of BMC/IMM

**201-866-002 Standalone Memory Test Aborted**

**Explanation:** EFI-SAL Invalid parameter from GetMemoryMap function.

**Severity:** Warning

**Serviceable:** No

**Recoverable:** No

**Automatically notify Support:** No

**User response:** Complete the following steps:

1. Perform the actions mentioned one at a time and try the test after each action.
2. If the problem remains, contact your technical-service representative.
3. Turn off the system and disconnect it from power. Wait for 45 seconds. Reseat DIMM(s). Reconnect it to power.
4. Make sure that DSA and BIOS/uEFI are at the latest level.

**Related Links:**

- IBM Support Website
- Latest level of DSA
- Latest level of BMC/IMM

**201-866-003 Standalone Memory Test Aborted**

**Explanation:** EFI-SAL Invalid parameter from GetMemoryMap function.

**Severity:** Warning

**Serviceable:** No

**Recoverable:** No

**Automatically notify Support:** No

**User response:** Complete the following steps:

1. Perform the actions mentioned one at a time and try the test after each action.
2. If the problem remains, contact your technical-service representative.
3. Turn off the system and disconnect it from power. Wait for 45 seconds. Reseat DIMM(s). Reconnect it to power.
4. Make sure that DSA and BIOS/uEFI are at the latest level.

**Related Links:**

- IBM Support Website
- Latest level of DSA
- Latest level of BMC/IMM

**201-867-000 Standalone Memory Test Aborted**

**Explanation:** EFI/SAL: Buffer not allocated.

**Severity:** Warning

**Serviceable:** No

**Recoverable:** No

**Automatically notify Support:** No

**User response:** Complete the following steps:

1. Perform the actions mentioned one at a time and try the test after each action.
2. If the problem remains, contact your technical-service representative.
3. Turn off the system and disconnect it from power. Wait for 45 seconds. Reseat DIMM(s). Reconnect it to power.
4. Make sure that DSA and BIOS/uEFI are at the latest level.

**Related Links:**

- IBM Support Website
- Latest level of DSA
- Latest level of BMC/IMM

**201-867-001 Standalone Memory Test Aborted**

**Explanation:** EFI/SAL: Buffer not allocated.

**Severity:** Warning

**Serviceable:** No

**Recoverable:** No

**Automatically notify Support:** No

**User response:** Complete the following steps:

1. Perform the actions mentioned one at a time and try the test after each action.
2. If the problem remains, contact your technical-service representative.
3. Turn off the system and disconnect it from power. Wait for 45 seconds. Reseat DIMM(s). Reconnect it to power.
4. Make sure that DSA and BIOS/uEFI are at the latest level.

**Related Links:**

- IBM Support Website
- Latest level of DSA
- Latest level of BMC/IMM

**201-867-002 Standalone Memory Test Aborted**

**Explanation:** EFI/SAL: Buffer not allocated.

**Severity:** Warning

**Serviceable:** No

**Recoverable:** No

**Automatically notify Support:** No

**User response:** Complete the following steps:

1. Perform the actions mentioned one at a time and try the test after each action.
2. If the problem remains, contact your technical-service representative.
3. Turn off the system and disconnect it from power. Wait for 45 seconds. Reseat DIMM(s). Reconnect it to power.
4. Make sure that DSA and BIOS/uEFI are at the latest level.

**Related Links:**

- IBM Support Website
- Latest level of DSA
- Latest level of BMC/IMM

**201-867-003 Standalone Memory Test Aborted**

**Explanation:** EFI/SAL: Buffer not allocated.

**Severity:** Warning

**Serviceable:** No

**Recoverable:** No

**Automatically notify Support:** No

**User response:** Complete the following steps:

1. Perform the actions mentioned one at a time and try the test after each action.
2. If the problem remains, contact your technical-service representative.
3. Turn off the system and disconnect it from power. Wait for 45 seconds. Reseat DIMM(s). Reconnect it to power.
4. Make sure that DSA and BIOS/uEFI are at the latest level.

**Related Links:**

- IBM Support Website
- Latest level of DSA
- Latest level of BMC/IMM

**201-868-000 Standalone Memory Test Aborted**

**Explanation:** EFI/SAL: Buffer allocated in GetMemoryMap too small.

**Severity:** Warning

**Serviceable:** No

**Recoverable:** No

**Automatically notify Support:** No

**User response:** Complete the following steps:

1. Perform the actions mentioned one at a time and try the test after each action.
2. If the problem remains, contact your technical-service representative.
3. Turn off the system and disconnect it from power. Wait for 45 seconds. Reseat DIMM(s). Reconnect it to power.
4. Make sure that DSA and BIOS/uEFI are at the latest level.

**Related Links:**

- IBM Support Website
- Latest level of DSA
- Latest level of BMC/IMM

**201-868-001 Standalone Memory Test Aborted**

**Explanation:** EFI/SAL: Buffer allocated in GetMemoryMap too small.

**Severity:** Warning

**Serviceable:** No

**Recoverable:** No

**Automatically notify Support:** No

**User response:** Complete the following steps:

1. Perform the actions mentioned one at a time and try the test after each action.
2. If the problem remains, contact your technical-service representative.
3. Turn off the system and disconnect it from power. Wait for 45 seconds. Reseat DIMM(s). Reconnect it to power.
4. Make sure that DSA and BIOS/uEFI are at the latest level.

**Related Links:**

- IBM Support Website
- Latest level of DSA
- Latest level of BMC/IMM

**201-868-002 Standalone Memory Test Aborted**

**Explanation:** EFI/SAL: Buffer allocated in GetMemoryMap too small.

**Severity:** Warning

**Serviceable:** No

**Recoverable:** No

**Automatically notify Support:** No

**User response:** Complete the following steps:

1. Perform the actions mentioned one at a time and try the test after each action.
2. If the problem remains, contact your technical-service representative.
3. Turn off the system and disconnect it from power. Wait for 45 seconds. Reseat DIMM(s). Reconnect it to power.
4. Make sure that DSA and BIOS/uEFI are at the latest level.

**Related Links:**

- IBM Support Website
- Latest level of DSA
- Latest level of BMC/IMM

**201-868-003 Standalone Memory Test Aborted**

**Explanation:** EFI/SAL: Buffer allocated in GetMemoryMap too small.

**Severity:** Warning

**Serviceable:** No

**Recoverable:** No

**Automatically notify Support:** No

**User response:** Complete the following steps:

1. Perform the actions mentioned one at a time and try the test after each action.
2. If the problem remains, contact your technical-service representative.
3. Turn off the system and disconnect it from power. Wait for 45 seconds. Reseat DIMM(s). Reconnect it to power.
4. Make sure that DSA and BIOS/uEFI are at the latest level.

**Related Links:**

- IBM Support Website
- Latest level of DSA
- Latest level of BMC/IMM

**201-869-000 Standalone Memory Test Aborted**

**Explanation:** EFI/SAL Invalid parameter from GetMemoryMap function.

**Severity:** Warning

**Serviceable:** No

**Recoverable:** No

**Automatically notify Support:** No

**User response:** Complete the following steps:

1. Perform the actions mentioned one at a time and try the test after each action.
2. If the problem remains, contact your technical-service representative.
3. Turn off the system and disconnect it from power. Wait for 45 seconds. Reseat DIMM(s). Reconnect it to power.
4. Make sure that DSA and BIOS/uEFI are at the latest level.

**Related Links:**

- IBM Support Website
- Latest level of DSA
- Latest level of BMC/IMM

**201-869-001 Standalone Memory Test Aborted**

**Explanation:** EFI/SAL Invalid parameter from GetMemoryMap function.

**Severity:** Warning

**Serviceable:** No

**Recoverable:** No

**Automatically notify Support:** No

**User response:** Complete the following steps:

1. Perform the actions mentioned one at a time and try the test after each action.
2. If the problem remains, contact your technical-service representative.
3. Turn off the system and disconnect it from power. Wait for 45 seconds. Reseat DIMM(s). Reconnect it to power.
4. Make sure that DSA and BIOS/uEFI are at the latest level.

**Related Links:**

- IBM Support Website
- Latest level of DSA
- Latest level of BMC/IMM

**201-869-002 Standalone Memory Test Aborted**

**Explanation:** EFI/SAL Invalid parameter from GetMemoryMap function.

**Severity:** Warning

**Serviceable:** No

**Recoverable:** No

**Automatically notify Support:** No

**User response:** Complete the following steps:

1. Perform the actions mentioned one at a time and try the test after each action.
2. If the problem remains, contact your technical-service representative.
3. Turn off the system and disconnect it from power. Wait for 45 seconds. Reseat DIMM(s). Reconnect it to power.
4. Make sure that DSA and BIOS/uEFI are at the latest level.

**Related Links:**

- IBM Support Website
- Latest level of DSA
- Latest level of BMC/IMM

**201-869-003 Standalone Memory Test Aborted**

**Explanation:** EFI/SAL Invalid parameter from GetMemoryMap function.

**Severity:** Warning

**Serviceable:** No

**Recoverable:** No

**Automatically notify Support:** No

**User response:** Complete the following steps:

1. Perform the actions mentioned one at a time and try the test after each action.
2. If the problem remains, contact your technical-service representative.
3. Turn off the system and disconnect it from power. Wait for 45 seconds. Reseat DIMM(s). Reconnect it to power.
4. Make sure that DSA and BIOS/uEFI are at the latest level.

**Related Links:**

- IBM Support Website
- Latest level of DSA
- Latest level of BMC/IMM

**201-870-000 Standalone Memory Test Aborted**

**Explanation:** CPU Doamin in ACPI not valid.

**Severity:** Warning

**Serviceable:** No

**Recoverable:** No

**Automatically notify Support:** No

**User response:** Complete the following steps:

1. Perform the actions mentioned one at a time and try the test after each action.
2. If the problem remains, contact your technical-service representative.
3. Turn off the system and disconnect it from power. Wait for 45 seconds. Reseat DIMM(s). Reconnect it to power.
4. Make sure that DSA and BIOS/uEFI are at the latest level.

**Related Links:**

- IBM Support Website
- Latest level of DSA
- Latest level of BMC/IMM

**201-870-001 Standalone Memory Test Aborted**

**Explanation:** CPU Doamin in ACPI not valid.

**Severity:** Warning

**Serviceable:** No

**Recoverable:** No

**Automatically notify Support:** No

**User response:** Complete the following steps:

1. Perform the actions mentioned one at a time and try the test after each action.
2. If the problem remains, contact your technical-service representative.
3. Turn off the system and disconnect it from power. Wait for 45 seconds. Reseat DIMM(s). Reconnect it to power.
4. Make sure that DSA and BIOS/uEFI are at the latest level.

**Related Links:**

- IBM Support Website
- Latest level of DSA
- Latest level of BMC/IMM

**201-870-002 Standalone Memory Test Aborted**

**Explanation:** CPU Doamin in ACPI not valid.

**Severity:** Warning

**Serviceable:** No

**Recoverable:** No

**Automatically notify Support:** No

**User response:** Complete the following steps:

1. Perform the actions mentioned one at a time and try the test after each action.
2. If the problem remains, contact your technical-service representative.
3. Turn off the system and disconnect it from power. Wait for 45 seconds. Reseat DIMM(s). Reconnect it to power.
4. Make sure that DSA and BIOS/uEFI are at the latest level.

**Related Links:**

- IBM Support Website
- Latest level of DSA
- Latest level of BMC/IMM

**201-870-003 Standalone Memory Test Aborted**

**Explanation:** CPU Doamin in ACPI not valid.

**Severity:** Warning

**Serviceable:** No

**Recoverable:** No

**Automatically notify Support:** No

**User response:** Complete the following steps:

1. Perform the actions mentioned one at a time and try the test after each action.
2. If the problem remains, contact your technical-service representative.
3. Turn off the system and disconnect it from power. Wait for 45 seconds. Reseat DIMM(s). Reconnect it to power.
4. Make sure that DSA and BIOS/uEFI are at the latest level.

**Related Links:**

- IBM Support Website
- Latest level of DSA
- Latest level of BMC/IMM

**201-871-000 Standalone Memory Test Aborted**

**Explanation:** Data Mis-compare encountered.

**Severity:** Warning

**Serviceable:** No

**Recoverable:** No

**Automatically notify Support:** No

**User response:** Complete the following steps:

1. Perform the actions mentioned one at a time and try the test after each action.
2. If the problem remains, contact your technical-service representative.
3. Turn off the system and disconnect it from power. Wait for 45 seconds. Reseat DIMM(s). Reconnect it to power.
4. Make sure that DSA and BIOS/uEFI are at the latest level.

**Related Links:**

- IBM Support Website
- Latest level of DSA
- Latest level of BMC/IMM

**201-871-001 Standalone Memory Test Aborted**

**Explanation:** Data Mis-compare encountered.

**Severity:** Warning

**Serviceable:** No

**Recoverable:** No

**Automatically notify Support:** No

**User response:** Complete the following steps:

1. Perform the actions mentioned one at a time and try the test after each action.
2. If the problem remains, contact your technical-service representative.
3. Turn off the system and disconnect it from power. Wait for 45 seconds. Reseat DIMM(s). Reconnect it to power.
4. Make sure that DSA and BIOS/uEFI are at the latest level.

**Related Links:**

- IBM Support Website
- Latest level of DSA
- Latest level of BMC/IMM

**201-871-002 Standalone Memory Test Aborted**

**Explanation:** Data Mis-compare encountered.

**Severity:** Warning

**Serviceable:** No

**Recoverable:** No

**Automatically notify Support:** No

**User response:** Complete the following steps:

1. Perform the actions mentioned one at a time and try the test after each action.
2. If the problem remains, contact your technical-service representative.
3. Turn off the system and disconnect it from power. Wait for 45 seconds. Reseat DIMM(s). Reconnect it to power.
4. Make sure that DSA and BIOS/uEFI are at the latest level.

**Related Links:**

- IBM Support Website
- Latest level of DSA
- Latest level of BMC/IMM

**201-871-003 Standalone Memory Test Aborted**

**Explanation:** Data Mis-compare encountered.

**Severity:** Warning

**Serviceable:** No

**Recoverable:** No

**Automatically notify Support:** No

**User response:** Complete the following steps:

1. Perform the actions mentioned one at a time and try the test after each action.
2. If the problem remains, contact your technical-service representative.
3. Turn off the system and disconnect it from power. Wait for 45 seconds. Reseat DIMM(s). Reconnect it to power.
4. Make sure that DSA and BIOS/uEFI are at the latest level.

**Related Links:**

- IBM Support Website
- Latest level of DSA
- Latest level of BMC/IMM

**201-877-000 Standalone Memory Test Aborted**

**Explanation:** BIOS: Sparing in Extended PCI reg. must be OFF. Go to setup and disable sparing.

**Severity:** Warning

**Serviceable:** No

**Recoverable:** No

**Automatically notify Support:** No

**User response:** Complete the following steps:

1. Perform the actions mentioned one at a time and try the test after each action.
2. If the problem remains, contact your technical-service representative.
3. Turn off the system and disconnect it from power. Wait for 45 seconds. Reseat DIMM(s). Reconnect it to power.
4. Make sure that DSA and BIOS/uEFI are at the latest level.

**Related Links:**

- IBM Support Website
- Latest level of DSA
- Latest level of BMC/IMM

**201-877-001 Standalone Memory Test Aborted**

**Explanation:** BIOS: Sparing in Extended PCI reg. must be OFF. Go to setup and disable sparing.

**Severity:** Warning

**Serviceable:** No

**Recoverable:** No

**Automatically notify Support:** No

**User response:** Complete the following steps:

1. Perform the actions mentioned one at a time and try the test after each action.
2. If the problem remains, contact your technical-service representative.
3. Turn off the system and disconnect it from power. Wait for 45 seconds. Reseat DIMM(s). Reconnect it to power.
4. Make sure that DSA and BIOS/uEFI are at the latest level.

**Related Links:**

- IBM Support Website
- Latest level of DSA
- Latest level of BMC/IMM

**201-877-002 Standalone Memory Test Aborted**

**Explanation:** BIOS: Sparing in Extended PCI reg. must be OFF. Go to setup and disable sparing.

**Severity:** Warning

**Serviceable:** No

**Recoverable:** No

**Automatically notify Support:** No

**User response:** Complete the following steps:

1. Perform the actions mentioned one at a time and try the test after each action.
2. If the problem remains, contact your technical-service representative.
3. Turn off the system and disconnect it from power. Wait for 45 seconds. Reseat DIMM(s). Reconnect it to power.
4. Make sure that DSA and BIOS/uEFI are at the latest level.

**Related Links:**

- IBM Support Website
- Latest level of DSA
- Latest level of BMC/IMM

**201-877-003 Standalone Memory Test Aborted**

**Explanation:** BIOS: Sparing in Extended PCI reg. must be OFF. Go to setup and disable sparing.

**Severity:** Warning

**Serviceable:** No

**Recoverable:** No

**Automatically notify Support:** No

**User response:** Complete the following steps:

1. Perform the actions mentioned one at a time and try the test after each action.
2. If the problem remains, contact your technical-service representative.
3. Turn off the system and disconnect it from power. Wait for 45 seconds. Reseat DIMM(s). Reconnect it to power.
4. Make sure that DSA and BIOS/uEFI are at the latest level.

**Related Links:**

- IBM Support Website
- Latest level of DSA
- Latest level of BMC/IMM

**201-878-000 Standalone Memory Test Aborted**

**Explanation:** Sparing feature must be turned OFF. Go to setup and turn the sparing feature OFF.

**Severity:** Warning

**Serviceable:** No

**Recoverable:** No

**Automatically notify Support:** No

**User response:** Complete the following steps:

1. Perform the actions mentioned one at a time and try the test after each action.
2. If the problem remains, contact your technical-service representative.
3. Turn off the system and disconnect it from power. Wait for 45 seconds. Reseat DIMM(s). Reconnect it to power.
4. Make sure that DSA and BIOS/uEFI are at the latest level.

**Related Links:**

- IBM Support Website
- Latest level of DSA
- Latest level of BMC/IMM

**201-878-001 Standalone Memory Test Aborted**

**Explanation:** Sparing feature must be turned OFF. Go to setup and turn the sparing feature OFF.

**Severity:** Warning

**Serviceable:** No

**Recoverable:** No

**Automatically notify Support:** No

**User response:** Complete the following steps:

1. Perform the actions mentioned one at a time and try the test after each action.
2. If the problem remains, contact your technical-service representative.
3. Turn off the system and disconnect it from power. Wait for 45 seconds. Reseat DIMM(s). Reconnect it to power.
4. Make sure that DSA and BIOS/uEFI are at the latest level.

**Related Links:**

- IBM Support Website
- Latest level of DSA
- Latest level of BMC/IMM

**201-878-002 Standalone Memory Test Aborted**

**Explanation:** Sparing feature must be turned OFF. Go to setup and turn the sparing feature OFF.

**Severity:** Warning

**Serviceable:** No

**Recoverable:** No

**Automatically notify Support:** No

**User response:** Complete the following steps:

1. Perform the actions mentioned one at a time and try the test after each action.
2. If the problem remains, contact your technical-service representative.
3. Turn off the system and disconnect it from power. Wait for 45 seconds. Reseat DIMM(s). Reconnect it to power.
4. Make sure that DSA and BIOS/uEFI are at the latest level.

**Related Links:**

- IBM Support Website
- Latest level of DSA
- Latest level of BMC/IMM

**201-878-003 Standalone Memory Test Aborted**

**Explanation:** Sparing feature must be turned OFF. Go to setup and turn the sparing feature OFF.

**Severity:** Warning

**Serviceable:** No

**Recoverable:** No

**Automatically notify Support:** No

**User response:** Complete the following steps:

1. Perform the actions mentioned one at a time and try the test after each action.
2. If the problem remains, contact your technical-service representative.
3. Turn off the system and disconnect it from power. Wait for 45 seconds. Reseat DIMM(s). Reconnect it to power.
4. Make sure that DSA and BIOS/uEFI are at the latest level.

**Related Links:**

- IBM Support Website
- Latest level of DSA
- Latest level of BMC/IMM

**201-885-000 Standalone Memory Test Aborted**

**Explanation:** Processor does not support MTRR register manipulation. Can not write to memory without cache.

**Severity:** Warning

**Serviceable:** No

**Recoverable:** No

**Automatically notify Support:** No

**User response:** Complete the following steps:

1. Perform the actions mentioned one at a time and try the test after each action.
2. If the problem remains, contact your technical-service representative.
3. Turn off the system and disconnect it from power. Wait for 45 seconds. Reseat DIMM(s). Reconnect it to power.
4. Make sure that DSA and BIOS/uEFI are at the latest level.

**Related Links:**

- IBM Support Website
- Latest level of DSA
- Latest level of BMC/IMM

**201-885-001 Standalone Memory Test Aborted**

**Explanation:** Processor does not support MTRR register manipulation. Can not write to memory without cache.

**Severity:** Warning

**Serviceable:** No

**Recoverable:** No

**Automatically notify Support:** No

**User response:** Complete the following steps:

1. Perform the actions mentioned one at a time and try the test after each action.
2. If the problem remains, contact your technical-service representative.
3. Turn off the system and disconnect it from power. Wait for 45 seconds. Reseat DIMM(s). Reconnect it to power.
4. Make sure that DSA and BIOS/uEFI are at the latest level.

**Related Links:**

- IBM Support Website
- Latest level of DSA
- Latest level of BMC/IMM

**201-885-002 Standalone Memory Test Aborted**

**Explanation:** Processor does not support MTRR register manipulation. Can not write to memory without cache.

**Severity:** Warning

**Serviceable:** No

**Recoverable:** No

**Automatically notify Support:** No

**User response:** Complete the following steps:

1. Perform the actions mentioned one at a time and try the test after each action.
2. If the problem remains, contact your technical-service representative.
3. Turn off the system and disconnect it from power. Wait for 45 seconds. Reseat DIMM(s). Reconnect it to power.
4. Make sure that DSA and BIOS/uEFI are at the latest level.

**Related Links:**

- IBM Support Website
- Latest level of DSA
- Latest level of BMC/IMM

**201-885-003 Standalone Memory Test Aborted**

**Explanation:** Processor does not support MTRR register manipulation. Can not write to memory without cache.

**Severity:** Warning

**Serviceable:** No

**Recoverable:** No

**Automatically notify Support:** No

**User response:** Complete the following steps:

1. Perform the actions mentioned one at a time and try the test after each action.
2. If the problem remains, contact your technical-service representative.
3. Turn off the system and disconnect it from power. Wait for 45 seconds. Reseat DIMM(s). Reconnect it to power.
4. Make sure that DSA and BIOS/uEFI are at the latest level.

**Related Links:**

- IBM Support Website
- Latest level of DSA
- Latest level of BMC/IMM

**201-886-000 Standalone Memory Test Aborted**

**Explanation:** Memory Upper limit is less than 16 Mbytes.

**Severity:** Warning

**Serviceable:** No

**Recoverable:** No

**Automatically notify Support:** No

**User response:** Complete the following steps:

1. Perform the actions mentioned one at a time and try the test after each action.
2. If the problem remains, contact your technical-service representative.
3. Turn off the system and disconnect it from power. Wait for 45 seconds. Reseat DIMM(s). Reconnect it to power.
4. Make sure that DSA and BIOS/uEFI are at the latest level.

**Related Links:**

- IBM Support Website
- Latest level of DSA
- Latest level of BMC/IMM

**201-886-001 Standalone Memory Test Aborted**

**Explanation:** Memory Upper limit is less than 16 Mbytes.

**Severity:** Warning

**Serviceable:** No

**Recoverable:** No

**Automatically notify Support:** No

**User response:** Complete the following steps:

1. Perform the actions mentioned one at a time and try the test after each action.
2. If the problem remains, contact your technical-service representative.
3. Turn off the system and disconnect it from power. Wait for 45 seconds. Reseat DIMM(s). Reconnect it to power.
4. Make sure that DSA and BIOS/uEFI are at the latest level.

**Related Links:**

- IBM Support Website
- Latest level of DSA
- Latest level of BMC/IMM

**201-886-002 Standalone Memory Test Aborted**

**Explanation:** Memory Upper limit is less than 16 Mbytes.

**Severity:** Warning

**Serviceable:** No

**Recoverable:** No

**Automatically notify Support:** No

**User response:** Complete the following steps:

1. Perform the actions mentioned one at a time and try the test after each action.
2. If the problem remains, contact your technical-service representative.
3. Turn off the system and disconnect it from power. Wait for 45 seconds. Reseat DIMM(s). Reconnect it to power.
4. Make sure that DSA and BIOS/uEFI are at the latest level.

**Related Links:**

- IBM Support Website
- Latest level of DSA
- Latest level of BMC/IMM

**201-886-003 Standalone Memory Test Aborted**

**Explanation:** Memory Upper limit is less than 16 Mbytes.

**Severity:** Warning

**Serviceable:** No

**Recoverable:** No

**Automatically notify Support:** No

**User response:** Complete the following steps:

1. Perform the actions mentioned one at a time and try the test after each action.
2. If the problem remains, contact your technical-service representative.
3. Turn off the system and disconnect it from power. Wait for 45 seconds. Reseat DIMM(s). Reconnect it to power.
4. Make sure that DSA and BIOS/uEFI are at the latest level.

**Related Links:**

- IBM Support Website
- Latest level of DSA
- Latest level of BMC/IMM

**201-899-000 Standalone Memory Test Aborted**

**Explanation:** Memory Diagnostics Test Aborted by user.

**Severity:** Warning

**Serviceable:** No

**Recoverable:** No

**Automatically notify Support:** No

**Related Links:**

- IBM Support Website
- Latest level of DSA
- Latest level of BMC/IMM

**201-899-001 Standalone Memory Test Aborted**

**Explanation:** Memory Diagnostics Test Aborted by user.

**Severity:** Warning

**Serviceable:** No

**Recoverable:** No

**Automatically notify Support:** No

**Related Links:**

- IBM Support Website
- Latest level of DSA
- Latest level of BMC/IMM

**201-899-002 Standalone Memory Test Aborted**

**Explanation:** Memory Diagnostics Test Aborted by user.

**Severity:** Warning

**Serviceable:** No

**Recoverable:** No

**Automatically notify Support:** No

**Related Links:**
- IBM Support Website
- Latest level of DSA
- Latest level of BMC/IMM

**201-899-003 Standalone Memory Test Aborted**

**Explanation:** Memory Diagnostics Test Aborted by user.

**Severity:** Warning

**Serviceable:** No

**Recoverable:** No

**Automatically notify Support:** No

**Related Links:**
- IBM Support Website
- Latest level of DSA
- Latest level of BMC/IMM

**201-901-000 Standalone Memory Test Failed**

**Explanation:** Memory Diagnostics Test Failed.

**Severity:** Error

**Serviceable:** Yes

**Recoverable:** No

**Automatically notify Support:** No

**User response:** Complete the following steps:
1. Perform the actions mentioned one at a time and try the test after each action.
2. If the problem remains, contact your technical-service representative.
3. Turn off the system and disconnect it from power. Wait for 45 seconds. Reseat DIMM(s). Reconnect it to power.
4. Make sure that DSA and BIOS/uEFI are at the latest level.
5. Replace any DIMMS(s) mentioned in error, one by one.
6. Make sure that all DIMMs are enabled in the Configuration/Setup Utility program.
7. If failure remains, refer to "Troubleshooting by symptom" in the system "Installation and Service Guide" for the next corrective action.

**Related Links:**
- IBM Support Website
- Latest level of DSA
- Latest level of BMC/IMM

**201-901-001 Standalone Memory Test Failed**

**Explanation:** Memory Diagnostics Test Failed.

**Severity:** Error

**Serviceable:** Yes

**Recoverable:** No

**Automatically notify Support:** No

**User response:** Complete the following steps:

1. Perform the actions mentioned one at a time and try the test after each action.
2. If the problem remains, contact your technical-service representative.
3. Turn off the system and disconnect it from power. Wait for 45 seconds. Reseat DIMM(s). Reconnect it to power.
4. Make sure that DSA and BIOS/uEFI are at the latest level.
5. Replace any DIMMS(s) mentioned in error, one by one.
6. Make sure that all DIMMs are enabled in the Configuration/Setup Utility program.
7. If failure remains, refer to "Troubleshooting by symptom" in the system "Installation and Service Guide" for the next corrective action.

**Related Links:**

- IBM Support Website
- Latest level of DSA
- Latest level of BMC/IMM

**201-901-002 Standalone Memory Test Failed**

**Explanation:** Memory Diagnostics Test Failed.

**Severity:** Error

**Serviceable:** Yes

**Recoverable:** No

**Automatically notify Support:** No

**User response:** Complete the following steps:

1. Perform the actions mentioned one at a time and try the test after each action.
2. If the problem remains, contact your technical-service representative.
3. Turn off the system and disconnect it from power. Wait for 45 seconds. Reseat DIMM(s). Reconnect it to power.
4. Make sure that DSA and BIOS/uEFI are at the latest level.
5. Replace any DIMMS(s) mentioned in error, one by one.
6. Make sure that all DIMMs are enabled in the Configuration/Setup Utility program.
7. If failure remains, refer to "Troubleshooting by symptom" in the system "Installation and Service Guide" for the next corrective action.

**Related Links:**

- IBM Support Website
- Latest level of DSA
- Latest level of BMC/IMM

**201-901-003 Standalone Memory Test Failed**

**Explanation:** Memory Diagnostics Test Failed.

**Severity:** Error

**Serviceable:** Yes

**Recoverable:** No

**Automatically notify Support:** No

**User response:** Complete the following steps:

1. Perform the actions mentioned one at a time and try the test after each action.
2. If the problem remains, contact your technical-service representative.
3. Turn off the system and disconnect it from power. Wait for 45 seconds. Reseat DIMM(s). Reconnect it to power.
4. Make sure that DSA and BIOS/uEFI are at the latest level.
5. Replace any DIMMS(s) mentioned in error, one by one.
6. Make sure that all DIMMs are enabled in the Configuration/Setup Utility program.
7. If failure remains, refer to "Troubleshooting by symptom" in the system "Installation and Service Guide" for the next corrective action.

**Related Links:**

- IBM Support Website
- Latest level of DSA
- Latest level of BMC/IMM

## DSA memory stress test results

The following messages can result when you run the memory stress test.

**202-000-000 MemStr Test Passed**

**Explanation:** Test Passed.

**Severity:** Event

**Serviceable:** No

**Recoverable:** No

**Automatically notify Support:** No

**Related Links:**

- IBM Support Website
- Latest level of DSA
- Latest level of BMC/IMM

**202-801-000 MemStr Test Aborted**

**Explanation:** Internal program error.

**Severity:** Warning

**Serviceable:** Yes

**Recoverable:** No

**Automatically notify Support:** No

**User response:** Complete the following steps:

1. Turn off and restart the system.
2. Make sure that the DSA Diagnostic code is at the latest level.
3. Run the test again.
4. If the system has stopped responding, turn off and restart the system.
5. Check the system firmware level and upgrade if necessary.
6. Run the memory diagnostic to identify the specific failing DIMM.
7. If the failure remains, refer to "Troubleshooting by symptom" in the system "Installation and Service Guide" for the next corrective action.

**Related Links:**

- IBM Support Website
- Latest level of DSA
- Latest level of BMC/IMM

**202-802-000 MemStr Test Aborted**

**Explanation:** Memory size is insufficient to run the test. At least 1 GB is required.

**Severity:** Warning

**Serviceable:** Yes

**Recoverable:** No

**Automatically notify Support:** No

**Related Links:**

- IBM Support Website
- Latest level of DSA
- Latest level of BMC/IMM

**202-803-000 MemStr Test Aborted**

**Explanation:** User pressed Ctrl-C.

**Severity:** Warning

**Serviceable:** Yes

**Recoverable:** No

**Automatically notify Support:** No

**Related Links:**

- IBM Support Website
- Latest level of DSA
- Latest level of BMC/IMM

**202-901-000 MemStr Test Failed**

**Explanation:** Test Failed.

**Severity:** Error

**Serviceable:** Yes

**Recoverable:** No

**Automatically notify Support:** No

**User response:** Complete the following steps:

1. Execute the standard DSA memory diagnostics to validate all memory.
2. Make sure that the DSA Diagnostic code is at the latest level.
3. Turn off the system and disconnect it from power.
4. Reseat the memory cards and DIMMs.
5. Reconnect the system to power and turn the system on.
6. Run the test again.
7. Execute the standard DSA memory diagnostics to validate all memory.
8. If the failure remains, refer to "Troubleshooting by symptom" in the system "Installation and Service Guide" for the next corrective action.

**Related Links:**

- IBM Support Website
- Latest level of DSA
- Latest level of BMC/IMM

**202-902-000 MemStr Test Failed**

**Explanation:** Memory size is insufficient to run the test.

**Severity:** Error

**Serviceable:** Yes

**Recoverable:** No

**Automatically notify Support:** No

**User response:** Complete the following steps:

1. Ensure that all memory is enabled by checking the "Available System Memory" in the "Resource Utilization" section of the DSA Diagnostic Event log.
2. If necessary, access the Configuration/Setup Utility program by pressing F1 during system boot and enable all memory.
3. Make sure that the DSA Diagnostic code is at the latest level.
4. Run the test again.
5. Execute the standard DSA memory diagnostics to validate all memory.
6. If the failure remains, refer to "Troubleshooting by symptom" in the system "Installation and Service Guide" for the next corrective action.

**Related Links:**

- IBM Support Website
- Latest level of DSA
- Latest level of BMC/IMM

## DSA Nvidia GPU test results

The following messages can result when you run the Nvidia GPU test.

**409-000-000 NVIDIA User Diagnostic Test Passed**

**Explanation:** NVIDIA User Diagnostic test passed.

**Severity:** Event

**Serviceable:** No

**Recoverable:** No

**Automatically notify Support:** No

**Related Links:**

- IBM Support Website
- Latest level of DSA
- Latest level of BMC/IMM

**409-003-000 Nvidia::DiagnosticServiceProvider::Bandwidth Test Passed**

**Explanation:** Nvidia GPU Bandwidth test passed.

**Severity:** Event

**Serviceable:** No

**Recoverable:** No

**Automatically notify Support:** No

**Related Links:**
- IBM Support Website
- Latest level of DSA
- Latest level of BMC/IMM

**409-004-000 Nvidia::DiagnosticServiceProvider::Query Test Passed**

**Explanation:** Nvidia GPU Query test passed.

**Severity:** Event

**Serviceable:** No

**Recoverable:** No

**Automatically notify Support:** No

**Related Links:**
- IBM Support Website
- Latest level of DSA
- Latest level of BMC/IMM

**409-005-000 Nvidia::DiagnosticServiceProvider::Matrix Test Passed**

**Explanation:** Nvidia GPU Matrix test passed.

**Severity:** Event

**Serviceable:** No

**Recoverable:** No

**Automatically notify Support:** No

**Related Links:**
- IBM Support Website
- Latest level of DSA
- Latest level of BMC/IMM

**409-006-000 Nvidia::DiagnosticServiceProvider::Binomial Test Passed**

**Explanation:** Nvidia GPU Binomial test passed.

**Severity:** Event

**Serviceable:** No

**Recoverable:** No

**Automatically notify Support:** No

**Related Links:**
- IBM Support Website
- Latest level of DSA
- Latest level of BMC/IMM

**409-800-000 NVIDIA User Diagnostic Test Aborted**

**Explanation:** NVIDIA User Diagnostic test was canceled.

**Severity:** Event

**Serviceable:** No

**Recoverable:** No

**Automatically notify Support:** No

**Related Links:**
- IBM Support Website
- Latest level of DSA
- Latest level of BMC/IMM

**409-803-000 Nvidia::DiagnosticServiceProvider::Bandwidth Test Aborted**

**Explanation:** Nvidia GPU Bandwidth test was canceled.

**Severity:** Warning

**Serviceable:** No

**Recoverable:** No

**Automatically notify Support:** No

**Related Links:**
- IBM Support Website
- Latest level of DSA
- Latest level of BMC/IMM

**409-804-000 Nvidia::DiagnosticServiceProvider::Query Test Aborted**

**Explanation:** Nvidia GPU Query test was canceled.

**Severity:** Warning

**Serviceable:** No

**Recoverable:** No

**Automatically notify Support:** No

**Related Links:**
- IBM Support Website
- Latest level of DSA
- Latest level of BMC/IMM

**409-805-000 Nvidia::DiagnosticServiceProvider::Matrix Test Aborted**

**Explanation:** Nvidia GPU Matrix test was canceled.

**Severity:** Warning

**Serviceable:** No

**Recoverable:** No

**Automatically notify Support:** No

**Related Links:**
- IBM Support Website
- Latest level of DSA
- Latest level of BMC/IMM

**409-806-000 Nvidia::DiagnosticServiceProvider::Binomial Test Aborted**

**Explanation:** Nvidia GPU Binomial test was canceled.

**Severity:** Warning

**Serviceable:** No

**Recoverable:** No

**Automatically notify Support:** No

**Related Links:**
- IBM Support Website
- Latest level of DSA
- Latest level of BMC/IMM

**409-900-000 NVIDIA User Diagnostic Test Failed**

**Explanation:** NVIDIA User Diagnostic Test Failed.

**Severity:** Event

**Serviceable:** Yes

**Recoverable:** No

**Automatically notify Support:** No

**User response:** Complete the following steps:

1. Verify that the GPU is seated in the PCIe slot correctly by reseating the GPU. Then power cycle the system.
2. Verify that the power connectors to the GPU are connected firmly. Then power cycle the system.
3. Run nvidia-smi -q In some cases this will report a poorly connected power cable.
4. Rerun the diagnostics, using the same GPU, on system that is known to be working. A variety of system issues can cause diagnostic failure.
5. If the problem remains, contact your IBM technical-support representative.

**Related Links:**

- IBM Support Website
- Latest level of DSA
- Latest level of BMC/IMM

**409-903-000 Nvidia::DiagnosticServiceProvider::Bandwidth Test Failed**

**Explanation:** Nvidia GPU Bandwidth Test Failed.

**Severity:** Error

**Serviceable:** Yes

**Recoverable:** No

**Automatically notify Support:** No

**User response:** Complete the following steps:

1. Verify that the GPU is seated in the PCIe slot correctly by reseating the GPU. Then power cycle the system.
2. Verify that the power connectors to the GPU are connected firmly. Then power cycle the system.
3. Run nvidia-smi -q In some cases this will report a poorly connected power cable.
4. Rerun the diagnostics, using the same GPU, on system that is known to be working. A variety of system issues can cause diagnostic failure.
5. If the problem remains, contact your IBM technical-support representative.

**Related Links:**

- IBM Support Website
- Latest level of DSA
- Latest level of BMC/IMM

**409-904-000 Nvidia::DiagnosticServiceProvider::Query Test Failed**

**Explanation:** Nvidia GPU Query Test Failed.

**Severity:** Error

**Serviceable:** Yes

**Recoverable:** No

**Automatically notify Support:** No

**User response:** Complete the following steps:

1. Verify that the GPU is seated in the PCIe slot correctly by reseating the GPU. Then power cycle the system.
2. Verify that the power connectors to the GPU are connected firmly. Then power cycle the system.
3. Run nvidia-smi -q In some cases this will report a poorly connected power cable.
4. Rerun the diagnostics, using the same GPU, on system that is known to be working. A variety of system issues can cause diagnostic failure.
5. If the problem remains, contact your IBM technical-support representative.

**Related Links:**

- IBM Support Website
- Latest level of DSA
- Latest level of BMC/IMM

**409-905-000 Nvidia::DiagnosticServiceProvider::Matrix Test Failed**

**Explanation:** Nvidia GPU Matrix Test Failed.

**Severity:** Error

**Serviceable:** Yes

**Recoverable:** No

**Automatically notify Support:** No

**User response:** Complete the following steps:

1. Verify that the GPU is seated in the PCIe slot correctly by reseating the GPU. Then power cycle the system.
2. Verify that the power connectors to the GPU are connected firmly. Then power cycle the system.
3. Run nvidia-smi -q In some cases this will report a poorly connected power cable.
4. Rerun the diagnostics, using the same GPU, on system that is known to be working. A variety of system issues can cause diagnostic failure.
5. If the problem remains, contact your IBM technical-support representative.

**Related Links:**

- IBM Support Website
- Latest level of DSA
- Latest level of BMC/IMM

**409-906-000 Nvidia::DiagnosticServiceProvider::Binomial Test Failed**

**Explanation:** Nvidia GPU Binomial Test Failed.

**Severity:** Error

**Serviceable:** Yes

**Recoverable:** No

**Automatically notify Support:** No

**User response:** Complete the following steps:

1. Verify that the GPU is seated in the PCIe slot correctly by reseating the GPU. Then power cycle the system.
2. Verify that the power connectors to the GPU are connected firmly. Then power cycle the system.
3. Run nvidia-smi -q In some cases this will report a poorly connected power cable.
4. Rerun the diagnostics, using the same GPU, on system that is known to be working. A variety of system issues can cause diagnostic failure.
5. If the problem remains, contact your IBM technical-support representative.

**Related Links:**

- IBM Support Website
- Latest level of DSA
- Latest level of BMC/IMM

## DSA optical drive test results

The following messages can result when you run the optical drive test.

**215-000-000 Optical Drive Test Passed**

**Explanation:** Optical Drive Test Passed.

**Severity:** Event

**Serviceable:** No

**Recoverable:** No

**Automatically notify Support:** No

**Related Links:**

- IBM Support Website
- Latest level of DSA
- Latest level of BMC/IMM

**215-801-000 Optical Drive Test Aborted**

**Explanation:** Optical Drive Test Aborted. Unable to communicate with driver.

**Severity:** Warning

**Serviceable:** Yes

**Recoverable:** No

**Automatically notify Support:** No

**User response:** Complete the following steps:

1. Make sure that the DSA Diagnostic code is at the latest level.
2. Run the test again.
3. Check the drive cabling for loose or broken connections at both ends or damage to the cable. Replace the cable if damage is present.
4. Run the test again.
5. Check system firmware level and upgrade if necessary.The installed firmware level can be found in the DSA Diagnostic Event Log within the Firmware/VPD section for this component.
6. Run the test again.

**Related Links:**

- IBM Support Website
- Latest level of DSA
- Latest level of BMC/IMM

**215-802-000 Optical Drive Test Aborted**

**Explanation:** Optical Drive Test Aborted. A read error was encountered.

**Severity:** Warning

**Serviceable:** Yes

**Recoverable:** No

**Automatically notify Support:** No

**User response:** Complete the following steps:

1. Insert a new CD or DVD into the drive and wait for 15 seconds for the media to be recognized. Rerun the test.
2. Check the drive cabling for loose or broken connections at both ends or damage to the cable. Replace the cable if damage is present.
3. Run the test again.
4. If failure remains, refer to "Troubleshooting by symptom" in the system "Installation and Service Guide" for the next corrective action.

**Related Links:**

- IBM Support Website
- Latest level of DSA
- Latest level of BMC/IMM

**215-803-000 Optical Drive Test Failed**

**Explanation:** Optical Drive Test Failed. Disk may be in use by the operating system.

**Severity:** Error

**Serviceable:** Yes

**Recoverable:** No

**Automatically notify Support:** No

**User response:** Complete the following steps:

1. Wait for the system activity to cease
2. Run the test again
3. Turn off and restart the system.
4. Run the test again.

**Related Links:**

- IBM Support Website
- Latest level of DSA
- Latest level of BMC/IMM

**215-804-000 Optical Drive Test Aborted**

**Explanation:** Optical Drive Test Aborted. The media tray is open.

**Severity:** Warning

**Serviceable:** Yes

**Recoverable:** No

**Automatically notify Support:** No

**User response:** Complete the following steps:

1. Close the media tray and wait for 15 seconds for the media to be recognized. Run the test again.
2. Insert a new CD or DVD into the drive and wait for 15 seconds for the media to be recognized. Rerun the test.
3. Check the drive cabling for loose or broken connections at both ends or damage to the cable. Replace the cable if damage is present.
4. Run the test again.
5. If failure remains, refer to "Troubleshooting by symptom" in the system "Installation and Service Guide" for the next corrective action.

**Related Links:**

- IBM Support Website
- Latest level of DSA
- Latest level of BMC/IMM

**215-901-000 Optical Drive Test Aborted**

**Explanation:** Optical Drive Test Aborted. Drive media is not detected.

**Severity:** Warning

**Serviceable:** Yes

**Recoverable:** No

**Automatically notify Support:** No

**User response:** Complete the following steps:

1. Insert a new CD or DVD into the drive and wait for 15 seconds for the media to be recognized. Rerun the test.
2. Check the drive cabling for loose or broken connections at both ends or damage to the cable. Replace the cable if damage is present.
3. Run the test again.
4. If failure remains, refer to "Troubleshooting by symptom" in the system "Installation and Service Guide" for the next corrective action.

**Related Links:**

- IBM Support Website
- Latest level of DSA
- Latest level of BMC/IMM

**215-902-000 Optical Drive Test Failed**

**Explanation:** Optical Drive Test Failed. Read miscompare.

**Severity:** Error

**Serviceable:** Yes

**Recoverable:** No

**Automatically notify Support:** No

**User response:** Complete the following steps:

1. Insert a new CD or DVD into the drive and wait for 15 seconds for the media to be recognized. Rerun the test.
2. Check the drive cabling for loose or broken connections at both ends or damage to the cable. Replace the cable if damage is present.
3. Run the test again.
4. If failure remains, refer to "Troubleshooting by symptom" in the system "Installation and Service Guide" for the next corrective action.

**Related Links:**

- IBM Support Website
- Latest level of DSA
- Latest level of BMC/IMM

**215-903-000 Optical Drive Test Aborted**

**Explanation:** Optical Drive Test Aborted. Could not access the device.

**Severity:** Warning

**Serviceable:** Yes

**Recoverable:** No

**Automatically notify Support:** No

**User response:** Complete the following steps:

1. Insert a new CD or DVD into the drive and wait for 15 seconds for the media to be recognized. Rerun the test.
2. Check the drive cabling for loose or broken connections at both ends or damage to the cable. Replace the cable if damage is present.
3. Run the test again.
4. Check system firmware level and upgrade if necessary.The installed firmware level can be found in the DSA Diagnostic Event Log within the Firmware/VPD section for this component.
5. Run the test again.
6. If failure remains, refer to "Troubleshooting by symptom" in the system "Installation and Service Guide" for the next corrective action.

**Related Links:**

- IBM Support Website
- Latest level of DSA
- Latest level of BMC/IMM

## DSA system management test results

The following messages can result when you run the system management test.

**166-000-001 IMM I2C Test Passed**

**Explanation:** IMM I2C Test Passed.

**Severity:** Event

**Serviceable:** No

**Recoverable:** No

**Automatically notify Support:** No

**Related Links:**

- IBM Support Website
- Latest level of DSA
- Latest level of BMC/IMM

**166-801-001 IMM I2C Test Aborted**

**Explanation:** IMM returned incorrect response length.

**Severity:** Warning

**Serviceable:** Yes

**Recoverable:** No

**Automatically notify Support:** No

**User response:** Perform the actions mentioned one at a time and try the test after each action:

1. Turn off the system and disconnect it from power. Wait for 45 seconds. Reconnect it to power.
2. Make sure that DSA and BMC/IMM are at the latest level.

**Related Links:**

- IBM Support Website
- Latest level of DSA
- Latest level of BMC/IMM

**166-802-001 IMM I2C Test Aborted**

**Explanation:** Test cannot be completed for unknown reason.

**Severity:** Warning

**Serviceable:** Yes

**Recoverable:** No

**Automatically notify Support:** No

**User response:** Perform the actions mentioned one at a time and try the test after each action:

1. Turn off the system and disconnect it from power. Wait for 45 seconds. Reconnect it to power.
2. Make sure that DSA and BMC/IMM are at the latest level.

**Related Links:**

- IBM Support Website
- Latest level of DSA
- Latest level of BMC/IMM

**166-803-001 IMM I2C Test Aborted**

**Explanation:** Node Busy. Try later.

**Severity:** Warning

**Serviceable:** Yes

**Recoverable:** No

**Automatically notify Support:** No

**User response:** Perform the actions mentioned one at a time and try the test after each action:

1. Turn off the system and disconnect it from power. Wait for 45 seconds. Reconnect it to power.
2. Make sure that DSA and BMC/IMM are at the latest level.

**Related Links:**

- IBM Support Website
- Latest level of DSA
- Latest level of BMC/IMM

**166-804-001 IMM I2C Test Aborted**

**Explanation:** Invalid Command.

**Severity:** Warning

**Serviceable:** Yes

**Recoverable:** No

**Automatically notify Support:** No

**User response:** Perform the actions mentioned one at a time and try the test after each action:

1. Turn off the system and disconnect it from power. Wait for 45 seconds. Reconnect it to power.
2. Make sure that DSA and BMC/IMM are at the latest level.

**Related Links:**

- IBM Support Website
- Latest level of DSA
- Latest level of BMC/IMM

**166-805-001 IMM I2C Test Aborted**

**Explanation:** Invalid Command for given LUN.

**Severity:** Warning

**Serviceable:** Yes

**Recoverable:** No

**Automatically notify Support:** No

**User response:** Perform the actions mentioned one at a time and try the test after each action:

1. Turn off the system and disconnect it from power. Wait for 45 seconds. Reconnect it to power.
2. Make sure that DSA and BMC/IMM are at the latest level.

**Related Links:**

- IBM Support Website
- Latest level of DSA
- Latest level of BMC/IMM

**166-806-001 IMM I2C Test Aborted**

**Explanation:** Timeout while processing command.

**Severity:** Warning

**Serviceable:** Yes

**Recoverable:** No

**Automatically notify Support:** No

**User response:** Perform the actions mentioned one at a time and try the test after each action:

1. Turn off the system and disconnect it from power. Wait for 45 seconds. Reconnect it to power.
2. Make sure that DSA and BMC/IMM are at the latest level.

**Related Links:**

- IBM Support Website
- Latest level of DSA
- Latest level of BMC/IMM

**166-807-001 IMM I2C Test Aborted**

**Explanation:** Out of space.

**Severity:** Warning

**Serviceable:** Yes

**Recoverable:** No

**Automatically notify Support:** No

**User response:** Perform the actions mentioned one at a time and try the test after each action:

1. Turn off the system and disconnect it from power. Wait for 45 seconds. Reconnect it to power.
2. Make sure that DSA and BMC/IMM are at the latest level.

**Related Links:**

- IBM Support Website
- Latest level of DSA
- Latest level of BMC/IMM

---

**166-808-001 IMM I2C Test Aborted**

**Explanation:** Reservation Canceled or Invalid Reservation ID.

**Severity:** Warning

**Serviceable:** Yes

**Recoverable:** No

**Automatically notify Support:** No

**User response:** Perform the actions mentioned one at a time and try the test after each action:

1. Turn off the system and disconnect it from power. Wait for 45 seconds. Reconnect it to power.
2. Make sure that DSA and BMC/IMM are at the latest level.

**Related Links:**

- IBM Support Website
- Latest level of DSA
- Latest level of BMC/IMM

---

**166-809-001 IMM I2C Test Aborted**

**Explanation:** Request data truncated.

**Severity:** Warning

**Serviceable:** Yes

**Recoverable:** No

**Automatically notify Support:** No

**User response:** Perform the actions mentioned one at a time and try the test after each action:

1. Turn off the system and disconnect it from power. Wait for 45 seconds. Reconnect it to power.
2. Make sure that DSA and BMC/IMM are at the latest level.

**Related Links:**

- IBM Support Website
- Latest level of DSA
- Latest level of BMC/IMM

**166-810-001 IMM I2C Test Aborted**

**Explanation:** Request data length invalid.

**Severity:** Warning

**Serviceable:** Yes

**Recoverable:** No

**Automatically notify Support:** No

**User response:** Perform the actions mentioned one at a time and try the test after each action:

1. Turn off the system and disconnect it from power. Wait for 45 seconds. Reconnect it to power.
2. Make sure that DSA and BMC/IMM are at the latest level.

**Related Links:**

- IBM Support Website
- Latest level of DSA
- Latest level of BMC/IMM

**166-811-001 IMM I2C Test Aborted**

**Explanation:** Request data field length limit exceeded.

**Severity:** Warning

**Serviceable:** Yes

**Recoverable:** No

**Automatically notify Support:** No

**User response:** Perform the actions mentioned one at a time and try the test after each action:

1. Turn off the system and disconnect it from power. Wait for 45 seconds. Reconnect it to power.
2. Make sure that DSA and BMC/IMM are at the latest level.

**Related Links:**

- IBM Support Website
- Latest level of DSA
- Latest level of BMC/IMM

**166-812-001 IMM I2C Test Aborted**

**Explanation:** Parameter out of range.

**Severity:** Warning

**Serviceable:** Yes

**Recoverable:** No

**Automatically notify Support:** No

**User response:** Perform the actions mentioned one at a time and try the test after each action:

1. Turn off the system and disconnect it from power. Wait for 45 seconds. Reconnect it to power.
2. Make sure that DSA and BMC/IMM are at the latest level.

**Related Links:**

- IBM Support Website
- Latest level of DSA
- Latest level of BMC/IMM

**166-813-001 IMM I2C Test Aborted**

**Explanation:** Cannot return number of requested data bytes.

**Severity:** Warning

**Serviceable:** Yes

**Recoverable:** No

**Automatically notify Support:** No

**User response:** Perform the actions mentioned one at a time and try the test after each action:

1. Turn off the system and disconnect it from power. Wait for 45 seconds. Reconnect it to power.
2. Make sure that DSA and BMC/IMM are at the latest level.

**Related Links:**

- IBM Support Website
- Latest level of DSA
- Latest level of BMC/IMM

**166-814-001 IMM I2C Test Aborted**

**Explanation:** Requested Sensor, data, or record not present.

**Severity:** Warning

**Serviceable:** Yes

**Recoverable:** No

**Automatically notify Support:** No

**User response:** Perform the actions mentioned one at a time and try the test after each action:

1. Turn off the system and disconnect it from power. Wait for 45 seconds. Reconnect it to power.
2. Make sure that DSA and BMC/IMM are at the latest level.

**Related Links:**

- IBM Support Website
- Latest level of DSA
- Latest level of BMC/IMM

**166-815-001 IMM I2C Test Aborted**

**Explanation:** Invalid data field in Request.

**Severity:** Warning

**Serviceable:** Yes

**Recoverable:** No

**Automatically notify Support:** No

**User response:** Perform the actions mentioned one at a time and try the test after each action:

1. Turn off the system and disconnect it from power. Wait for 45 seconds. Reconnect it to power.
2. Make sure that DSA and BMC/IMM are at the latest level.

**Related Links:**

- IBM Support Website
- Latest level of DSA
- Latest level of BMC/IMM

**166-816-001 IMM I2C Test Aborted**

**Explanation:** Command illegal for specified sensor or record type.

**Severity:** Warning

**Serviceable:** Yes

**Recoverable:** No

**Automatically notify Support:** No

**User response:** Perform the actions mentioned one at a time and try the test after each action:

1. Turn off the system and disconnect it from power. Wait for 45 seconds. Reconnect it to power.
2. Make sure that DSA and BMC/IMM are at the latest level.

**Related Links:**

- IBM Support Website
- Latest level of DSA
- Latest level of BMC/IMM

**166-817-001 IMM I2C Test Aborted**

**Explanation:** Command response could not be provided.

**Severity:** Warning

**Serviceable:** Yes

**Recoverable:** No

**Automatically notify Support:** No

**User response:** Perform the actions mentioned one at a time and try the test after each action:

1. Turn off the system and disconnect it from power. Wait for 45 seconds. Reconnect it to power.
2. Make sure that DSA and BMC/IMM are at the latest level.

**Related Links:**

- IBM Support Website
- Latest level of DSA
- Latest level of BMC/IMM

**166-818-001 IMM I2C Test Aborted**

**Explanation:** Cannot execute duplicated request.

**Severity:** Warning

**Serviceable:** Yes

**Recoverable:** No

**Automatically notify Support:** No

**User response:** Perform the actions mentioned one at a time and try the test after each action:

1. Turn off the system and disconnect it from power. Wait for 45 seconds. Reconnect it to power.
2. Make sure that DSA and BMC/IMM are at the latest level.

**Related Links:**

- IBM Support Website
- Latest level of DSA
- Latest level of BMC/IMM

**166-819-001 IMM I2C Test Aborted**

**Explanation:** Command response could not be provided. SDR Repository in?update mode.

**Severity:** Warning

**Serviceable:** Yes

**Recoverable:** No

**Automatically notify Support:** No

**User response:** Perform the actions mentioned one at a time and try the test after each action:

1. Turn off the system and disconnect it from power. Wait for 45 seconds. Reconnect it to power.
2. Make sure that DSA and BMC/IMM are at the latest level.

**Related Links:**

- IBM Support Website
- Latest level of DSA
- Latest level of BMC/IMM

**166-820-001 IMM I2C Test Aborted**

**Explanation:** Command response could not be provided. Device in firmware update mode.

**Severity:** Warning

**Serviceable:** Yes

**Recoverable:** No

**Automatically notify Support:** No

**User response:** Perform the actions mentioned one at a time and try the test after each action:

1. Turn off the system and disconnect it from power. Wait for 45 seconds. Reconnect it to power.
2. Make sure that DSA and BMC/IMM are at the latest level.

**Related Links:**

- IBM Support Website
- Latest level of DSA
- Latest level of BMC/IMM

**166-821-001 IMM I2C Test Aborted**

**Explanation:** Command response could not be provided. BMC initialization in progress.

**Severity:** Warning

**Serviceable:** Yes

**Recoverable:** No

**Automatically notify Support:** No

**User response:** Perform the actions mentioned one at a time and try the test after each action:

1. Turn off the system and disconnect it from power. Wait for 45 seconds. Reconnect it to power.
2. Make sure that DSA and BMC/IMM are at the latest level.

**Related Links:**

- IBM Support Website
- Latest level of DSA
- Latest level of BMC/IMM

**166-822-001 IMM I2C Test Aborted**

**Explanation:** Destination unavailable.

**Severity:** Warning

**Serviceable:** Yes

**Recoverable:** No

**Automatically notify Support:** No

**User response:** Perform the actions mentioned one at a time and try the test after each action:

1. Turn off the system and disconnect it from power. Wait for 45 seconds. Reconnect it to power.
2. Make sure that DSA and BMC/IMM are at the latest level.

**Related Links:**

- IBM Support Website
- Latest level of DSA
- Latest level of BMC/IMM

**166-823-001 IMM I2C Test Aborted**

**Explanation:** Cannot execute command. Insufficient privilege level.

**Severity:** Warning

**Serviceable:** Yes

**Recoverable:** No

**Automatically notify Support:** No

**User response:** Perform the actions mentioned one at a time and try the test after each action:

1. Turn off the system and disconnect it from power. Wait for 45 seconds. Reconnect it to power.
2. Make sure that DSA and BMC/IMM are at the latest level.

**Related Links:**

- IBM Support Website
- Latest level of DSA
- Latest level of BMC/IMM

**166-824-001 IMM I2C Test Aborted**

**Explanation:** Cannot execute command.

**Severity:** Warning

**Serviceable:** Yes

**Recoverable:** No

**Automatically notify Support:** No

**User response:** Perform the actions mentioned one at a time and try the test after each action:

1. Turn off the system and disconnect it from power. Wait for 45 seconds. Reconnect it to power.
2. Make sure that DSA and BMC/IMM are at the latest level.

**Related Links:**

- IBM Support Website
- Latest level of DSA
- Latest level of BMC/IMM

**166-904-001 IMM I2C Test Failed**

**Explanation:** IMM Indicates failure in PCA9557--I2C I/O Expander bus (BUS 3).

**Severity:** Error

**Serviceable:** Yes

**Recoverable:** No

**Automatically notify Support:** No

**User response:** Perform the actions mentioned one at a time and try the test after each action:

1. Turn off the system and disconnect it from power. Wait for 45 seconds. Reconnect it to power.
2. Make sure that DSA and BMC/IMM are at the latest level.
3. Run the test again.
4. If failure remains, refer to "Troubleshooting by symptom" in the system "Installation and Service Guide" for the next corrective action.

**Related Links:**

- IBM Support Website
- Latest level of DSA
- Latest level of BMC/IMM

**166-907-001 IMM I2C Test Failed**

**Explanation:** IMM Indicates failure in PCA9545--4-Channel I2C Switch bus (BUS 6).

**Severity:** Error

**Serviceable:** Yes

**Recoverable:** No

**Automatically notify Support:** No

**User response:** Perform the actions mentioned one at a time and try the test after each action:

1. Turn off the system and disconnect it from power. Wait for 45 seconds. Reconnect it to power.
2. Make sure that DSA and BMC/IMM are at the latest level.
3. Run the test again.
4. If failure remains, refer to "Troubleshooting by symptom" in the system "Installation and Service Guide" for the next corrective action.

**Related Links:**

- IBM Support Website
- Latest level of DSA
- Latest level of BMC/IMM

**166-908-001 IMM I2C Test Failed**

**Explanation:** IMM Indicates failure in PCA9545 --failure in 4-Channel I2C Switch bus (BUS 7).

**Severity:** Error

**Serviceable:** Yes

**Recoverable:** No

**Automatically notify Support:** No

**User response:** Perform the actions mentioned one at a time and try the test after each action:

1. Turn off the system and disconnect it from power. Wait for 45 seconds. Reconnect it to power.
2. Make sure that DSA and BMC/IMM are at the latest level.
3. Run the test again.
4. If failure remains, refer to "Troubleshooting by symptom" in the system "Installation and Service Guide" for the next corrective action.

**Related Links:**

- IBM Support Website
- Latest level of DSA
- Latest level of BMC/IMM

## DSA tape drive test results

The following messages can result when you run the tape drive test.

**264-000-000 Tape Test Passed**

**Explanation:** Tape Test Passed.

**Severity:** Event

**Serviceable:** No

**Recoverable:** No

**Automatically notify Support:** No

**Related Links:**

- IBM Support Website
- Latest level of DSA
- Latest level of BMC/IMM

**264-901-000 Tape Test Failed**

**Explanation:** An error was found in the tape alert log.

**Severity:** Error

**Serviceable:** Yes

**Recoverable:** No

**Automatically notify Support:** No

**User response:** Complete the following steps:

1. Clean the tape drive using the appropriate cleaning media and install new media.
2. Run the test again.
3. Clear the error log.
4. Run the test again.
5. Make sure that the drive firmware is at the latest level.
6. Rerun the test after upgrading to the latest firmware level.
7. If the failure remains, refer to "Troubleshooting by symptom" in the system "Installation and Service Guide" for the next corrective action.

**Related Links:**

- IBM Support Website
- Latest level of DSA
- Latest level of BMC/IMM

**264-902-000 Tape Test Failed**

**Explanation:** Tape Test Failed. Media is not detected.

**Severity:** Error

**Serviceable:** Yes

**Recoverable:** No

**Automatically notify Support:** No

**User response:** Complete the following steps:

1. Clean the tape drive using the appropriate cleaning media and install new media.
2. Run the test again.
3. Make sure that the drive firmware is at the latest level.
4. Rerun the test after upgrading to the latest firmware level.
5. If the failure remains, refer to "Troubleshooting by symptom" in the system "Installation and Service Guide" for the next corrective action.

**Related Links:**

- IBM Support Website
- Latest level of DSA
- Latest level of BMC/IMM

**264-903-000 Tape Test Failed**

**Explanation:** Tape Test Failed. Media is not detected.

**Severity:** Error

**Serviceable:** Yes

**Recoverable:** No

**Automatically notify Support:** No

**User response:** Complete the following steps:

1. Clean the tape drive using the appropriate cleaning media and install new media.
2. Run the test again.
3. Make sure that the drive firmware is at the latest level.
4. Rerun the test after upgrading to the latest firmware level.
5. If the failure remains, refer to "Troubleshooting by symptom" in the system "Installation and Service Guide" for the next corrective action.

**Related Links:**

- IBM Support Website
- Latest level of DSA
- Latest level of BMC/IMM

**264-904-000 Tape Test Failed**

**Explanation:** Tape Test Failed. Drive hardware error.

**Severity:** Error

**Serviceable:** Yes

**Recoverable:** No

**Automatically notify Support:** No

**User response:** Complete the following steps:

1. Check the tape drive cabling for loose or broken connections or damage to the cable. Replace the cable if damage is present.
2. Clean the tape drive using the appropriate cleaning media and install new media.
3. Run the test again.
4. Make sure that the drive firmware is at the latest level.
5. Rerun the test after upgrading to the latest firmware level.
6. If the failure remains, refer to "Troubleshooting by symptom" in the system "Installation and Service Guide" for the next corrective action.

**Related Links:**

- IBM Support Website
- Latest level of DSA
- Latest level of BMC/IMM

**264-905-000 Tape Test Failed**

**Explanation:** Tape Test Failed. Software error: invalid request.

**Severity:** Error

**Serviceable:** Yes

**Recoverable:** No

**Automatically notify Support:** No

**User response:** Complete the following steps:

1. If the system has stopped responding, turn off and restart the system.
2. Check the system firmware level and upgrade if necessary. The installed firmware level can be found in the DSA Diagnostic Event Log within the Firmware/VPD section for this component.
3. Run the test again.
4. If the system has stopped responding, turn off and restart the system.
5. Make sure that the drive firmware is at the latest level.
6. Run the test again.
7. If the failure remains, refer to "Troubleshooting by symptom" in the system "Installation and Service Guide" for the next corrective action.

**Related Links:**

- IBM Support Website
- Latest level of DSA
- Latest level of BMC/IMM

**264-906-000 Tape Test Failed**

**Explanation:** Tape Test Failed. Unrecognized error.

**Severity:** Error

**Serviceable:** Yes

**Recoverable:** No

**Automatically notify Support:** No

**User response:** Complete the following steps:

1. Clean the tape drive using the appropriate cleaning media and install new media.
2. Run the test again.
3. Make sure that the drive firmware is at the latest level.
4. Rerun the test after upgrading to the latest firmware level.
5. Make sure that the DSA Diagnostic code is at the latest level.
6. Run the test again.
7. Check the system firmware level and upgrade if necessary.
8. Run the test again.
9. If the failure remains, refer to "Troubleshooting by symptom" in the system "Installation and Service Guide" for the next corrective action.

**Related Links:**

- IBM Support Website
- Latest level of DSA
- Latest level of BMC/IMM

**264-907-000 Tape Test Failed**

**Explanation:** An error was found in the block address somewhere.

**Severity:** Error

**Serviceable:** Yes

**Recoverable:** No

**Automatically notify Support:** No

**User response:** Complete the following steps:

1. Clean the tape drive using the appropriate cleaning media and install new media.

**Related Links:**

- IBM Support Website
- Latest level of DSA
- Latest level of BMC/IMM

**264-908-000 Tape Test Failed**

**Explanation:** An error was found in getting tape capacity.

**Severity:** Error

**Serviceable:** Yes

**Recoverable:** No

**Automatically notify Support:** No

**User response:** Complete the following steps:

1. Make sure that medium is present.
2. Clean the tape drive using the appropriate cleaning media and install new media.

**Related Links:**

- IBM Support Website
- Latest level of DSA
- Latest level of BMC/IMM

# Appendix D. Getting help and technical assistance

If you need help, service, or technical assistance or just want more information about IBM products, you will find a wide variety of sources available from IBM to assist you.

Use this information to obtain additional information about IBM and IBM products, determine what to do if you experience a problem with your IBM system or optional device, and determine whom to call for service, if it is necessary.

## Before you call

Before you call, make sure that you have taken these steps to try to solve the problem yourself.

If you believe that you require IBM to perform warranty service on your IBM product, the IBM service technicians will be able to assist you more efficiently if you prepare before you call.

- Check all cables to make sure that they are connected.
- Check the power switches to make sure that the system and any optional devices are turned on.
- Check for updated software, firmware, and operating-system device drivers for your IBM product. The IBM Warranty terms and conditions state that you, the owner of the IBM product, are responsible for maintaining and updating all software and firmware for the product (unless it is covered by an additional maintenance contract). Your IBM service technician will request that you upgrade your software and firmware if the problem has a documented solution within a software upgrade.
- If you have installed new hardware or software in your environment, check http://www.ibm.com/systems/info/x86servers/serverproven/compat/us/ to make sure that the hardware and software is supported by your IBM product.
- Go to http://www.ibm.com/supportportal to check for information to help you solve the problem.
- Gather the following information to provide to IBM Support. This data will help IBM Support quickly provide a solution to your problem and ensure that you receive the level of service for which you might have contracted.
  - Hardware and Software Maintenance agreement contract numbers, if applicable
  - Machine type number (IBM 4-digit machine identifier)
  - Model number
  - Serial number
  - Current system UEFI and firmware levels
  - Other pertinent information such as error messages and logs
- Go to http://www.ibm.com/support/entry/portal/Open_service_request to submit an Electronic Service Request. Submitting an Electronic Service Request will start the process of determining a solution to your problem by making the pertinent information available to IBM Support quickly and efficiently. IBM service technicians can start working on your solution as soon as you have completed and submitted an Electronic Service Request.

© Copyright IBM Corp. 2014

You can solve many problems without outside assistance by following the troubleshooting procedures that IBM provides in the online help or in the documentation that is provided with your IBM product. The documentation that comes with IBM systems also describes the diagnostic tests that you can perform. Most systems, operating systems, and programs come with documentation that contains troubleshooting procedures and explanations of error messages and error codes. If you suspect a software problem, see the documentation for the operating system or program.

## Using the documentation

Information about your IBM system and preinstalled software, if any, or optional device is available in the documentation that comes with the product. That documentation can include printed documents, online documents, readme files, and help files.

See the troubleshooting information in your system documentation for instructions for using the diagnostic programs. The troubleshooting information or the diagnostic programs might tell you that you need additional or updated device drivers or other software. IBM maintains pages on the World Wide Web where you can get the latest technical information and download device drivers and updates. To access these pages, go to http://www.ibm.com/supportportal.

## Getting help and information from the World Wide Web

Up-to-date information about IBM products and support is available on the World Wide Web.

On the World Wide Web, up-to-date information about IBM systems, optional devices, services, and support is available at http://www.ibm.com/supportportal. IBM System x information is at http://www.ibm.com/systems/x/. IBM BladeCenter information is at http://www.ibm.com/systems/bladecenter. IBM IntelliStation information is at http://www.ibm.com/systems/intellistation.

## How to send DSA data to IBM

Use the IBM Enhanced Customer Data Repository to send diagnostic data to IBM.

Before you send diagnostic data to IBM, read the terms of use at http://www.ibm.com/de/support/ecurep/terms.html.

You can use any of the following methods to send diagnostic data to IBM:

- **Standard upload:** http://www.ibm.com/de/support/ecurep/send_http.html
- **Standard upload with the system serial number:** http://www.ecurep.ibm.com/app/upload_hw
- **Secure upload:** http://www.ibm.com/de/support/ecurep/send_http.html#secure
- **Secure upload with the system serial number:** https://www.ecurep.ibm.com/app/upload_hw

## Creating a personalized support web page

You can create a personalized support web page by identifying IBM products that are of interest to you.

To create a personalized support web page, go to http://www.ibm.com/support/mynotifications. From this personalized page, you can subscribe to weekly email notifications about new technical documents, search for information and downloads, and access various administrative services.

## Software service and support

Through IBM Support Line, you can get telephone assistance, for a fee, with usage, configuration, and software problems with your IBM products.

For more information about Support Line and other IBM services, see http://www.ibm.com/services or see http://www.ibm.com/planetwide for support telephone numbers. In the U.S. and Canada, call 1-800-IBM-SERV (1-800-426-7378).

## Hardware service and support

You can receive hardware service through your IBM reseller or IBM Services.

To locate a reseller authorized by IBM to provide warranty service, go to http://www.ibm.com/partnerworld/ and click **Business Partner Locator**. For IBM support telephone numbers, see http://www.ibm.com/planetwide. In the U.S. and Canada, call 1-800-IBM-SERV (1-800-426-7378).

In the U.S. and Canada, hardware service and support is available 24 hours a day, 7 days a week. In the U.K., these services are available Monday through Friday, from 9 a.m. to 6 p.m.

## IBM Taiwan product service

Use this information to contact IBM Taiwan product service.

台灣 IBM 產品服務聯絡方式：
台灣國際商業機器股份有限公司
台北市松仁路 7 號 3 樓
電話：0800-016-888

IBM Taiwan product service contact information:

IBM Taiwan Corporation
3F, No 7, Song Ren Rd.
Taipei, Taiwan
Telephone: 0800-016-888

# Notices

This information was developed for products and services offered in the U.S.A.

IBM may not offer the products, services, or features discussed in this document in other countries. Consult your local IBM representative for information on the products and services currently available in your area. Any reference to an IBM product, program, or service is not intended to state or imply that only that IBM product, program, or service may be used. Any functionally equivalent product, program, or service that does not infringe any IBM intellectual property right may be used instead. However, it is the user's responsibility to evaluate and verify the operation of any non-IBM product, program, or service.

IBM may have patents or pending patent applications covering subject matter described in this document. The furnishing of this document does not give you any license to these patents. You can send license inquiries, in writing, to:

*IBM Director of Licensing*
*IBM Corporation*
*North Castle Drive*
*Armonk, NY 10504-1785*
*U.S.A.*

INTERNATIONAL BUSINESS MACHINES CORPORATION PROVIDES THIS PUBLICATION "AS IS" WITHOUT WARRANTY OF ANY KIND, EITHER EXPRESS OR IMPLIED, INCLUDING, BUT NOT LIMITED TO, THE IMPLIED WARRANTIES OF NON-INFRINGEMENT, MERCHANTABILITY OR FITNESS FOR A PARTICULAR PURPOSE. Some states do not allow disclaimer of express or implied warranties in certain transactions, therefore, this statement may not apply to you.

This information could include technical inaccuracies or typographical errors. Changes are periodically made to the information herein; these changes will be incorporated in new editions of the publication. IBM may make improvements and/or changes in the product(s) and/or the program(s) described in this publication at any time without notice.

Any references in this information to non-IBM websites are provided for convenience only and do not in any manner serve as an endorsement of those websites. The materials at those websites are not part of the materials for this IBM product, and use of those websites is at your own risk.

IBM may use or distribute any of the information you supply in any way it believes appropriate without incurring any obligation to you.

© Copyright IBM Corp. 2014

## Trademarks

IBM, the IBM logo, and ibm.com are trademarks of International Business Machines Corp., registered in many jurisdictions worldwide. Other product and service names might be trademarks of IBM or other companies.

A current list of IBM trademarks is available on the web at http://www.ibm.com/legal/us/en/copytrade.shtml.

Adobe and PostScript are either registered trademarks or trademarks of Adobe Systems Incorporated in the United States and/or other countries.

Cell Broadband Engine is a trademark of Sony Computer Entertainment, Inc., in the United States, other countries, or both and is used under license therefrom.

Intel, Intel Xeon, Itanium, and Pentium are trademarks or registered trademarks of Intel Corporation or its subsidiaries in the United States and other countries.

Java and all Java-based trademarks and logos are trademarks or registered trademarks of Oracle and/or its affiliates.

Linux is a registered trademark of Linus Torvalds in the United States, other countries, or both.

Microsoft, Windows, and Windows NT are trademarks of Microsoft Corporation in the United States, other countries, or both.

UNIX is a registered trademark of The Open Group in the United States and other countries.

## Important notes

Processor speed indicates the internal clock speed of the microprocessor; other factors also affect application performance.

CD or DVD drive speed is the variable read rate. Actual speeds vary and are often less than the possible maximum.

When referring to processor storage, real and virtual storage, or channel volume, KB stands for 1024 bytes, MB stands for 1,048,576 bytes, and GB stands for 1,073,741,824 bytes.

When referring to hard disk drive capacity or communications volume, MB stands for 1,000,000 bytes, and GB stands for 1,000,000,000 bytes. Total user-accessible capacity can vary depending on operating environments.

Maximum internal hard disk drive capacities assume the replacement of any standard hard disk drives and population of all hard disk drive bays with the largest currently supported drives that are available from IBM.

Maximum memory might require replacement of the standard memory with an optional memory module.

Each solid-state memory cell has an intrinsic, finite number of write cycles that the cell can incur. Therefore, a solid-state device has a maximum number of write cycles that it can be subjected to, expressed as `total bytes written` (TBW). A

device that has exceeded this limit might fail to respond to system-generated commands or might be incapable of being written to. IBM is not responsible for replacement of a device that has exceeded its maximum guaranteed number of program/erase cycles, as documented in the Official Published Specifications for the device.

IBM makes no representation or warranties regarding non-IBM products and services that are ServerProven®, including but not limited to the implied warranties of merchantability and fitness for a particular purpose. These products are offered and warranted solely by third parties.

IBM makes no representations or warranties with respect to non-IBM products. Support (if any) for the non-IBM products is provided by the third party, not IBM.

Some software might differ from its retail version (if available) and might not include user manuals or all program functionality.

## Particulate contamination

**Attention:** Airborne particulates (including metal flakes or particles) and reactive gases acting alone or in combination with other environmental factors such as humidity or temperature might pose a risk to the device that is described in this document.

Risks that are posed by the presence of excessive particulate levels or concentrations of harmful gases include damage that might cause the device to malfunction or cease functioning altogether. This specification sets forth limits for particulates and gases that are intended to avoid such damage. The limits must not be viewed or used as definitive limits, because numerous other factors, such as temperature or moisture content of the air, can influence the impact of particulates or environmental corrosives and gaseous contaminant transfer. In the absence of specific limits that are set forth in this document, you must implement practices that maintain particulate and gas levels that are consistent with the protection of human health and safety. If IBM determines that the levels of particulates or gases in your environment have caused damage to the device, IBM may condition provision of repair or replacement of devices or parts on implementation of appropriate remedial measures to mitigate such environmental contamination. Implementation of such remedial measures is a customer responsibility.

*Table 18. Limits for particulates and gases*

| Contaminant | Limits |
|---|---|
| Particulate | • The room air must be continuously filtered with 40% atmospheric dust spot efficiency (MERV 9) according to ASHRAE Standard 52.2[1].<br>• Air that enters a data center must be filtered to 99.97% efficiency or greater, using high-efficiency particulate air (HEPA) filters that meet MIL-STD-282.<br>• The deliquescent relative humidity of the particulate contamination must be more than 60%[2].<br>• The room must be free of conductive contamination such as zinc whiskers. |
| Gaseous | • Copper: Class G1 as per ANSI/ISA 71.04-1985[3]<br>• Silver: Corrosion rate of less than 300 Å in 30 days |

*Table 18. Limits for particulates and gases (continued)*

| Contaminant | Limits |
|---|---|
| [1] ASHRAE 52.2-2008 - *Method of Testing General Ventilation Air-Cleaning Devices for Removal Efficiency by Particle Size*. Atlanta: American Society of Heating, Refrigerating and Air-Conditioning Engineers, Inc.<br>[2] The deliquescent relative humidity of particulate contamination is the relative humidity at which the dust absorbs enough water to become wet and promote ionic conduction.<br>[3] ANSI/ISA-71.04-1985. *Environmental conditions for process measurement and control systems: Airborne contaminants*. Instrument Society of America, Research Triangle Park, North Carolina, U.S.A. | |

## Documentation format

The publications for this product are in Adobe Portable Document Format (PDF) and should be compliant with accessibility standards. If you experience difficulties when you use the PDF files and want to request a web-based format or accessible PDF document for a publication, direct your mail to the following address:

*Information Development*
*IBM Corporation*
*205/A015*
*3039 E. Cornwallis Road*
*P.O. Box 12195*
*Research Triangle Park, North Carolina 27709-2195*
*U.S.A.*

In the request, be sure to include the publication part number and title.

When you send information to IBM, you grant IBM a nonexclusive right to use or distribute the information in any way it believes appropriate without incurring any obligation to you.

## Telecommunication regulatory statement

This product may not be certified in your country for connection by any means whatsoever to interfaces of public telecommunications networks. Further certification may be required by law prior to making any such connection. Contact an IBM representative or reseller for any questions.

## Electronic emission notices

When you attach a monitor to the equipment, you must use the designated monitor cable and any interference suppression devices that are supplied with the monitor.

### Federal Communications Commission (FCC) statement

**Note:** This equipment has been tested and found to comply with the limits for a Class A digital device, pursuant to Part 15 of the FCC Rules. These limits are designed to provide reasonable protection against harmful interference when the equipment is operated in a commercial environment. This equipment generates, uses, and can radiate radio frequency energy and, if not installed and used in accordance with the instruction manual, may cause harmful interference to radio communications. Operation of this equipment in a residential area is likely to cause harmful interference, in which case the user will be required to correct the interference at his own expense.

Properly shielded and grounded cables and connectors must be used in order to meet FCC emission limits. IBM is not responsible for any radio or television interference caused by using other than recommended cables and connectors or by unauthorized changes or modifications to this equipment. Unauthorized changes or modifications could void the user's authority to operate the equipment.

This device complies with Part 15 of the FCC Rules. Operation is subject to the following two conditions: (1) this device may not cause harmful interference, and (2) this device must accept any interference received, including interference that might cause undesired operation.

### Industry Canada Class A emission compliance statement

This Class A digital apparatus complies with Canadian ICES-003.

### Avis de conformité à la réglementation d'Industrie Canada

Cet appareil numérique de la classe A est conforme à la norme NMB-003 du Canada.

### Australia and New Zealand Class A statement

**Attention:** This is a Class A product. In a domestic environment this product may cause radio interference in which case the user may be required to take adequate measures.

## European Union EMC Directive conformance statement

This product is in conformity with the protection requirements of EU Council Directive 2004/108/EC on the approximation of the laws of the Member States relating to electromagnetic compatibility. IBM cannot accept responsibility for any failure to satisfy the protection requirements resulting from a nonrecommended modification of the product, including the fitting of non-IBM option cards.

**Attention:** This is an EN 55022 Class A product. In a domestic environment this product may cause radio interference in which case the user may be required to take adequate measures.

Responsible manufacturer:

International Business Machines Corp.
New Orchard Road
Armonk, New York 10504
914-499-1900

European Community contact:

IBM Deutschland GmbH
Technical Regulations, Department M372
IBM-Allee 1, 71139 Ehningen, Germany
Telephone: +49 7032 15 2941
Email: lugi@de.ibm.com

## Germany Class A statement

**Deutschsprachiger EU Hinweis: Hinweis für Geräte der Klasse A EU-Richtlinie zur Elektromagnetischen Verträglichkeit**

Dieses Produkt entspricht den Schutzanforderungen der EU-Richtlinie 2004/108/EG zur Angleichung der Rechtsvorschriften über die elektromagnetische Verträglichkeit in den EU-Mitgliedsstaaten und hält die Grenzwerte der EN 55022 Klasse A ein.

Um dieses sicherzustellen, sind die Geräte wie in den Handbüchern beschrieben zu installieren und zu betreiben. Des Weiteren dürfen auch nur von der IBM empfohlene Kabel angeschlossen werden. IBM übernimmt keine Verantwortung für die Einhaltung der Schutzanforderungen, wenn das Produkt ohne Zustimmung der IBM verändert bzw. wenn Erweiterungskomponenten von Fremdherstellern ohne Empfehlung der IBM gesteckt/eingebaut werden.

EN 55022 Klasse A Geräte müssen mit folgendem Warnhinweis versehen werden:
**Warnung:** Dieses ist eine Einrichtung der Klasse A. Diese Einrichtung kann im Wohnbereich Funk-Störungen verursachen; in diesem Fall kann vom Betreiber verlangt werden, angemessene Maßnahmen zu ergreifen und dafür aufzukommen.

### Deutschland: Einhaltung des Gesetzes über die elektromagnetische Verträglichkeit von Geräten

Dieses Produkt entspricht dem Gesetz über die elektromagnetische Verträglichkeit von Geräten (EMVG). Dies ist die Umsetzung der EU-Richtlinie 2004/108/EG in der Bundesrepublik Deutschland.

### Zulassungsbescheinigung laut dem Deutschen Gesetz über die elektromagnetische Verträglichkeit von Geräten (EMVG) (bzw. der EMC EG Richtlinie 2004/108/EG) für Geräte der Klasse A

Dieses Gerät ist berechtigt, in Übereinstimmung mit dem Deutschen EMVG das EG-Konformitätszeichen - CE - zu führen.

Verantwortlich für die Einhaltung der EMV Vorschriften ist der Hersteller:

International Business Machines Corp.
New Orchard Road
Armonk, New York 10504
914-499-1900

Der verantwortliche Ansprechpartner des Herstellers in der EU ist:

IBM Deutschland GmbH
Technical Regulations, Abteilung M372
IBM-Allee 1, 71139 Ehningen, Germany
Telephone: +49 7032 15 2941
Email: lugi@de.ibm.com

**Generelle Informationen:**

**Das Gerät erfüllt die Schutzanforderungen nach EN 55024 und EN 55022 Klasse A.**

## Japan VCCI Class A statement

この装置は、クラス A 情報技術装置です。この装置を家庭環境で使用すると電波妨害を引き起こすことがあります。この場合には使用者が適切な対策を講ずるよう要求されることがあります。 VCCI-A

This is a Class A product based on the standard of the Voluntary Control Council for Interference (VCCI). If this equipment is used in a domestic environment, radio interference may occur, in which case the user may be required to take corrective actions.

## Japan Electronics and Information Technology Industries Association (JEITA) statement

高調波ガイドライン準用品

Japan Electronics and Information Technology Industries Association (JEITA) Confirmed Harmonics Guidelines with Modifications (products greater than 20 A per phase)

## Korea Communications Commission (KCC) statement

이 기기는 업무용(A급)으로 전자파적합기기로서 판매자 또는 사용자는 이 점을 주의하시기 바라며, 가정외의 지역에서 사용하는 것을 목적으로 합니다.

This is electromagnetic wave compatibility equipment for business (Type A). Sellers and users need to pay attention to it. This is for any areas other than home.

## Russia Electromagnetic Interference (EMI) Class A statement

ВНИМАНИЕ! Настоящее изделие относится к классу А.
В жилых помещениях оно может создавать радиопомехи, для снижения которых необходимы дополнительные меры

## People's Republic of China Class A electronic emission statement

声　　明

此为 A 级产品。在生活环境中，
该产品可能会造成无线电干扰。
在这种情况下，可能需要用户对其
干扰采取切实可行的措施。

## Taiwan Class A compliance statement

警告使用者:
這是甲類的資訊產品，在居住的環境中使用時，可能會造成射頻干擾，在這種情況下，使用者會被要求採取某些適當的對策。

# Index

## Numerics


2.5-inch hard disk drive
  cable connection 133
2.5-inch hard disk drive cable connection 133
2.5-inch hot-swap hard disk drive
  backplanes 36
2.5-inch simple-swap hard disk drive backplate assemblies
    36
2.5-inch/3.5-inch simple-swap/hot-swap hard disk drive backplate assemblies and backplanes 36
3.5-inch hot-swap hard disk drive
  backplanes 36
3.5-inch simple-swap hard disk drive backplate assemblies
    36
8x 2.5-inch hot-swap HDD assembly kit
  installing 291
8x 2.5-inch hot-swap HDD assembly kit, installing 291
8x 2.5-inch hot-swap HDD assembly with expander kit
  installing 297
8x 2.5-inch hot-swap HDD assembly with expander kit, installing 297
8x 2.5-inch simple-swap HDD ServeRAID assembly kit
  installing 286
8x 2.5-inch simple-swap HDD ServeRAID assembly kit, installing 286
8x 3.5-inch simple-swap HDD ServeRAID assembly kit
  installing 289
8x 3.5-inch simple-swap HDD ServeRAID assembly kit, installing 289


## A


ABR, automatic boot recovery 119
AC power-supply
  LEDs 78
AC power-supply LEDs 78
accessible documentation 980
acoustical noise emissions 8
Active Energy Manager plug-in 13
active memory 13
adapter
  removing 185, 188
    in a riser-card assembly 185
    rear two hard-disk-drive kit 189
  replacing 190, 195, 197
adapter, installation 190, 197
  PCI expansion slot 4 or slot 5 195
adapter, supported 190, 195, 197
administrator
  password 55
air baffle
  removing 148
air baffle *(continued)*
  replacing 149
an optical drive
  removing 163
ASM event log 82
assertion event, system-event log 81
assistance, getting 973
attention notices 7
Australia Class A statement 981
automatic boot recovery (ABR) 119
availability, server 17


## B


backup firmware
  starting 55
battery, system
  removing 241
  replacing 243
before you install a legacy operating system 47
blue-screen capture feature
  overview 57
blue-screen feature 57
Boot Manager 55
Boot Manager program 44
button, presence detection 21
buttons
  system board 30


## C


cabling 131
  12x3.5-inch drive backplane 144
  3.5-inch drive backplane 142
  8x3.5-inch drive backplane 142
  the 16x2.5-inch hot-swap drive backplane 135
  the 24x2.5-inch hot-swap drive backplane 138
  the 8x2.5-inch hot-swap drive backplane 133
  VGA 132
call home feature
  IBM Electronic Service Agent 88
call home tools 87
Canada Class A electronic emission statement 981
caution statements 7
checkout procedure 74
  performing 75
China Class A electronic emission statement 984
Class A electronic emission notice 981
collecting data 71
components
  server 27, 121
configuration
  information 43
  instructions 43
configuration *(continued)*
  Nx-boot failure 120
  ServerGuide Setup and Installation CD 43
  Setup utility 43
configuration cable,
  routing 133, 135, 138, 142, 144
configuration programs 44
configuring
  RAID arrays 61
  with ServerGuide 47
configuring hardware 44
configuring your server 43
connector
  USB 19
  video
    front 19
connectors
  external 29
  internal 29
contamination, particulate and gaseous 979
controller
  Ethernet 61
controls and LEDs
  operator information panel 21
controls, LEDs, and power 18
cooling 13
creating a personalized support web page 975
custom support web page 975


## D


danger statements 7
data collection 71
deassertion event, system-event log 81
dedicated slotless RAID controller
  removing 183
  replacing 184
device drivers 56
devices, static-sensitive
  handling 285
diagnostic
  on-board programs, starting 86
  tools, overview 76
diagnostic codes and messages
  POST/UEFI 817
diagnostics
  program overview 84
diagnostics program
  DSA Preboot 13
dimension 8
DIMM
  installing 167
  memory
    two-DIMM-per-channel (2DPC) 167
  removing 166
  replacing 170


© Copyright IBM Corp. 2014

DIMM *(continued)*
two-DIMM-per-channel (2DPC) requirement 167
DIMM installation sequence 170
display problems 97
documentation 6
CD 5
Documentation Browser 5
format 980
updates 1
using 974
documentation, updated
finding 6
drive backplane, 12x3.5-inch
cabling 144
drive backplane, 16x2.5-inch hot-swap
cabling 135
drive backplane, 24x2.5-inch hot-swap
cabling 138
drive backplane, 3.5-inch
cabling 142
drive backplane, 8x2.5-inch hot-swap
cabling 133
drive backplane, 8x3.5-inch
cabling 142
DSA 303
edition 85
program, overview 84
test log, viewing 87
text message format 87
DSA log 81, 82
DSA Portable 76, 85
DSA Preboot 76, 85
DSA, sending data to IBM 303, 974
DVD
drive activity LED 19
eject button 19
DVD drive
problems 89
Dynamic System Analysis 303
Dynamic System Analysis (DSA) Preboot diagnostics program 13

# E

EIA
removing 206
replacing 216
electronic emission Class A notice 981
embedded hypervisor
using 60
enabling
Features on Demand
Ethernet software 61
RAID software 61
Enterprise X-Architecture technology 13
error codes and messages
IMM2 305
error messages 88
error symptoms
DVD drive 89
general 90
hard disk drive 90
hypervisor flash device 92
intermittent 93
keyboard 93
memory 95
error symptoms *(continued)*
microprocessor 96
monitor 97
mouse 93
network connection 99
optional devices 99
power 101
serial port 109
ServerGuide 109
software 110
USB port 111
USB-device 93
video 97, 111
errors
format, DSA code 87
Ethernet 13
controller 114
Ethernet controller configuration 44
Ethernet support 13
European Union EMC Directive conformance statement 982
event log 81
viewing 82
event log, POST 81
event log, system 81
event logs
clearing 83
event logs, methods for viewing 82
expansion slot locations 26
external connectors 29

# F

fan cage assembly
removing 172
replacing 173
fans 13
FCC Class A notice 981
features 8
ServerGuide 47
Features on Demand 13
finding
updated documentation 6
firmware
updates 1
firmware updates 1
firmware, server, recovering 117
firmware, updating 43
front
view 19
front USB assembly
removing 152
replacing 152
front view
connectors 19
LED location 19

# G

gaseous contamination 979
general
problems 90
Germany Class A statement 982
grease, thermal 273
guidelines
options installation 283
guidelines *(continued)*
system reliability 284

# H

handling static-sensitive devices 285
hard disk drive
activity LED 19
problems 90
status LED 19
hardware
requirements 5
hardware RAID cable,
routing 133, 135, 138, 142, 144
hardware service and support telephone numbers 975
hardware, configuring 44
heat sink
removing 258
replacing 264
heat-sink retention module
removing 274
replacing 275
help
from the World Wide Web 974
from World Wide Web 974
sending diagnostic data to IBM 303, 974
sources of 973
hot-swap ac power supply
removing 228
replacing 229
hot-swap drive backplane
removing 232, 235
replacing 233
simple-swap drive backplate assembly 233
simple-swap drive backplate assembly
replacing 233
hot-swap fan
removing 174
replacing 175
hot-swap hard disk drive
replacing 155
hot-swap hard disk drives
removing 154
hypervisor flash device
problems 92

# I

IBM Advanced Settings Utility program
overview 62
IBM Electronic Service Agent 88
IBM Systems Director 13
systems management tool 16
updating 62
IBM Taiwan product service 975
IMM host name 58
IMM web interface 59
IMM2 44
error messages 305
IMM2 heartbeat
LED 80
important notices 7, 978

in-band
automated boot recovery method 119
manual recovery method 117
information center 974
installation
guidelines 283
installation guidelines 283
installing
8x 2.5-inch hot-swap HDD assembly kit 291
8x 2.5-inch hot-swap HDD assembly with expander kit 297
8x 2.5-inch simple-swap HDD ServeRAID assembly kit 286
8x 3.5-inch simple-swap HDD ServeRAID assembly kit 289
DIMM 167
media cage 178
memory module 167
optional devices 282
instructions
IBM Business Partners 303
integrated management module
overview 13
using 56
integrated management module II
error messages 305
event log 81, 82
programs 44
intermittent
problems 93
internal connectors 29
introduction 1
IP address for the IMM 58
IPMI event log 81, 82
IPMItool 82

## J

Japan Class A electronic emission statement 983
Japan Electronics and Information Technology Industries Association statement 984
JEITA statement 984
jumper
UEFI boot recovery 117
jumpers
system board 30

## K

Korea Class A electronic emission statement 984

## L

LCD
system information display panel 22
LCD system information display panel 22
removing 245
replacing 248
LED 21
DVD drive activity 19
hard disk drive activity 19
LED *(continued)*
hard disk drive status 19
IMM2 heartbeat 80
power-on 21
RTMM heartbeat 80
system information 21
system locator 21
system-error 21
LEDs
AC power-supply 78
on the PCI riser-card 80
power-supply 78
riser-card assembly 35
system board 33
legacy operating system
requirement 47
License Agreement for Machine Code 6
Licenses and Attributions Documents 6
light path diagnostics 13
light path diagnostics panel
location 19
local area network (LAN) 13
logging 59

## M

management, system 13
media cage
installing 178
removing 176
memory 13
memory module
installing 167
removing 166
memory support 13
menu choices
Setup utility 49
messages, diagnostic
POST/UEFI 817
method 119
methods, viewing event logs 82
microprocessor 13
problems 96
removing 258
replacing 264
model name
location 116

## N

New Zealand Class A statement 981
NMI button 24
NOS installation
with ServerGuide 47
without ServerGuide 48
notes 7
notes, important 978
notices 977
electronic emission 981
FCC, Class A 981
notices and statements 7
Nx-boot failure 120

## O

obtaining 58
online documentation 1
online publications 6
operating-system event log 81, 82
operator information panel
controls and LEDs 21
removing 254
replacing 255
operator information panel release latch 19
Optical drive
replacing 164
optical drive cable
removing 160
replacing 161
optional device problems 99
optional devices
installing 282
out-of-band 119

## P

particulate contamination 979
parts listing 121
parts, structural 128
password 53
administrator 53
power-on 53
password, power-on
switch on system board 53
PCI riser slots
installation configurations 190
supported configurations 190
PCI riser-card
LEDs location 80
slot connectors 33
PCI riser-card adapter expansion slot connectors 33
PCI riser-card adapter expansion slot locations 26
People's Republic of China Class A electronic emission statement 984
POST
event log 82
POST event log 81
POST/UEFI
diagnostic codes 817
power
power-control button 21
power cable,
routing 133, 135, 138, 142, 144
power cords 129
power features
server 40
power paddle module
removing 150
replacing 151
power problems 101, 111
power-on LED 21, 40
power-supply
LEDs 78
power-supply LEDs 78
presence detection button 21
problems
DVD drive 89

problems *(continued)*
Ethernet controller 114
general 90
hard disk drive 90
hypervisor flash device 92
IMM2 305
intermittent 93
keyboard 93
memory 95
microprocessor 96
monitor 97
mouse 93
network connection 99
optional devices 99
power 101, 111
serial port 109
ServerGuide 109
software 110
undetermined 115
USB port 111
video 97, 111
procedure, checkout 75
product service, IBM Taiwan 975
publications
online 1
product data 1

# R

rack release latches 19
RAID adapter
remote battery
removing 198
replacing 199
RAID arrays
configuring 61
RAS features, server 17
rear
view 24
rear two hard-disk-drive kit
removing 200
replacing 202
rear view
connectors 24
LED location 24
recovering the server firmware 117
redundant
cooling 13
Ethernet connection 13
NIC 13
Redundant
Ethernet capabilities 17
hot-swap power supplies 17
reliability, server 17
remote battery, RAID adapter
removing 198
replacing 199
remote presence feature
using 57
removing
a riser-card assembly 180
adapter 185, 188, 189
air baffle 148
an optical drive 163
battery, system 241
components 131
removing *(continued)*
dedicated slotless RAID controller 183
DIMM 166
EIA 206
fan cage assembly 172
front USB assembly 152
heat sink 258
heat-sink retention module 274
hot-swap ac power supply 228
hot-swap drive backplane 232, 235
hot-swap fan 174
hot-swap hard disk drive 154
LCD system information display panel 245
media cage 176
memory module 166
microprocessor 258
operator information panel 254
optical drive cable 160
power paddle module 150
RAID adapter remote battery 198
rear two hard-disk-drive kit 200
security bezel 257
simple-swap drive backplate assembly 232, 235
simple-swap hard disk drives 157
system board 276
top cover 146
USB hypervisor flash device 239
Replaceable server components 121
replacing
adapter 190, 195
rear two hard-disk-drive kit 197
air baffle 149
battery, system 243
components 131
dedicated slotless RAID controller 184
DIMM 170
EIA 216
fan cage assembly 173
front USB assembly 152
heat sink 264
heat-sink retention module 275
hot-swap ac power supply 229
hot-swap drive backplane 233
hot-swap fan 175
hot-swap hard disk drive 155
LCD system information display panel 248
microprocessor 264
operator information panel 255
Optical drive 164
optical drive cable 161
power paddle module 151
RAID adapter remote battery 199
rear two hard-disk-drive kit 202
riser-card assembly 181
security bezel 257
server components 145
simple-swap drive backplate assembly 237
simple-swap hard disk drives 158
structural parts 145
system board 279
Tier 1 CRUs 148
replacing *(continued)*
Tier 2 CRUs 258
top cover 147
USB hypervisor flash device 240
returning
component 131
device 131
riser-card assembly
LEDs 35
removing 180
replacing 181
riser-card assembly 181
routing
the configuration cable 133, 135, 138, 142, 144
the hardware RAID cable 133, 135, 138, 142, 144
the power cable 133, 135, 138, 142, 144
RTMM heartbeat
LED 80
Russia Class A electronic emission statement 984

# S

safety vii
Safety Information 7
safety statements vii, ix
security bezel
removing 257
replacing 257
security bezel, removing 257
security bezel, replacing 257
sending diagnostic data to IBM 303, 974
serial number 1
location 116
serial port problems 109
server
offerings 13
power features 40
turning off 40
turning on 40
server , backup firmware
starting 55
server components 27, 121
server configuration
updating 302
server controls, LEDs, and power 18
server firmware, recovering 117
server shutdown 40
ServeRAID support 13
ServerGuide 13
features 47
NOS installation 47
setup 47
Setup and Installation CD 43
using 46
ServerGuide CD 1
service and support
before you call 973
hardware 975
software 975
service bulletins 74
serviceability, server 17
Setup utility 43, 44
menu choices 49

Setup utility *(continued)*
starting 48
using 48
shutting down the server 40
simple-swap drive backplate assembly
hot-swap drive backplane
replacing 237
removing 232, 235
replacing 237
hot-swap drive backplane 237
simple-swap hard disk drives
removing 157
replacing 158
size 8
slot connectors
PCI riser-card 33
SMP 13
software
requirements 5
software problems 110
software service and support telephone numbers 975
specifications 8
starting
Setup utility 48
the backup firmware 55
statements and notices 7
static-sensitive devices
handling 285
structural parts 128
support web page, custom 975
switches
system board 30
symmetric multiprocessing 13
system
error LED front 21
locator LED, front 21
System
information LED 21
system board
buttons 30
external connectors 29
internal connectors 29
jumpers 30
LEDs 33
power-on password switch 53
removing 276
replacing 279
switches 30
system event log 82
system pulse LEDs 80
system reliability guidelines 284
system-event log 81
system-event log, assertion event 81
system-event log, deassertion event 81
systems management 13
systems management tool
IBM Systems Director 16

# T

Taiwan Class A electronic emission statement 985
telecommunication regulatory statement 980
telephone numbers 975
test log, viewing 87
thermal grease 273
tools, call home 87
tools, diagnostic 76
top cover
removing 146
replacing 147
trademarks 978
troubleshooting 71
symptom 88
turning off the server 40
turning on the server 40

# U

UEFI
boot recovery jumper 117
undetermined problems 115
undocumented problems 73
United States FCC Class A notice 981
Universal Serial Bus (USB) problems 111
UpdateXpress 43, 56
updating
firmware 43
IBM Systems Director 62
server configuration 302
Systems Director, IBM 62
Universal Unique Identifier (UUID) 64, 66
USB
connector 19
USB hypervisor flash device
removing 239
replacing 240
using
embedded hypervisor 60
integrated management module 56
Setup utility 48
the remote presence feature 57
Utility program
IBM Advanced Settings 62
utility, Setup 44
starting 48
using 48

# V

video connector
front 19
viewing event log 82
VMware Hypervisor support 44

# W

Wake on LAN feature 40
weight 8
what the server offers 13
working inside the server
power on 285

# X

X-Architecture technology 13

Part Number: 00AK781

Printed in USA

(1P) P/N: 00AK781