DELL™ OPTIPLEX™ 990

TECHNICAL GUIDEBOOK—

INSIDE THE OPTIPLEX 990

TABLE OF CONTENTS

MINI TOWER COMPUTER (MT) VIEW

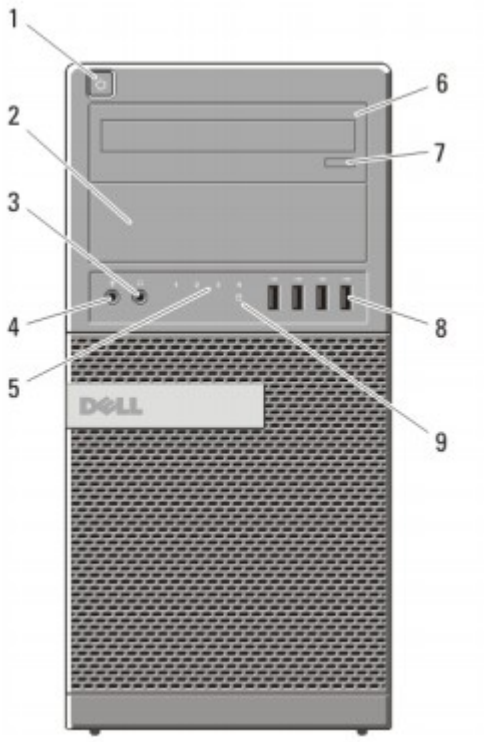

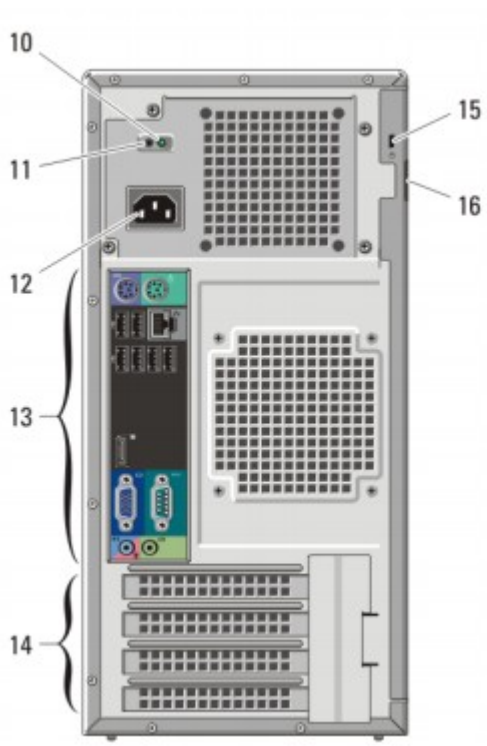

FRONT VIEW			
1	Power Button, Power Light	6	Optical Drive (optional)
2	Optical Drive Bay (optional)	7	Optical Drive Eject Button
3	Headphone Connector	8	USB 2.0 Connectors (4)
4	Microphone Connector	9	Drive Activity Light
5	Diagnostic Lights (4)		

BACK VIEW			
10	Power Supply Diagnostic Light	14	Expansion Card Slots(4)
11	Power Supply Diagnostic Button	15	Security Cable Slot
12	Power Connectors	16	Padlock Ring
13	Back Panel Connectors		

BACK PANEL CONNECTORS			
1	Mouse Connector	7	Keyboard Connector
2	Link Integrity Light	8	USB Connectors (6)
3	Network Connector	9	DisplayPort Connector
4	Network Activity Light	10	VGA Connector
5	Serial Connector	11	Line-in/Microphone Connector
6	Line-out Connector		

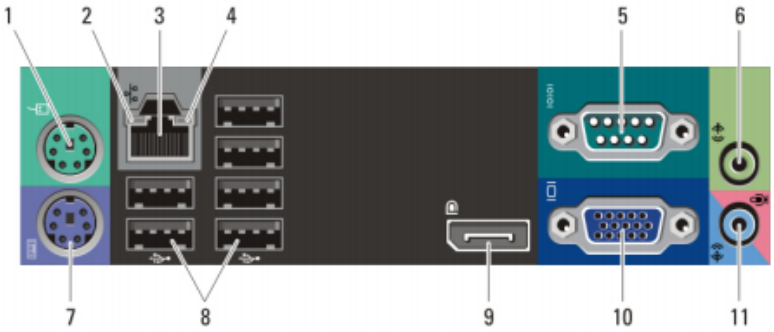

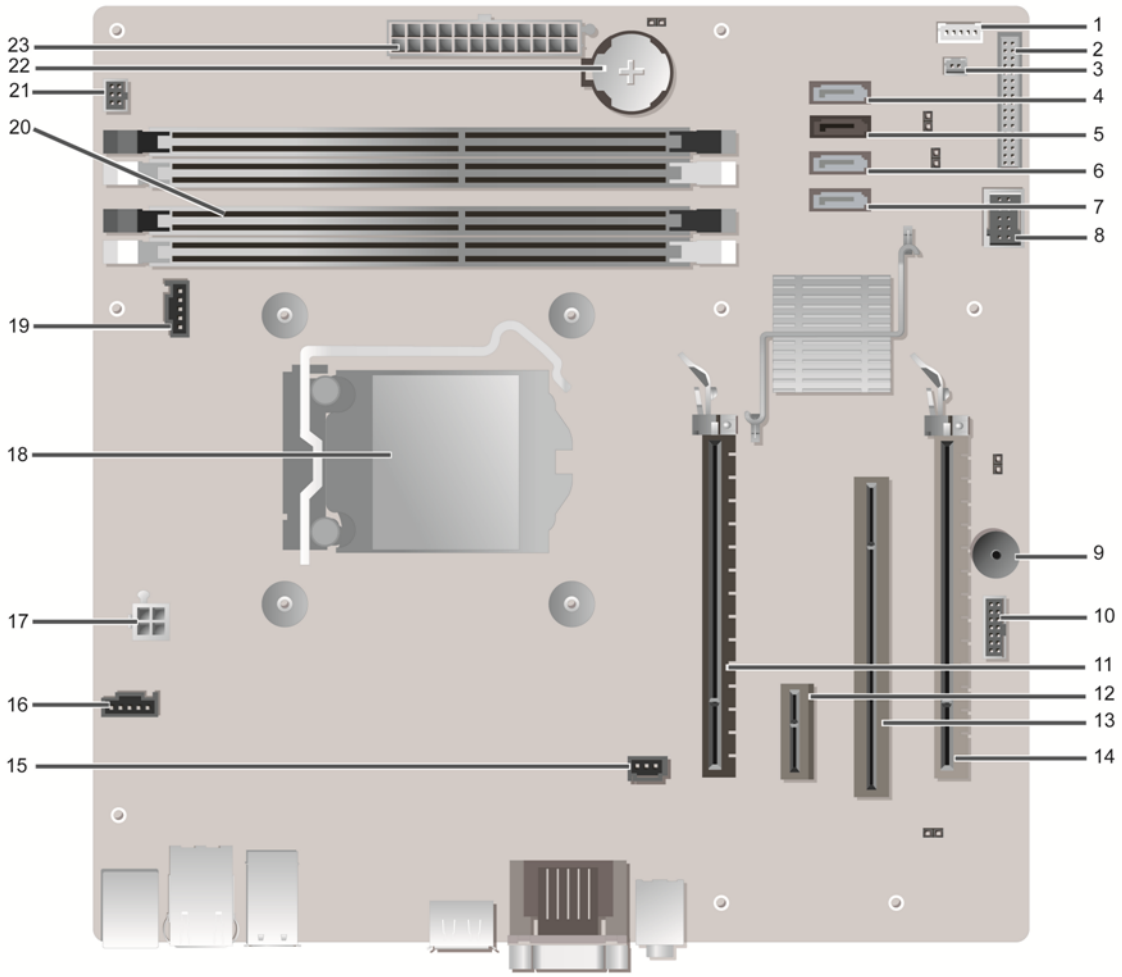

MT System Board Components

Number	Name	Number	Name
1	Internal Speaker Connector (INT_SPKR)	13	PCI Connector(SLOT3)
2	Front IO Connector (FRONTPANEL)	14	PCI-e 4x Connector(SLOT4)
3	Thermal Sensor Connector(THRM_2)	15	Intrusion Switch Connector (INTRUDER)
4	SATA 0 Connector(SATA0)	16	System Fan Connector (FAN_HDD)
5	SATA 1 Connector(SATA1)	17	P2 Power Connector (12V_PWRCONN)
6	SATA 2 Connector(SATA2)	18	Processor Connector (N/A)
7	SATA 3 Connector(SATA3)	19	CPU fan Connector (FAN_CPU)
8	Internal USB Connector (INT_USB)	20	Memory Connectors(DIMM1, DIMM2, DIMM3, DIMM4)
9	Buzzer (BEEP)	21	Power Switch Connector (PWR_SW)
10	LPC Debug Connector (LPC_DEBUG)	22	Battery Connector (BATTERY)
11	PCI-e 16x Connector(SLOT1)	23	P1 Power Connector (POWER)
12	PCI-e 1x Connector(SLOT2)		

DESKTOP COMPUTER (DT) VIEW

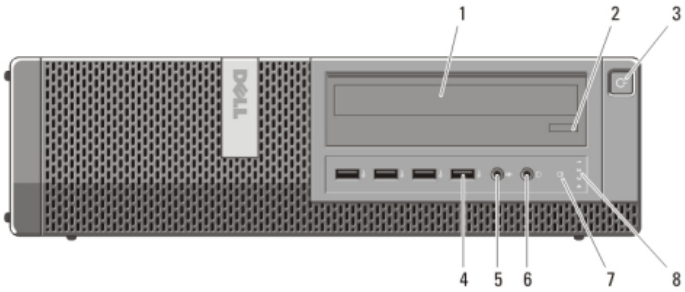

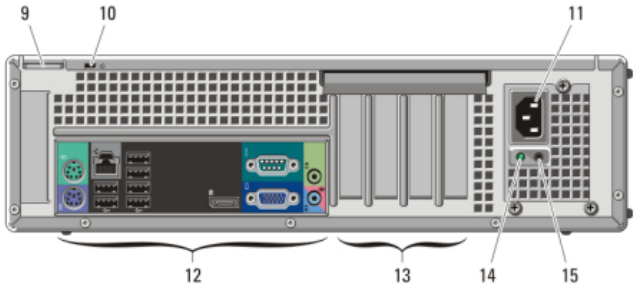

FRONT VIEW			
1	Optical Drive	5	Microphone Connector
2	Optical Drive Eject Button	6	Headphone Connector
3	Power Button, Power Light	7	Drive Activity Light
4	USB Connectors (4)	8	Diagnostic Lights (4)

BACK VIEW			
9	Padlock Ring	13	Expansion Card Slots(4)
10	Security Cable Slot	14	Power Supply Diagnostic Light
11	Power Connectors	15	Power Supply Diagnostic Button
12	Back Panel Connectors		

BACK PANEL CONNECTORS			
1	Mouse Connector	7	Keyboard Connector
2	Link Integrity Light	8	USB Connectors (6)
3	Network Connector	9	DisplayPort Connector
4	Network Activity Light	10	VGA Connector
5	Serial Connector	11	Line-in/Microphone Connector
6	Line-out Connector		

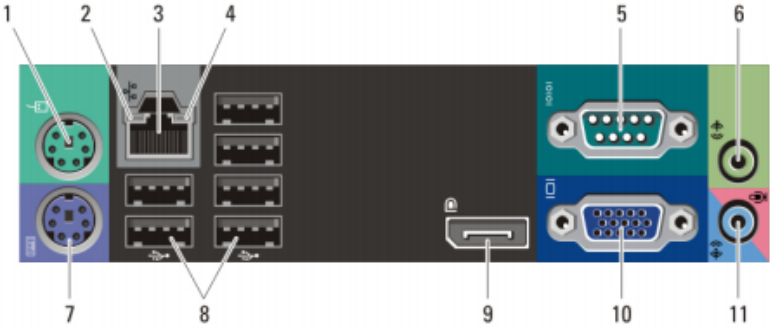

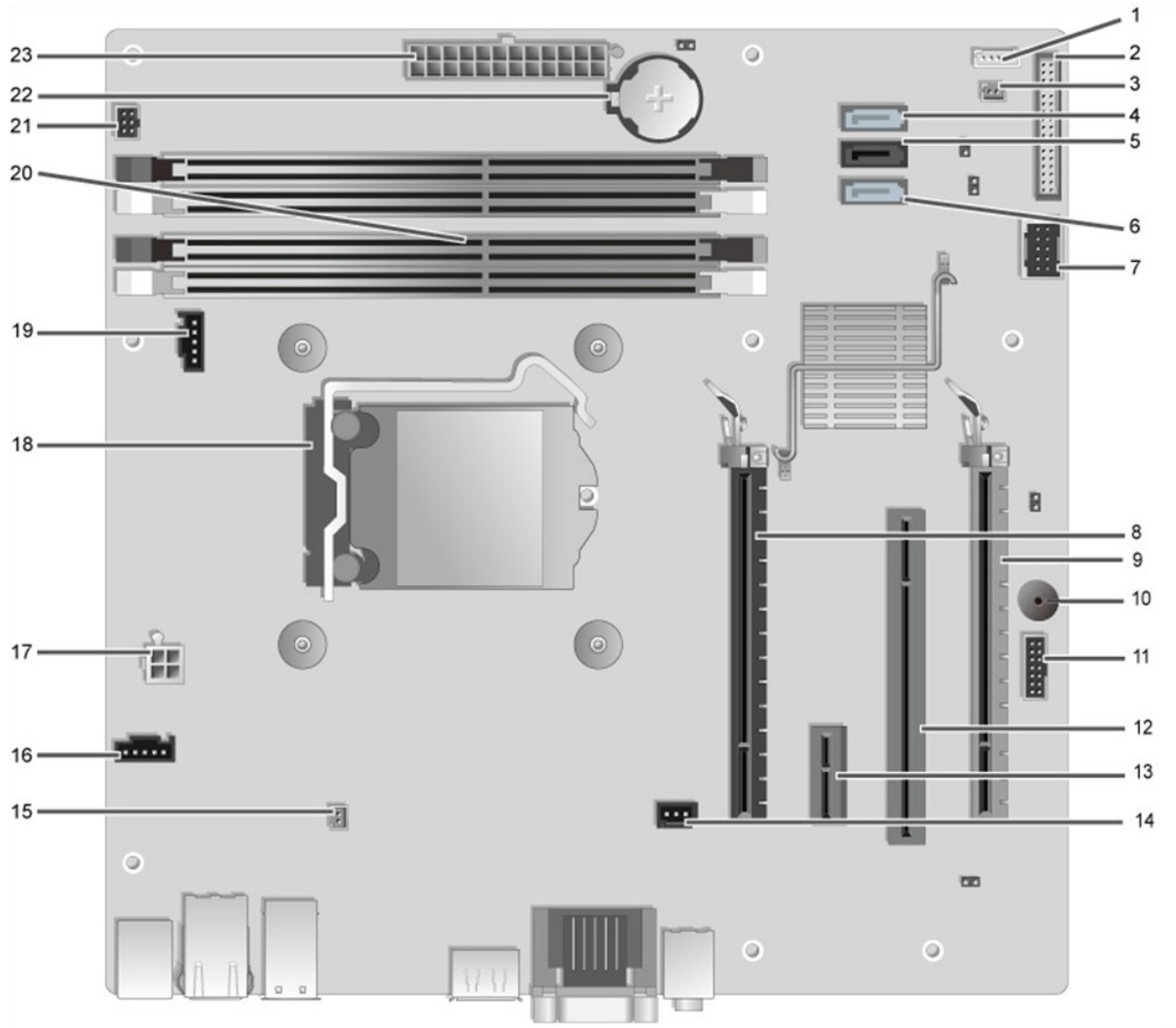

DT System Board Components

Number	Name	Number	Name
1	Internal Speaker Connector (INT_SPKR)	13	PCI-e 1x Connector(SLOT2)
2	Front IO Connector (FRONTPANEL)	14	Intrusion Switch Connector (INTRUDER)
3	Thermal Sensor Connector(THRM_2)	15	Thermal Sensor Connector(THRM_1)
4	SATA 0 Connector(SATA0)	16	System Fan Connector (FAN_HDD)
5	SATA 1 Connector(SATA1)	17	P2 Power Connector (12V_PWRCONN)
6	SATA 2 Connector(SATA2)	18	Processor Connector (N/A)
7	Internal USB Connector (INT_USB)	19	CPU Fan Connector (FAN_CPU)
8	PCI-e 16x Connector(SLOT1)	20	Memory Connectors(DIMM1, DIMM2, DIMM3, DIMM4)
9	PCI-e 4x Connector(SLOT4)	21	Power Switch Connector (PWR_SW)
10	Buzzer (BEEP)	22	Battery Connector (BATTERY)
11	LPC Debug Connector (LPC_DEBUG)	23	P1 Power Connector (POWER)
12	PCI Connector(SLOT3)		

SMALL FORM FACTOR COMPUTER (SFF) VIEW

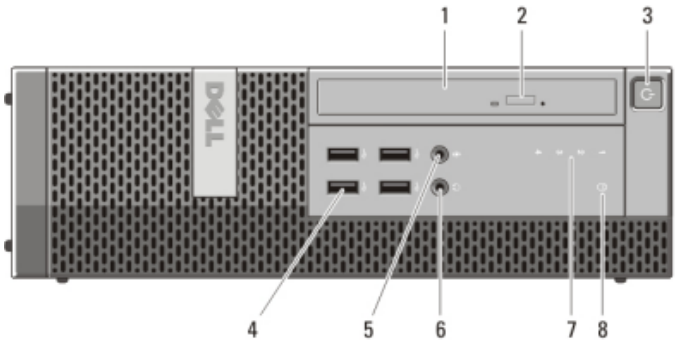

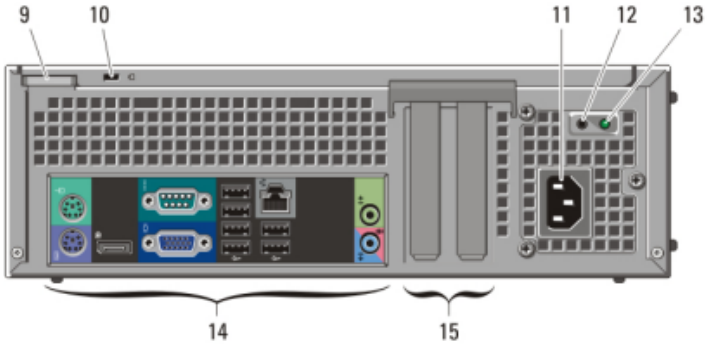

FRONT VIEW			
1	Optical Drive	5	Microphone Connector
2	Optical Drive Eject Button	6	Headphone Connector
3	Power Button, Power Light	7	Diagnostic Lights (4)
4	USB 2.0 Connectors (2)	8	Drive Activity Light

BACK VIEW			
9	Padlock Ring	13	Power Supply Diagnostic Light
10	Security Cable Slot	14	Back Panel Connectors
11	Power Connectors	15	Expansion Card Slots(2)
12	Power Supply Diagnostic Button		

BACK PANEL CONNECTORS			
1	Mouse Connector	7	Keyboard Connector
2	Serial Connector	8	DisplayPort Connector
3	Link Integrity Light	9	VGA Connector
4	Network Connector	10	USB Connectors (6)
5	Network Activity Light	11	Line-in/Microphone Connector
6	Line-out Connector		

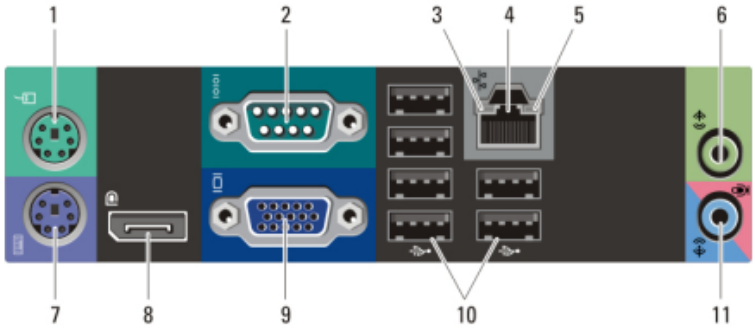

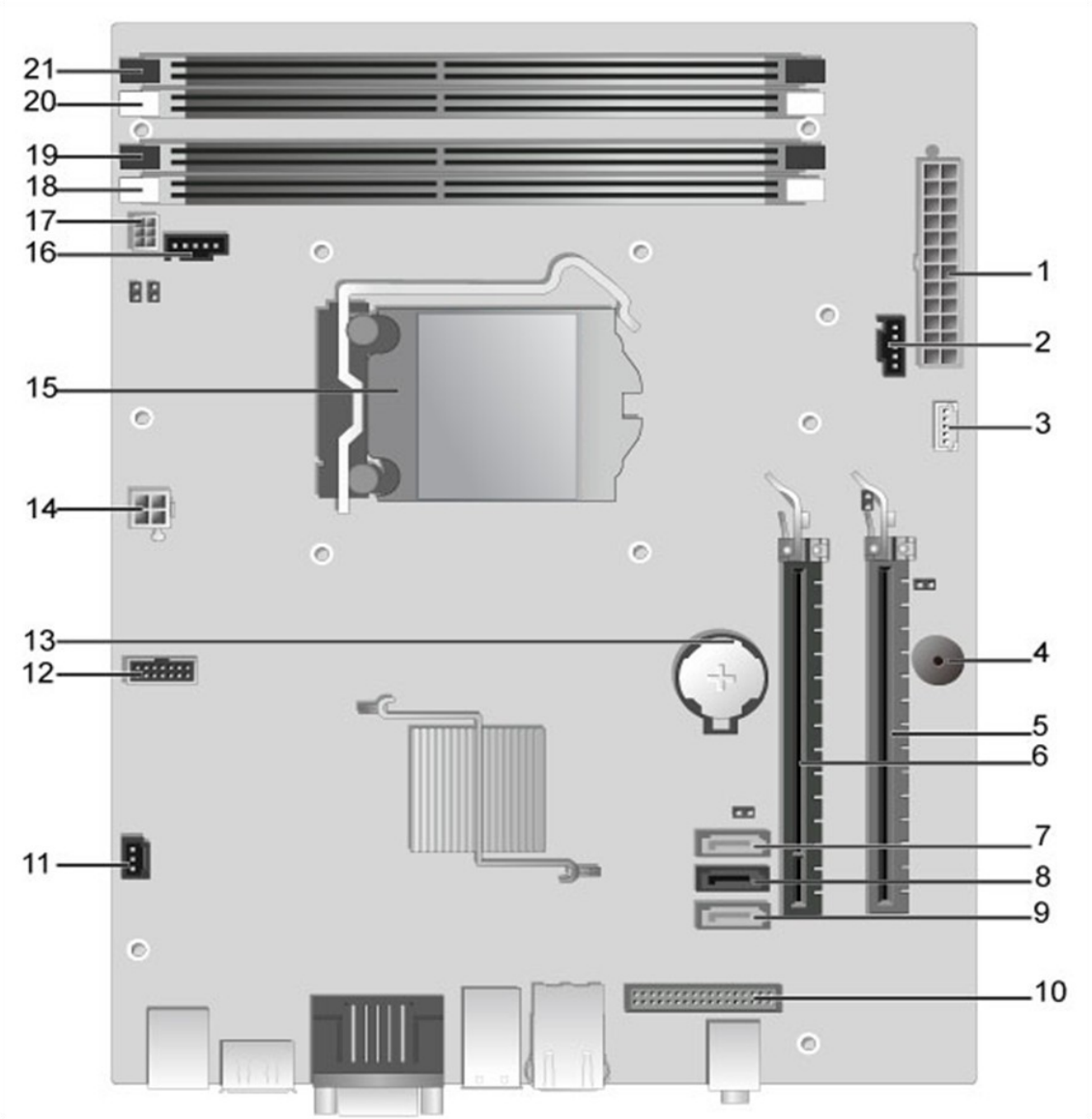

SFF System Board Components

Number	Name	Number	Name
1	P1 power Connector (POWER)	12	LPC debug Connector (LPC_DEBUG)
2	System fan Connector (FAN_HDD)	13	Battery Connector (BATTERY)
3	Internal Speaker Connector (INT_SPKR)	14	P2 Power Connector (12V_PWRCONN)
4	Buzzer (BEEP)	15	Processor Connector (N/A)
5	PCI-e 4x Connector(SLOT2)	16	CPU Fan Connector (FAN_CPU)
6	PCI-e 16x Connector(SLOT1)	17	Power Switch Connector (PWR_SW)
7	SATA 2 Connector(SATA2)	18	Memory Connector(DIMM3)
8	SATA 1 Connector(SATA1)	19	Memory Connector(DIMM1)
9	SATA 0 Connector(SATA0)	20	Memory Connector(DIMM4)
10	Front IO Connector (FRONTPANEL)	21	Memory Connector(DIMM2)
11	Intrusion Switch Connector (INTRUDER)		

ULTRA SMALL FORM FACTOR COMPUTER (USFF) VIEW

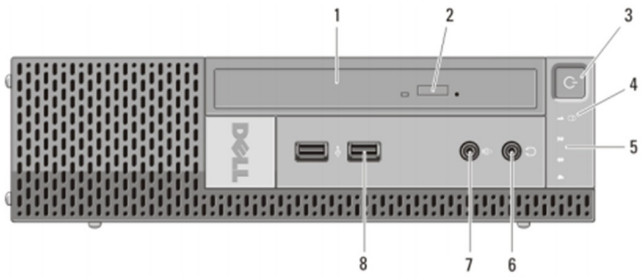

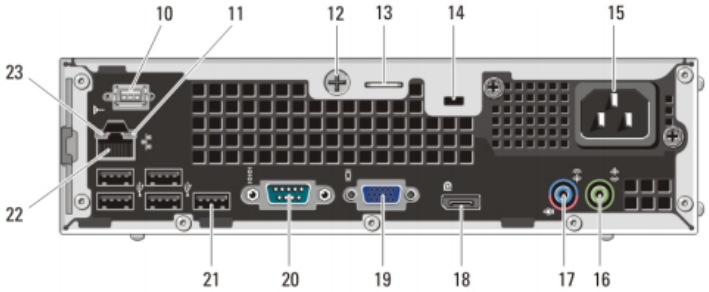

FRONT VIEW			
1	Optical Drive	6	Headphone Connector
2	Optical Drive Eject Button	7	Microphone Connector
3	Power Button, Power Light	8	USB Connectors (2)
4	Drive Activity Light		
5	Diagnostic Lights (4)		

BACK VIEW			
10	Wi-Fi Antenna (optional)	17	Line-in/ Microphone Connector
11	Network Activity Light	18	DisplayPort Connector
12	Captive Thumbscrew	19	VGA Connector
13	Padlock Ring	20	Serial Connector
14	Security Cable Slot	21	USB Connectors (5)
15	Power Connector	22	Network Connector
16	Line-Out Connector	23	Link Integrity Light

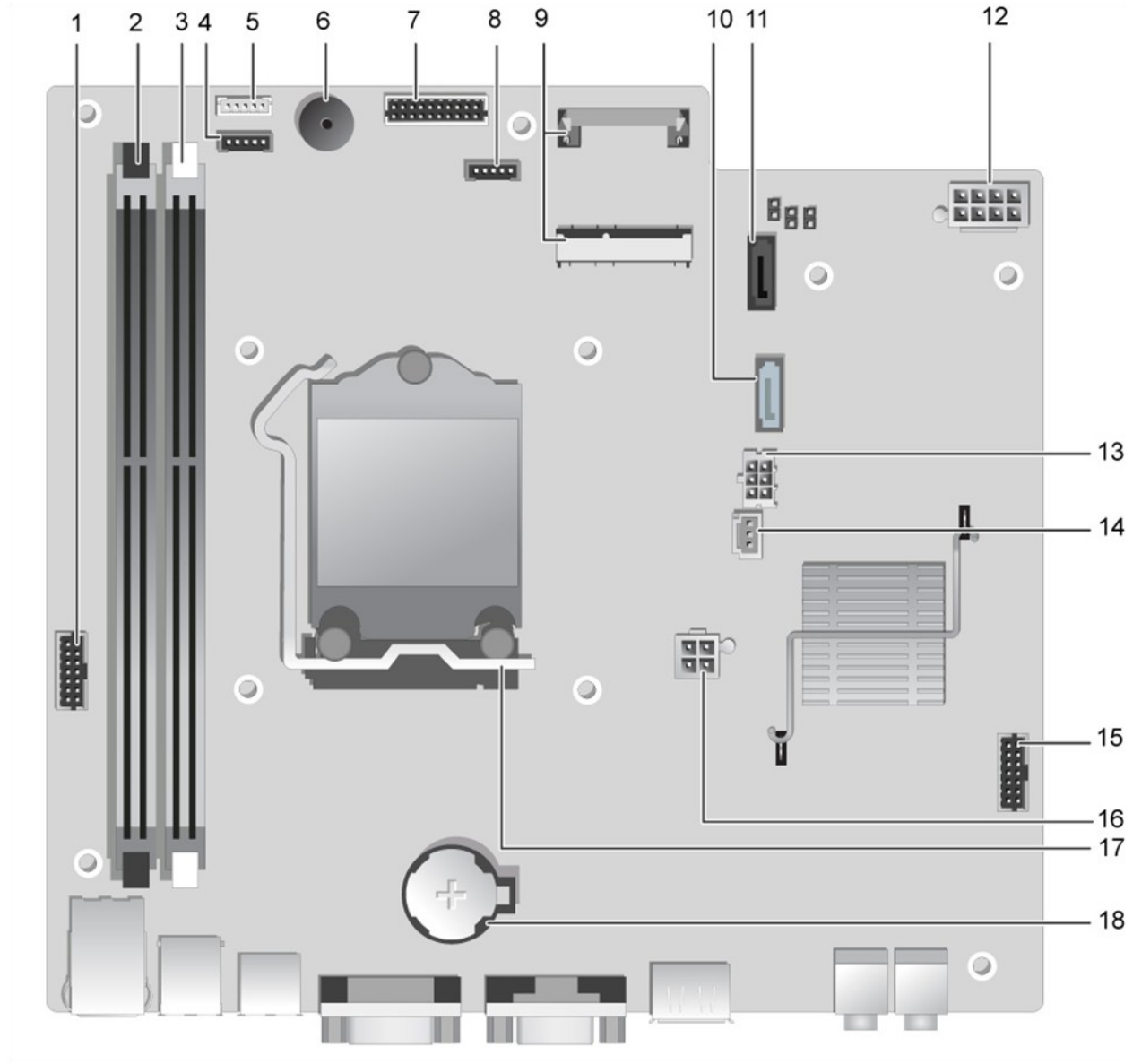

USFF System Board Components

Number	Name	Number	Name
1	Front Panel Connector (FRONTPANEL)	10	SATA 1 Connector(SATA_1)
2	Memory Connector(DIMM_2)	11	SATA 0 Connector(SATA_0)
3	Memory Connector(DIMM_1)	12	P1 Power Connector(POWER1)
4	CPU Fan Connector (FAN_CPU)	13	HDD-ODD Power Connector (HDD_ODD_POWER)
5	Internal Speaker Connector (INT_SPKR)	14	Intrusion Switch Connector (INTRUDER)
6	Buzzer (BEEP)	15	LPC Debug Connector (LPC_DEBUG)
7	Front IO Connector (F_USB_AUDIO)	16	P2 Power Connector(12V_PWRCONN)
8	System Fan Connector (FAN_HDD)	17	Processor Connector (N/A)
9	Mini-PCI Socket (PCIE_MINICARD)	18	Battery Connector (BATTERY)

MARKETING SYSTEM CONFIGURATIONS

NOTE: Offerings may vary by country. For more information regarding the configuration of your computer, click Start>Help and Support and select the option to view information about your computer.

OPERATING SYSTEM

	MT	DT	SFF	USFF
Windows 7® operating system	Microsoft® Windows 7® Home Basic (32 and 64 bit), Microsoft® Windows 7® Home Basic SP1 (32 and 64 bit), Microsoft® Windows 7® Home Premium (32 and 64 bit), Microsoft® Windows 7® Professional (32 and 64 bit), Microsoft® Windows 7® Ultimate (32 and 64 bit),			
Windows Vista® operating system	Windows Vista® Home Basic SP2 (32 bits), Windows Vista® Business SP2 (32 and 64 bit), Windows Vista® Ultimate SP2 (32 bit)			
Windows XP® operating system	Basic Driver support only via Dell.com			
Other	FreeDOS for (N-series), Ubuntu® Linux version 10.10 (China only)			
OS Media Support (optional)	X	X	X	X

CHIPSET

	MT	DT	SFF	USFF
Chipset	Intel Q67 Express Chipset			
Non-volatile memory on chipset				
BIOS Configuration SPI (Serial Peripheral Interface)	64Mbit (8MB) &16Mbit(2MB) located at SPI_FLASH on chipset			
TPM 1.2 Security Device (Trusted Platform Module)[1]	18KB located at TPM1.2 on chipset			
Non-TPM	Available in select countries			
NIC EEPROM	LOM configuration contained within SPI_FLASH – no dedicated LOM EEPROM			

PROCESSOR

NOTE: Global Standard Products (GSP) are a subset of Dell's relationship products that are managed for availability and synchronized transitions on a worldwide basis. They ensure the same platform is available for purchase globally. This allows customers to reduce the number of configurations managed on a worldwide basis, thereby reducing their costs. They also enable companies to implement global IT standards by locking in specific product configurations worldwide. The following GSP processors identified below will be made available to Dell customers.

NOTE: Processor numbers are not a measure of performance. Processor availability subject to change and may vary by region/country.

	MT	DT	SFF	USFF
Intel® Quad Core Processors				
Intel® Core™ i7 2600 / 3.40GHz, 8M, VT-x, VT-d, TXT (vPro™), 95W	X-GSP	X-GSP	X-GSP	
Intel® Core™ i7 2600S / 2.80GHz, 8M, VT-x, VT-d, TXT (vPro™), 65W				X-GSP
Intel® Core™ i5 2500 / 3.30GHz, 6M, VT-x, VT-d, TXT (vPro™), 95W	X-GSP	X-GSP	X-GSP	
Intel® Core™ i5 2500S / 2.70GHz, 6M, VT-x, VT-d, TXT (vPro™), 65W				X-GSP
Intel® Core™ i5 2400 / 3.10GHz, 6M, VT-x, VT-d, TXT (vPro™), 95W	X-GSP	X-GSP	X-GSP	
Intel® Core™ i5 2400S / 2.50GHz, 6M, VT-x, VT-d, TXT (vPro™), 65W				X-GSP
Intel® Dual Core Processors				
Intel® Core™ i3 2120 / 3.30GHz, 3M, VT-x, 65W	X	X	X	X
Intel® Core™ i3 2100 / 3.10GHz, 3M, VT-x, 65W	X	X	X	X

MEMORY

NOTE: Memory modules should be installed in pairs of matched memory size, speed, and technology. If the memory modules are not installed in matched pairs, the computer will continue to operate, but with a slight reduction in performance. The entire 16GB memory range is available to 64-bit operating systems.

	MT	DT	SFF	USFF
Type: DDR3 Synch DRAM Non-ECC Memory	1333MHz			
DIMM Slots	4	4	4	2
DIMM Capacities	Up to 4GB	Up to 4GB	Up to 4GB	Up to 4GB
Minimum Memory	1GB	1GB	1GB	1GB
Maximum System Memory	16GB[1]	16GB[1]	16GB[1]	8GB[1]
Memory configurations				
16GB[1] DDR3, 1333MHz, (4 DIMM)	X	X	X	
8GB[1] DDR3, 1333MHz, (2 DIMM)	X	X	X	X
4GB[1] DDR3, 1333MHz, (2 DIMM)	X	X	X	
4GB[1] DDR3, 1333MHz, (1 DIMM)				X
3GB DDR3, 1333MHz, (2 DIMM)	X	X	X	X
2GB DDR3, 1333MHz, (2 DIMM)	X	X	X	
2GB DDR3, 1333MHz, (1 DIMM)				X
1GB DDR3, 1333MHz, (1 DIMM)	X	X	X	X

[1]The total amount of available memory will be less than 4GB. The amount less depends on the actual system configuration. To fully utilize 4GB or more of memory requires a 64-bit enabled processor and 64-bit operating system.

DRIVES AND REMOVABLE STORAGE

	MT	DT	SFF	USFF
Bays:				
5.25-inch Optical Bay Supported (External)	2	1	1	1
Optical Drives Supported (maximum)	2	1	1 (slim-line)	1 (slim-line)
Hard Drive Bay Supported (Internal)	2	1	1	1
Hard Drives Supported 3.5"/2.5" (maximum)	2/2	1/2	1/2	0/1
Interface:				
SATA 2.0	2	1	1	0
SATA 3.0	2	2	2	2
3.5" Hard Drives:				
1TB[1] SATA 7200 RPM HDD	X	X	X	
500GB[1] SATA 7200 RPM HDD	X	X	X	
320GB[1] SATA 7200 RPM HDD	X	X	X	
250GB[1] SATA 7200 RPM HDD	X	X	X	
2.5" Hard Drives: (Hybrid drive includes 4GB NAND Flash for greater performance)				
128GB[1] SATA Solid State Drive	X	X	X	X
500GB[1] SATA 7200 RPM Hybrid HDD	X	X	X	X
320GB[1] SATA 7200 RPM Opal SED HDD	X	X	X	X
500GB[1] SATA 7200 RPM HDD	X	X	X	X
250GB[1] SATA 7200 RPM HDD	X	X	X	X
RAID 1 Data Protection: (includes two matching capacity/speed hard drives)				
1TB[1] SATA 7200 RPM HDD (3.5")	X			
500GB[1] SATA 7200 RPM HDD (3.5")	X			
320GB[1] SATA 7200 RPM HDD (3.5")	X			
250GB[1] SATA 7200 RPM HDD (3.5")	X			
500GB[1] SATA 7200 RPM Hybrid HDD (2.5")	X	X	X	
500GB[1] SATA 7200 RPM HDD (2.5")	X	X	X	
250GB[1] SATA 7200 RPM HDD (2.5")	X	X	X	

DRIVES AND REMOVABLE STORAGE

	MT	DT	SFF	USFF
RAID 0 Performance: (includes two matching capacity/speed hard drives)				
1TB[1] SATA 7200 RPM HDD (3.5")	X			
500GB[1] SATA 7200 RPM HDD (3.5")	X			
320GB[1] SATA 7200 RPM HDD (3.5")	X			
250GB[1] SATA 7200 RPM HDD (3.5")	X			
500GB[1] SATA 7200 RPM Hybrid HDD (2.5")	X	X	X	
500GB[1] SATA 7200 RPM HDD (2.5")	X	X	X	
250GB[1] SATA 7200 RPM HDD (2.5")	X	X	X	
Optical Drive: (SFF/USFF require slim-line optical drive)				
Blu-ray Writer SATA 1.5Gbit/s	X	X	X	X
DVD+/-RW[2] SATA 1.5Gbit/s	X	X	X	X
DVD-ROM[3] SATA 1.5Gbit/s	X	X	X	X
Media Card Reader: (requires slim line optical)				
Dell 19 in 1 Media Card Reader	X	X		

NOTE: Dell 19 in 1 Media Card Reader (MCR) is supported via a F5 to F3 bay converter on the MT and DT and may require a slim line optical drive depending on selectable configuration. MCR is not available on the SFF and USFF.

SYSTEM BOARD CONNECTORS

NOTE: See Detailed Engineering Specifications for maximum card dimensions.

	MT	DT	SFF	USFF
PCI Slot	1	1		
PCIe x16 Slot	1	1	1	
PCIe x16 (wired x4) Slot	1	1	1	
PCIe x1 Slot	1	1		
Half mini-PCIe connector				1
Serial ATA (SATA) connectors	4	3	3	2

[1] For hard drives, GB means 1 billion bytes; actual capacity varies with preloaded material and operating environment and will be less.
[2] Discs burned with this drive may not be compatible with some existing drives and players; using DVD+R media provides maximum compatibility.
[3] DVD-ROM drives may have write-capable hardware that has been disabled via firmware modifications.

GRAPHICS/VIDEO CONTROLLER

NOTE: MT supports full height (FH) cards and DT and SFF supports low profile (LP) cards.

	MT	DT	SFF	USFF
Intel HD Graphics [with Celeron/Pentium class CPU-GPU combo] Intel HD Graphics 2000[with iCore Dual/Quad core class CPU-GPU combo]	Integrated on CPU			
Enhanced Graphic/Video Options				
1GB AMD RADEON HD 6670 with DP, DVI and VGA	Optional card			
1GB AMD RADEON HD 6450 with DP and DVI	Optional card			
512MB AMD RADEON HD 6350 with dual DVI or dual VGA (adapters convert DMS-59 connector to dual DVI or dual VGA)	Optional card			

EXTERNAL PORTS/CONNECTORS

NOTE: MT supports full height (FH) cards and DT and SFF supports low profile (LP) cards. See chassis diagrams section for port/connector locations

	MT	DT	SFF	USFF
USB 2.0 (1 internal on MT and DT)	4 Front, 6 Rear			2 Front, 5 Rear
Serial	1 Rear			
Parallel/2nd Serial via optional PCIex1 card	Optional FH card			
2nd Serial via optional PCIex1 card		Optional LP card		
Network Connector (RJ-45)	1 Rear			
PS/2	2 Rear			
1394 Controller via optional PCI card	Optional FH card	Optional LP card		
USB 3.0 via optional PCIex1 card	Optional FH card	Optional LP card		
Video:				
VGA	1 Rear			
DisplayPort (1.1a)	1 Rear			
Audio:				
Line in for microphone	1 Front			
Line in for microphone or stereo	1 Rear			
Line out for headphones or speakers	1 Front, 1 Rear			

COMMUNICATIONS - NETWORK ADAPTER (NIC)

NOTE: MT supports full height (FH) cards and DT and SFF supports low profile (LP) cards.

	MT	DT	SFF	USFF
Intel® 82579LM Gigabit[1] Ethernet LAN 10/100/1000 (Remote Wake Up, PXE support and Intel Active Management Technology support)	Integrated on system board			
Broadcom NetXtreme 10/100/1000 PCIe Gigabit Networking Card	Optional card			

[1] This term does not connote an actual operating speed of 1 Gb/sec. For high speed transmission, connection to a Gigabit Ethernet server and network infrastructure is required.

COMMUNICATIONS – WIRELESS

NOTE: MT supports full height (FH) cards and DT and SFF supports low profile (LP) cards.

	MT	DT	SFF	USFF
Dell Wireless 1520 PCIe WLAN card (802.11n)	Optional card			
Dell Wireless 1520 half mini-PCIe WLAN card (802.11n)				Optional

AUDIO AND SPEAKERS

	MT	DT	SFF	USFF
Realtek ALC269Q High Definition Audio Codec	Integrated on system board			
Internal Dell Business Audio Speaker	Optional			
Dell AX210 2.0 Desktop Speakers	Optional			
Dell AX510/AX510PA Flat Panel Soundbar Speakers	Optional			

KEYBOARD AND MOUSE

	MT	DT	SFF	USFF
Dell USB Entry Keyboard with optional palmrest	Optional			
Dell Multimedia Pro Keyboard	Optional			
Dell Smartcard Keyboard	Optional			
Dell USB Optical Mouse	Optional			
Dell Laser Mouse	Optional			

SECURITY

	MT	DT	SFF	USFF
Trusted Platform Module (TPM) 1.2[1]	Integrated on system board			
Chassis Intrusion Switch	Optional			
Dell Smartcard Keyboard	Optional			
Chassis lock slot and loop support	Standard			

[1]TPM is not available in all countries. Depending on your country regulations, no-TPM system boards may be available.

SERVICE AND SUPPORT

NOTE: For more details on Dell Service Plans please to go to: www.dell.com/service/service_plans

	MT	DT	SFF	USFF
3 Year Warranty[1] Next Business Day On-site[2] (3-3-3)	Standard			
ProSupport	Optional			

[1] For a copy of our guarantees or limited warranties, please write Dell USA L.P., Attn: Warranties, One Dell Way, Round Rock, TX 78682. For more information, visit www.dell.com/warranty.

[2] Service may be provided by third-party. Technician will be dispatched if necessary following phone-based troubleshooting. Subject to parts availability, geographical restrictions and terms of service contract. Service timing dependent upon time of day call placed to Dell. U.S. only.

SOFTWARE

	MT	DT	SFF	USFF
Dell Client Manager	Available via Dell.com			
Dell Data Protection/Access (DDPA)	Standard			

DETAILED ENGINEERING SPECIFICATIONS

SYSTEM DIMENSIONS (PHYSICAL)

NOTE: System Weight and Shipping Weight is based on a typical configuration and may vary based on PC configuration. A typical configuration includes: integrated graphics, one hard drive, one optical drive.

	MT	DT	SFF	USFF
Chassis Volume (liters)	26.27	15.06	8.38	3.70
Chassis Weight (pounds/kilograms)	19.55 / 8.87	16.67 / 7.56	12.57 / 5.70	7.20 / 3.265
Chassis Dimensions: (HxWxD)				
Height (inches/centimeters)	14.17 / 36	14.17 / 36	11.42 / 29	9.32 / 23.67
Width (inches/centimeters)	6.89 / 17.5	4.02 / 10.2	3.65 / 9.26	2.56 / 6.5
Depth (inches/centimeters)	16.42 / 41.7	16.14 / 41	12.28/31.2	9.44 / 24
Shipping Weight (pounds/kilograms - includes packaging materials)	23.45 / 10.64	20.03 / 9.09	15.2 / 6.89	9.56/ 4.34
Packaging Parameters (HxWxD)				
Height (inches/centimeters)	21.31/54.13	21.31 / 54.13	19.25/48.90	19.13/48.59
Width (inches/centimeters)	18.75/47.63	18.75/47.63	15.81/40.16	14.38/36.53
Depth (inches/centimeters)	14.09 / 35.79	10.84/27.53	10.19/25.88	9.63/24.46

SYSTEM BOARD CONNECTOR MAXIMUM ALLOWABLE DIMENSIONS

	MT	DT	SFF	USFF
PCI Slots	1	1		
Height (inches/centimeters)	4.376 / 11.115	2.731 /6.89		
Length (inches/centimeters)	7.4 / 24.13*	6.6/16.765		
PCIex16 Slots (BLUE)	1	1	1	
Height (inches/centimeters)	4.376 / 11.115	2.731 /6.89	2.731 /6.89	
Length (inches/centimeters)	7.4 / 24.13*	6.6 /16.765	6.6/16.765	
PCIex16 wired as x4 (BLACK)	1	1	1	
Height (inches/centimeters)	4.376 / 11.115	2.731 /6.89	2.731 /6.89	
Length (inches/centimeters)	7.4 / 24.13*	6.6 /16.765	6.6/16.765	
PCIe x1 Slots	1	1		
Height (inches/centimeters)	4.376 / 11.115	2.731 / 6.89		
Length (inches/centimeters)	7.4 / 24.13*	6.6 /16.765		
Mini PCIe x1 Slots				1

* Card length can be longer than standard Half-Length Card but cannot be a Full-Length Card.

SYSTEM LEVEL ENVIRONMENTAL AND OPERATING CONDITIONS

	MT	DT	SFF	USFF
Temperature				
Operating	10° to 35° C (50° to 95° F)			
Non-Operating (Storage)	-40° to 60° C (-40° to 140° F)			
Relative Humidity	20% to 80% (non-condensing)			
Maximum vibration				
Operating	0.25 G at 3 to 200 Hz at 0.5 octave/min			
Non-Operating	0.5 G at 3 to 200 Hz at 1 octave/min			
Maximum Shock				
Operating	Bottom half-sine pulse with a change in velocity of 50.8 cm/sec (20 inches/sec)			
Non-Operating	27-G faired square wave with a velocity change of 508 cm/sec (200 inches/sec)			
Maximum Altitude				
Operating	–15.2 to 3048 m (–50 to 10,000 ft)			
Non-Operating	–15.2 to 10,668 m (–50 to 35,000 ft)			

POWER

NOTE: These form factors utilize a more efficient Active Power Factor Correction (APFC) power supply. Dell recommends only Universal Power Supplies (UPS) based on Sine Wave output for APFC PSUs, not an approximation of a Sine Wave, Square Wave, or quasi-Square Wave. If you have questions, please contact the manufacture to confirm the output type.

	MT		DT		SFF		USFF
	APFC	EPA	APFC	EPA	APFC	EPA	EPA
Power Supply Wattage	265W	265W High Efficiency	250W	250W High Efficiency	240W	240W High Efficiency	200W High Efficiency
AC input Voltage Range	90 – 264Vac	90 – 264Vac	90 – 264Vac	90 – 264Vac	90 – 264Vac	90 – 264Vac	90 – 264Vac
AC input current (low ac range/high AC range)	5.0A / 2.5A	5.0A / 2.5A	4.4A / 2.2A	4.4A / 2.2A	4.0A / 2.0A	4.0A / 2.0A	2.9A / 1.45A
AC input Frequency	47HZ/63HZ	47HZ/63HZ	47HZ/63HZ	47HZ/63HZ	47HZ/63HZ	47HZ/63HZ	47 – 63 Hz
AC holdup time (80% load)	16MSEC	16MSEC	16MSEC	16MSEC	16MSEC	16MSEC	16 ms
Average Efficiency (Energy Star 5.0 Com-pliant)		87 – 90 – 87% @ 20 – 50 – 100% load		87 – 90 – 87% @ 20 – 50 – 100% load		87 – 90 – 87% @ 20 – 50 – 100% load	87 – 90 – 87% @ 20 – 50 – 100% load
Typical Efficiency (Active PFC)	65%		65%		65%		N/A
DC parameters							
+3.3v output	10.0A	10.0A	7.0 A	7.0 A	3.5A	3.5A	N/A
+5.0v output	13A	13A	15A	15A	11A	11A	N/A
+12.0v output	12VA/17A; 12VB/9A	12VA/17A; 12VB/9A	17.8A	17.8A	17A	17A	+12VA - 12.5 A & +12VB - 6.0 A Note: +12VB Rated at 0.4A when in Standby Mode.
+5.0v auxiliary output	4.0A	4.0A	4.0	4.0	4.0A	4.0A	N/A
-12.0v output	0.5A	0.5A	0.5A	0.5A	0.5A	0.5A	0.1 A
Max total power	265W	265W	255W	255W	235W	235W	200W
Max combined +3.3v / +5.0v power	90W	90W	90W	90W	60W	60W	N/A
Max combined 12.0v power (note: only if more than one 12v rail)	240W	240W	N/A	N/A	N/A	N/A	200W
BTUs/h (based on PSU max wattage)	904 BTU	904 BTU	853 BTU	853 BTU	819 BTU	819 BTU	682 BTU
Power Supply Fan	80*25mm	80*25mm	80*20/25mm	80*20/25mm	60*25mm	60*25mm	N/A
Compliance:							
1watt requirement	Yes	Yes	Yes	Yes	Yes	Yes	Yes
Blue Angel Compliant	Yes	Yes	Yes	Yes	Yes	Yes	Yes
Climate Savers / 80Plus Compliant	No	Yes	No	Yes	No	Yes	Yes
FEMP (CECP) Standby Power Compliant	Yes	Yes	Yes	Yes	Yes	Yes	Yes

POWER

NOTE: These form factors utilize a more efficient Active Power Factor Correction (APFC) power supply. Dell recommends only Universal Power Supplies (UPS) based on Sine Wave output for APFC PSUs, not an approximation of a Sine Wave, Square Wave, or quasi-Square Wave. If you have questions, please contact the manufacture to confirm the output type.

3.0v CMOS battery (Type and estimated battery life)				
Brand	Type	Voltage	Composition	Life
PANASONIC	CR-2302L/ BE	3V	Lithium	Continuous Discharge Under 15 kΩ Load to 2.5V End-Voltage. 20℃±2℃.1183Hrs. or Longer.1133Hrs.or Longer after 12 months.
MITSUBISHI	CR2302	3V	Lithium	Continuous Discharge Under 15 kΩ Load to 2.0V End-Voltage. 20℃±2℃.1000Hrs. or Longer.970Hrs.or Longer after 12 months. 0℃±2℃. 910Hrs. or Longer.890Hrs.or Longer after 12 months.

AUDIO

INTEGRATED REALTEK ALC269Q HIGH DEFINITION AUDIO	MT	DT	SFF	USFF
High Definition Stereo support	X	X	X	X
Number of channels	2			
Number of Bits / Audio resolution	16, 20, and 24-bit resolution			
Sampling rate (recording/playback)	Support 44.1K/48K/96K/192 kHz sample rates			
Signal to Noise Ratio	98 dB DAC outputs, 90 dB for ADC inputs			
Analog Audio	X	X	X	X
Dolby Digital				
THX				
Digital out (S/PDIF)				
Audio Jack Impedance				
Microphone	40K ohm~60K ohm			
Line-In	40K ohm~60K ohm			
Line-Out	100~150 ohm			
Headphone	1~4 ohm			
Internal Speaker Power Rating	2Watt (peak) / 1Watt (average)			

COMMUNICATIONS - NETWORK ADAPTER (NIC)

NOTE: MT supports full height (FH) cards and DT and SFF supports low profile (LP) cards.

INTEGRATED INTEL® 82579 GIGABIT1 ETHERNET LAN 10/100/1000	MT	DT	SFF	USFF
External Connector Type	RJ45			
Data Rates supported	10/100/1000 Mbps			
Controller Details				
Controller bus architecture	PCIe-based interface for S0 state, SMBus for Sx low power state			
Integrated memory	N/A			
Data transfer mode (example Bus-Master DMA)	N/A			
Power consumption (full operation per data rate connection speed)	711mW (Max.)			
Power consumption (standby operation)	227mW (Max.)			
IEEE standards compliance (example 802.1P)	802.3			
Hardware Certifications (example FCC, B, GS mark...)	N/A			
Boot ROM Support	EEPROM (located in SPI)			
Network Transfer Mode (example Full Duplex, Half Duplex)				
Network Transfer Rate (example 10BASE-T (half-duplex) 10 Mbps 10BASE-T (full-duplex) 20 Mbps 100BASE-TX (half-duplex) 100 Mbps 100BASE-TX (full-duplex) 200 Mbps 1000BASE-T (full-duplex) 2000 Mbps	10 Mb (full/half-duplex) 100 Mb (full/half-duplex) 1000 Mb (full-duplex)			

COMMUNICATIONS - NETWORK ADAPTER (NIC) (CONT.)

INTEGRATED INTEL® 82579 GIGABIT1 ETHERNET LAN 10/100/1000 (CONT.)	MT	DT	SFF	USFF
Environmental				
Operating temperature	0° C to 85° C (32° F to 185° F)			
Operating humidity	20% to 80% (non-condensing)			
Operating System Driver Support	Windows 7 32/64, Windows XP 32/64, Vista 32/64			
Manageability (examples WOL, PXE)	WOL, PXE 2.1			
Management Capabilities Alerting	Intel® Standard Manageability, Intel Core 2 Duo/ Quad Processor with vPro Technology			

[1] This term does not connote an actual operating speed of 1 Gb/sec. For high speed transmission, connection to a Gigabit Ethernet server and network infrastructure is required.

COMMUNICATIONS – INTEGRATED LAN

NOTE: MT supports full height (FH) cards and DT and SFF supports low profile (LP) cards.

Broadcom NetXtreme 10/100/1000 PCIe Gigabit[1] Networking Card	MT	DT	SFF	USFF
Connector Type	RJ45			
Data Rates supported	10/100/1000 Mbps Half/Full duplex			
Controller Details				
Controller bus architecture (example PCIe 1.0a x1)	PCIe c1.0a x1			
Integrated memory	64KBytes RX, 8KBytes TX			
Data transfer mode (example Bus-Master DMA)	Bus-Master DMA			
Power consumption (full operation per data rate connection speed)	2.84W (860mA @ +3.3V)			
Power consumption (standby operation)	Less than 300mW			
IEEE standards compliance (example 802.1P)	802.3, 802.2, 802.3x, 802.1p			
Hardware Certifications (example FCC, B, GS mark...)	FCC B, VCCI B, CE			
Boot ROM Support	No			
Network Transfer Mode (example Full Duplex, Half Duplex)				
Network Transfer Rate (example 10BASE-T (half-duplex) 10 Mbps 10BASE-T (full-duplex) 20 Mbps 100BASE-TX (half-duplex) 100 Mbps 100BASE-TX (full-duplex) 200 Mbps 1000BASE-T (full-duplex) 2000 Mbps	10BASE-T (full-duplex) 20 Mbps Max* 100BASE-TX (half-duplex) 100 Mbps Max* 100BASE-TX (full-duplex) 200 MbpsMax* 1000BASE-T (full-duplex) 2000 Mbps Max* * Depends on the system environment.			

[1] This term does not connote an actual operating speed of 1 Gb/sec. For high speed transmission, connection to a Gigabit Ethernet server and network infrastructure is required.

COMMUNICATIONS – INTEGRATED LAN (CONT.)

BROADCOM NETXTREME 10/100/1000 PCIE GIGABIT[1] NETWORKING CARD (CONT.)	MT	DT	SFF	USFF
Environmental				
Operating temperature	0° C to 55° C (32° F - 131° F)			
Operating humidity	5% ~ 85% (non-condensing)			
Operating System Driver Support	Windows® 7, Windows® XP, Windows Vista® Ultimate, Windows Vista® Business 32 bit/64 bit, Windows Vista Home Basic, Linux			
Manageability (examples WOL, PXE)	WOL, PXE2.1, ACPI			
Management Capabilities Alerting (example ASF 2.0)	None			

[1] This term does not connote an actual operating speed of 1 Gb/sec. For high speed transmission, connection to a Gigabit Ethernet server and network infrastructure is required.

COMMUNICATIONS – WIRELESS

DELL WIRELESS 1520 PCIE WLAN CARD (MT, DT, SFF) OR HALF MINI-PCIE WLAN CARD (USFF) 802.11N	MT	DT	SFF	USFF
External Connector Type	Custom WLAN Antenna Connector			
Controller Details				
Controller bus architecture	Electrically compatible with the PCI Express Base Specification v1.1 (x1 lane) and PCIe v1.0a.			
WLAN standards supported	802.11a, 802.11b, 802.11g, 802.11n			
802.11b Data Rates supported	11, 5.5, 2, 1 Mbps			
802.11a Data Rates supported	54, 48, 36, 24, 18, 12, 9, 6 Mbps			
802.11g Data Rates supported	54, 48, 36, 24, 18, 12, 9, 6 Mbps			
802.11n Data Rates supported	300, 270, 243, 240, 180, 150, 144, 135, 130, 120, 117, 115.5, 90, 86.667, 72.2, 65, 60, 57.8, 45, 43.3, 30, 28.9, 21.7, 15, 14.4, 7.2 Mbps			
Encryption	WEP 64-bit and 128-bit, TKIP, AES-CCMP 128-bit			
Operating temperature	0 to +70 °C			
Operating humidity	Max Operating Humidity 85 %			
Operating System Driver Support	Windows 7 32/64, Windows XP 32/64, Vista 32/64			

COMMUNICATIONS – USB 3.0 ADD-IN CARD

NOTE: MT supports full height (FH) cards and DT and SFF supports low profile (LP) cards.

USB 3.0 PORT PCIE ADD-IN CARD	MT	DT	SFF	USFF
Connector Type	PCI Express Gen. 2.0 X1			
Controller Details				
Controller bus architecture (example PCIe 1.0a x1)	PCI Express one lane (x1)			
Chipset	NEC µPD720200			
IO Ports	2 * USB3.0 port			
Power Consumption	Under 30 mA			
Connector	USB 3.0 A Type			
Full height USB3.0 add-in card	Optional			
Half height USB3.0 add-in card		Optional		
OS Support	Win XP, Win Vista and Win 7			

COMMUNICATIONS – SERIAL / PARALLEL PORT PCIE ADD-IN CARD

NOTE: MT supports full height (FH) card.

SERIAL / PARALLEL PORT PCIE ADD-IN CARD	MT	DT	SFF	USFF
Connector Type	RS-232 and IEEE1284			
Data Rates supported	50bps ~115.2Kbps (Serial) &Maximum 1.8MBp(Parallel)			
Controller Details				
Controller bus architecture (example PCIe 1.0a x1)	PCI Express one lane (x1)			
Driver Support	Microsoft Client XP/Vista/7 (X86/X64) Microsoft Server 2000/2003/2008 (X86/X64) Microsoft Embedded XP Embedded/POS Ready 2009/ Embedded System 2009 Linux Linux 2.4.x/2.6.x DOS DOS			
Full height Serial / Parallel add-in card	Optional			
Environment				
Operation Temperature	0 to 60°C (32 to 140°F)			
Operation Humidity	5 to 95% RH			
Storage Temperature	-20 to 85°C (-4 to 185°F)			

COMMUNICATIONS – SERIAL PORT PCIE ADD-IN CARD

NOTE: DT and SFF supports low profile (LP) card.

SERIAL PORT PCIE ADD-IN CARD	MT	DT	SFF	USFF
Connector Type	RS-232			
Data Rates supported	50bps ~115.2Kbps			
Controller Details				
Controller bus architecture (example PCIe 1.0a x1)	PCI Express one lane (x1)			
Driver Support	Microsoft Client XP/Vista/7 (X86/X64) Microsoft Server 2000/2003/2008 (X86/X64) Microsoft Embedded XP Embedded/POS Ready 2009/ Embedded System 2009 Linux Linux 2.4.x/2.6.x DOS DOS			
Half height Serial add-in card		Optional		
Environment				
Operation Temperature	0 to 60°C (32 to 140°F)			
Operation Humidity	5 to 95% RH			
Storage Temperature	-20 to 85°C (-4 to 185°F)			

GRAPHICS/VIDEO CONTROLLER

NOTE: MT supports full height (FH) cards and DT and SFF supports low profile (LP) cards.

Onboard Graphics. 1. Intel HD Graphics [with Celeron/Pentium class CPU-GPU combo] 2. Intel HD Graphics 2000 [with iCore Dual/Quad core class CPU-GPU combo]	**MT**	**DT**	**SFF**	**USFF**
Bus Type	Integrated			
GPU core clock	Gen6 Core Intel® HD Graphics /HD Graphics 2000 @ 850MHz			
Frame Buffer Memory (onboard and shared) Size and Speed	Depends on available system memory (Up to 1.7GB with 4GB system Memory)			
Overlay Planes	Yes			
Maximum Color Depth	32 bit			
Maximum Vertical Refresh Rate	75 Hz			
Multiple Display Support	Yes			
Operating Systems Graphics/ Video API Support	OpenGL 3.0/DirectX 10.1			
Supported Resolutions and Max Refresh Rates (Hz) (Note: Analog and/or digital)	Up to 2560x1600 @ 60Hz (DP) Up to 1920x1200 @ 60Hz (DVI & HDMI) Up to 2048x1536 @ 75Hz (VGA only)			
External Connectors	VGA, DisplayPort			
DisplayPort				
Bus Type	DDPC			
Maximum supported resolution	Up to 2560x1600 @ 60Hz			
Maximum power consumption	N/A			
External connectors	DisplayPort			

[1] Up to 1.7 GB of system memory may be allocated to support integrated graphics, depending on operating system, system memory size and other factors.
[2] DVI and VGA can be used concurrently for multi-monitor display in DOS. The DisplayPort controller does not support multi-monitor display in DOS

GRAPHICS/VIDEO CONTROLLER (CONT.)

1GB AMD RADEON™ HD6670	MT	DT	SFF
Bus Type (example integrated or PCIe x16)	PCIEx16		
GPU core clock	800Mhz		
Frame Buffer Memory (onboard and shared) Size and Speed	1000Mhz		
Maximum power consumption	68W		
Overlay Planes	Yes		
Maximum Color Depth	32-bit		
Maximum Vertical Refresh Rate	85Hz		
Multiple Display Support	Yes		
Operating Systems Graphics/ Video API Support	D3D and OpenGL		
Supported Resolutions and Max Refresh Rates (Hz) (Note: Analog and/or digital)	Dual-Link DVI: 2560 x 1600, 32-bit color DisplayPort: 2560 x 1600, 32-bit color VGA: 1920 x 1440, 32-bits color		
External connectors	DisplayPort, DVI-D, VGA		
Dimensions of full height card inches/centimeters (L x H)	6.6 x 4.7 / 16.764 x 12.0		
Dimensions of low profile card inches/centimeters (L x H)			
Environmental Operating Conditions (Non-Condensing):			
Operating Temperature Range	10°-50° C		
Relative Humidity Range	5-90% RH		
Altitude Range	0-20,000 ft.		

1GB AMD RADEON™ HD6450	MT	DT	SFF
Bus Type (example integrated or PCIe x16)	PCIEx16		
GPU core clock	625Mhz		
Frame Buffer Memory (onboard and shared) Size and Speed	800Mhz		
Maximum power consumption	20W		
Overlay Planes	Yes		
Maximum Color Depth	32-bit		
Maximum Vertical Refresh Rate	85Hz		
Multiple Display Support	Yes		
Operating Systems Graphics/ Video API Support	D3D and OpenGL		
Supported Resolutions and Max Refresh Rates (Hz) (Note: Analog and/or digital)	Dual-Link DVI Max: 2560 x 1600/32bpp @ 75Hz DispalyPort Max: 2560 x 1600/32bpp @ 75Hz VGA Max : 1920x1440/32bpp @ 75Hz Min : 640x480/8bpp @ 60Hz		
External connectors	1 DVI-I and 1 DisplayPort		
Dimensions of full height card inches/centimeters (L x H)	6.6 x 4.7 / 16.764 x 12.0		
Dimensions of low profile card inches/centimeters (L x H)		6.6 x 3.35 / 16.764 x 8.5	
Environmental Operating Conditions (Non-Condensing):			
Operating Temperature Range	10°-50° C		
Relative Humidity Range	5-90% RH		
Altitude Range	0-20,000 ft.		

GRAPHICS/VIDEO CONTROLLER (CONT.)

512MB AMD RADEON™ HD6350	MT	DT	SFF
Bus Type (example integrated or PCIe x16)	PCIEx16		
GPU core clock	650Mhz		
Frame Buffer Memory (onboard and shared) Size and Speed	800Mhz		
Maximum power consumption	20W		
Overlay Planes	Yes		
Maximum Color Depth	32-bit		
Maximum Vertical Refresh Rate	85Hz		
Multiple Display Support	Yes		
Operating Systems Graphics/ Video API Support	D3D and OpenGL		
Supported Resolutions and Max Refresh Rates (Hz) (Note: Analog and/or digital)	DVI Max : 1920x1200/32bpp @ 75Hz VGA Max: 1920x1440/32bpp @ 75Hz Min : 640x480/8bpp @ 60Hz		
External connectors	1 DMS59 (DVI x2 or VGA x2)		
Dimensions of full height card inches/centimeters (L x H)	6.6 x 2.731 / 16.764 x 6.936		
Dimensions of low profile card inches/centimeters (L x H)		6.6 x 2.731 / 16.764 x 6.936	
Environmental Operating Conditions (Non-Condensing):			
Operating Temperature Range	10°-50° C		
Relative Humidity Range	5-90% RH		
Altitude Range	0-20,000 ft.		

HARD DRIVES[1]

3.5" 1TB SATA 7200 RPM HDD	
Capacity (bytes)	1,000,204,886,016
Dimensions inches (W x D x H)	5.87 x 4 x 1
Interface type and Maximum speed	Up to 6Gb/s (SATA 3.0) Up to 3Gb/s (SATA 2.0)
Internal buffer size	32 MB
Average Seek Time	8.5 ms
Rotational Speed	7200 rpm
Logical Blocks	1,953,525,168
Power Source	
Power Consumption (reference only)	Idle 5.0W, Active 10.0W(running IOmeter utility)
Spin Up Current (reference only)	5V (1A) ,12V (2A)
Environmental Operating Conditions (Non-Condensing):	
Temperature Range	5^0C to 60^0C
Relative Humidity Range	20% to 80% non-condensing
Maximum Wet Bulb Temperature	29^0C
Altitude Range	-50 ft to 10000 ft
Environmental Non-Operating Conditions (Non-Condensing):	
Temperature Range	-40^0C to 65^0C
Relative Humidity Range	10% to 90% non-condensing
Maximum Wet Bulb Temperature	38^0C
Altitude Range	-50 ft to 35000 ft

[1] For hard drives, GB means 1 billion bytes ; actual capacity varies with preloaded material and operating environment and will be less.

HARD DRIVES[1] (CONT.)

3.5" 500GB SATA 7200 RPM HDD	
Capacity (bytes)	500,107,862,016
Dimensions inches (W x D x H)	5.87 x 4 x 1
Interface type and Maximum speed	Up to 6Gb/s (SATA 3.0) Up to 3Gb/s (SATA 2.0)
Internal buffer size	16 MB
Average Seek Time	8.5 ms
Rotational Speed	7200 rpm
Logical Blocks	976,773,168
Power Source	
Power Consumption (reference only)	Idle 5.0W, Active 10.0W(running IOmeter utility)
Spin Up Current (reference only)	5V (1A) ,12V (2A)
Environmental Operating Conditions (Non-Condensing):	
Temperature Range	5^0C to 60^0C
Relative Humidity Range	20% to 80% non-condensing
Maximum Wet Bulb Temperature	29^0C
Altitude Range	-50 ft to 10000 ft
Environmental Non-Operating Conditions (Non-Condensing):	
Temperature Range	-40^0C to 65^0C
Relative Humidity Range	10% to 90% non-condensing
Maximum Wet Bulb Temperature	38^0C
Altitude Range	-50 ft to 35000 ft

[1] For hard drives, GB means 1 billion bytes ; actual capacity varies with preloaded material and operating environment and will be less.

HARD DRIVES[1] (CONT.)

3.5" 320GB SATA 7200 RPM HDD	
Capacity (bytes)	320,072,933,376
Dimensions inches (W x D x H)	5.87 x 4 x 1
Interface type and Maximum speed	Up to 6Gb/s (SATA 3.0) Up to 3Gb/s (SATA 2.0)
Internal buffer size	16 MB
Average Seek Time	8.5 ms
Rotational Speed	7200 rpm
Logical Blocks	625,142,448
Power Source	
Power Consumption (reference only)	Idle 5.0W, Active 10.0W(running IOmeter utility)
Spin Up Current (reference only)	5V (1A) ,12V (2A)
Environmental Operating Conditions (Non-Condensing):	
Temperature Range	5^0C to 60^0C
Relative Humidity Range	20% to 80% non-condensing
Maximum Wet Bulb Temperature	29^0C
Altitude Range	-50 ft to 10000 ft
Environmental Non-Operating Conditions (Non-Condensing):	
Temperature Range	-40^0C to 65^0C
Relative Humidity Range	10% to 90% non-condensing
Maximum Wet Bulb Temperature	38^0C
Altitude Range	-50 ft to 35000 ft

[1] For hard drives, GB means 1 billion bytes ; actual capacity varies with preloaded material and operating environment and will be less.

HARD DRIVES[1] (CONT.)

3.5" 250GB SATA 7200 RPM HDD	
Capacity (bytes)	250,059,350,016
Dimensions inches (W x D x H)	5.87 x 4 x 1
Interface type and Maximum speed	Up to 6Gb/s (SATA 3.0) Up to 3Gb/s (SATA 2.0)
Internal buffer size	8 MB
Average Seek Time	8.5 ms
Rotational Speed	7200 rpm
Logical Blocks	488,397,168
Power Source	
Power Consumption (reference only)	Idle 5.0W, Active 10.0W(running IOmeter utility)
Spin Up Current (reference only)	5V (1A) ,12V (2A)
Environmental Operating Conditions (Non-Condensing):	
Temperature Range	5^0C to 60^0C
Relative Humidity Range	20% to 80% non-condensing
Maximum Wet Bulb Temperature	29^0C
Altitude Range	-50 ft to 10000 ft
Environmental Non-Operating Conditions (Non-Condensing):	
Temperature Range	-40^0C to 65^0C
Relative Humidity Range	10% to 90% non-condensing
Maximum Wet Bulb Temperature	38^0C
Altitude Range	-50 ft to 35000 ft

[1] For hard drives, GB means 1 billion bytes ; actual capacity varies with preloaded material and operating environment and will be less.

HARD DRIVES[1] (CONT.)

2.5" 128GB[1] SATA SOLID STATE DRIVE	
Capacity (bytes)	128,035,676,160
Dimensions inches (W x D x H)	3.94 x 2.75 x 0.374
Interface type and Maximum speed	Up to 6Gb/s (SATA 3.0) Up to 3Gb/s (SATA 2.0)
MTBF	1M hours
Average Seek Time	n/a
Logical Blocks	250,069,680
Power Source	
Power Consumption (reference only)	Idle 1W, Active 1.25W
Spin Up Current (reference only)	5V (1000mA)
Environmental Operating Conditions (Non-Condensing):	
Temperature Range	0°C to 70°C
Relative Humidity Range	10 to 90%
Maximum Wet Bulb Temperature	29°C
Altitude Range	-200 to 5,000 m
Op Shock (@0.5ms)	1,500G
Environmental Non-Operating Conditions (Non-Condensing):	
Temperature Range	-55°C to 95°C
Relative Humidity Range	5 to 95%
Maximum Wet Bulb Temperature	38°C
Altitude Range	-200 to 10,600 m

[1] For hard drives, GB means 1 billion bytes ; actual capacity varies with preloaded material and operating environment and will be less.

HARD DRIVES[1] (CONT.)

2.5" 500GB SATA 7200 RPM HYBRID HDD	
Capacity (bytes)	500,107,862,016
Dimensions inches (W x D x H)	Approximately (3.93 x 2.75 x 0.374 inches)
Interface type and Maximum speed	Up to 3Gb/s
Internal buffer size	16 MB
Average Seek Time	12 ms (Read)
Rotational Speed	7200 rpm
Logical Blocks	976,773,168
Power Source	
Power Consumption (reference only)	Idle 0.8W, Active 3.25W
Spin Up Current (reference only)	5V (1A)
Environmental Operating Conditions (Non-Condensing):	
Temperature Range	5^0C to 60^0C
Relative Humidity Range	20% to 80% non-condensing
Maximum Wet Bulb Temperature	29^0C
Altitude Range	-50 ft to 10000 ft
Environmental Non-Operating Conditions (Non-Condensing):	
Temperature Range	-40^0C to 65^0C
Relative Humidity Range	10% to 90% non-condensing
Maximum Wet Bulb Temperature	38^0C
Altitude Range	-50 ft to 35000 ft

[1] For hard drives, GB means 1 billion bytes ; actual capacity varies with preloaded material and operating environment and will be less.

HARD DRIVES[1] (CONT.)

NOTE: FIPS certified SED HDD will be made available in Q2 2011.

2.5" 320GB OPAL SED SATA HDD	
Capacity (bytes)	320,072,933,376
Dimensions inches (W x D x H)	5.87 x 4 x 1 (includes sled)
Interface type and Maximum speed	Up to 3Gb/s
Internal buffer size	16 MB
Average Seek Time	8.5 ms
Rotational Speed	7200 rpm
Logical Blocks	625,142,448
Power Source	
Power Consumption (reference only)	Idle 0.7W, Active 3.25W
Spin Up Current (reference only)	5V (1A)
Environmental Operating Conditions (Non-Condensing):	
Temperature Range	5^0C to 60^0C
Relative Humidity Range	20% to 80% non-condensing
Maximum Wet Bulb Temperature	29^0C
Altitude Range	-50 ft to 10000 ft
Environmental Non-Operating Conditions (Non-Condensing):	
Temperature Range	-40^0C to 65^0C
Relative Humidity Range	10% to 90% non-condensing
Maximum Wet Bulb Temperature	38^0C
Altitude Range	-50 ft to 35000 ft

[1] For hard drives, GB means 1 billion bytes ; actual capacity varies with preloaded material and operating environment and will be less.

HARD DRIVES[1] (CONT.)

2.5" 500GB SATA 7200 RPM HDD	
Capacity (bytes)	500,107,862,016
Dimensions inches (W x D x H)	Approximately (3.93 x 2.75 x 0.374 inches)
Interface type and Maximum speed	Up to 3Gb/s
Internal buffer size	16 MB
Average Seek Time	12 ms (Read)
Rotational Speed	7200 rpm
Logical Blocks	976,773,168
Power Source	
Power Consumption (reference only)	Idle 0.7W, Active 3.25W
Spin Up Current (reference only)	5V (1A)
Environmental Operating Conditions (Non-Condensing):	
Temperature Range	5^0C to 60^0C
Relative Humidity Range	20% to 80% non-condensing
Maximum Wet Bulb Temperature	29^0C
Altitude Range	-50 ft to 10000 ft
Environmental Non-Operating Conditions (Non-Condensing):	
Temperature Range	-40^0C to 65^0C
Relative Humidity Range	10% to 90% non-condensing
Maximum Wet Bulb Temperature	38^0C
Altitude Range	-50 ft to 35000 ft

[1] For hard drives, GB means 1 billion bytes ; actual capacity varies with preloaded material and operating environment and will be less.

HARD DRIVES[1] (CONT.)

2.5" 250GB SATA 7200 RPM HDD	
Capacity (bytes)	250,059,350,016
Dimensions inches (W x D x H)	Approximately (3.93 x 2.75 x 0.374 inches)
Interface type and Maximum speed	Up to 3Gb/s
Internal buffer size	16 MB
Average Seek Time	12 ms (Read)
Rotational Speed	7200 rpm
Logical Blocks	488,397,168
Power Source	
Power Consumption (reference only)	Idle 0.7W, Active 3.25W
Spin Up Current (reference only)	5V (1A)
Environmental Operating Conditions (Non-Condensing):	
Temperature Range	5^0C to 60^0C
Relative Humidity Range	10% to 90% non-condensing
Maximum Wet Bulb Temperature	29^0C
Altitude Range	-50 ft to 10000 ft
Environmental Non-Operating Conditions (Non-Condensing):	
Temperature Range	-40^0C to 65^0C
Relative Humidity Range	10% to 90% non-condensing
Maximum Wet Bulb Temperature	38^0C
Altitude Range	-50 ft to 35000 ft

[1] For hard drives, GB means 1 billion bytes ; actual capacity varies with preloaded material and operating environment and will be less.

OPTICAL DRIVES

DVD +/- RW[1]	MT	DT	SFF	USFF
External Dimensions inches/centimeters (Without Bezel – W x H x D)	148.2mm(6in)/42mm (2in)/ 190.5 (max)	148.2mm(6in)/42mm (2in)/ 190.5 (max)	128.0 mm (5.04)/ 12.7mm (0.5 in)/ 126.1mm (4.97in)	128.0 mm (5.04)/ 12.7mm (0.5 in)/ 126.1mm (4.97in)
Weight (max) pounds/ kilograms	800g	800g	170g	170g
Interface type and speed	SATA 1.5Gbit/s	SATA 1.5Gbit/s	SATA 1.5Gbit/s	SATA 1.5Gbit/s
Disc Capacity	Standard	Standard	Standard	Standard
Internal buffer size	supplier dependent	supplier dependent	supplier dependent	supplier dependent
Access Times (typical)	supplier dependent	supplier dependent	supplier dependent	supplier dependent
Maximum Data Transfer Rates				
Writes	16x DVD/48x CD	16x DVD/48x CD	8x DVD/ 24x CD	8x DVD / 24x CD
Reads	16x DVD/48x CD	16x DVD/48x CD	8x DVD/ 24x CD	8x DVD/ 24x CD
Power Source				
DC Power Requirements	12V, 5V	12V, 5V	5V	5V
DC Current	1200mA (12V)/ 900mA (5V)	1200mA (12V)/ 900mA (5V)	1000mA	1000mA
Environmental Operating Conditions (Non-Condensing):				
Operating Temperature Range	5C to 50C	5C to 50C	5C to 50C	5C to 50C
Relative Humidity Range	20% to 80% RH	20% to 80% RH	20% to 80% RH	20% to 80% RH
Maximum Wet Bulb Temperature	29C	29C	29C	29C
Altitude Range	-200 to 3048	-200 to 3048	-200 to 3048	-200 to 3048
Environmental Non-Operating Conditions (Non-Condensing):				
Operating Temperature Range	-40C to 65C	-40C to 65C	-40C to 65C	-40C to 65C
Relative Humidity Range	5% to 95% RH	5% to 95% RH	5% to 95% RH	5% to 95% RH
Maximum Wet Bulb Temperature	38C	38C	38C	38C
Altitude Range	-200 to 10600m	-200 to 10600m	-200 to 10600m	-200 to 10600m

[1] Discs burned with this drive may not be compatible with some existing drives and players; using DVD+R media provides maximum compatibility.

DVD-ROM	MT	DT	SFF	USFF
External Dimensions inches/centimeters (Without Bezel – W x H x D)	148.2mm(6in)/42mm (2in)/ 190.5 (max)	148.2mm(6in)/42mm (2in)/ 190.5 (max)	128.0 mm (5.04)/ 12.7mm (0.5 in)/ 126.1mm (4.97in)	128.0 mm (5.04)/ 12.7mm (0.5 in)/ 126.1mm (4.97in)
Weight (max) pounds/ kilograms	750g	750g	165g	165g
Interface type and speed	SATA 1.5Gbit/s	SATA 1.5Gbit/s	SATA 1.5Gbit/s	SATA 1.5Gbit/s
Disc Capacity	Standard	Standard	Standard	Standard
Internal buffer size	supplier dependent	supplier dependent	supplier dependent	supplier dependent
Access Times (typical)	supplier dependent	supplier dependent	supplier dependent	supplier dependent
Maximum Data Transfer Rates				
Writes	N/A	N/A	N/A	N/A
Reads	16x DVD/48x CD	16x DVD/48x CD	8x DVD/ 24x CD	8x DVD/ 24x CD

OPTICAL DRIVES (CONT.)

DVD-ROM (CONT.)	MT	DT	SFF	USFF
Power Source				
DC Power Requirements	12V, 5V	12V, 5V	5V	5V
DC Current	1200mA (12V)/ 900mA (5V)	1200mA (12V)/ 900mA (5V)	800mA	800mA
Environmental Operating Conditions (Non-Condensing):				
Operating Temperature Range	5C to 50C	5C to 50C	5C to 50C	5C to 50C
Relative Humidity Range	20% to 80% RH	20% to 80% RH	20% to 80% RH	20% to 80% RH
Maximum Wet Bulb Temperature	29C	29C	29C	29C
Altitude Range	-200 to 3048m	-200 to 3048m	-200 to 3048m	-200 to 3048m
Environmental Non-Operating Conditions (Non-Condensing):				
Operating Temperature Range	-40C to 65C	-40C to 65C	-40C to 65C	-40C to 65C
Relative Humidity Range	5% to 95% RH	5% to 95% RH	5% to 95% RH	5% to 95% RH
Maximum Wet Bulb Temperature	38C	38C	38C	38C
Altitude Range	-200 to 10600m	-200 to 10600m	-200 to 10600m	-200 to 10600m

OPTICAL DRIVES (CONT.)

BLU-RAY WRITER	MT	DT	SFF	USFF
External Dimensions inches/centimeters (Without Bezel – W x H x D)	148.2mm(6in)/42mm (2in)/ 190.5 (max)	148.2mm(6in)/42mm (2in)/ 190.5 (max)	128.0 mm (5.04in)/ 12.7mm (0.5 in)/ 126.1mm (4.97in)	128.0 mm (5.04in)/ 12.7mm (0.5 in)/ 126.1mm (4.97in)
Weight (max) pounds/ kilograms	750g	750g	165g	165g
Interface type and speed	SATA 1.5Gbit/s	SATA 1.5Gbit/s	SATA 1.5Gbit/s	SATA 1.5Gbit/s
Disc Capacity	Standard	Standard	Standard	Standard
Internal buffer size	supplier dependent	supplier dependent	supplier dependent	supplier dependent
Access Times (typical)	supplier dependent	supplier dependent	supplier dependent	supplier dependent
Maximum Data Transfer Rates				
Writes	6X BD/16x DVD/40x CD	6x BD/16x DVD/40x CD	6X BD/8x DVD/24x CD	6X BD/8x DVD/24x CD
Reads	8X BD/16x DVD/40x CD	8x BD/16x DVD/40x CD	6X BD/8x DVD/ 24x CD	6X BD/8x DVD/ 24x CD
Power Source				
DC Power Requirements	12V, 5V	12V, 5V	5V	5V
DC Current	1200mA (12V)/ 900mA (5V)	1200mA (12V)/ 900mA (5V)	900mA	900mA
Environmental Operating Conditions (Non-Condensing):				
Operating Temperature Range	5C to 50C	5C to 50C	5C to 50C	5C to 50C
Relative Humidity Range	20% to 80% RH	20% to 80% RH	20% to 80% RH	20% to 80% RH
Maximum Wet Bulb Temperature	29C	29C	29C	29C
Altitude Range	-200 to 3048m	-200 to 3048m	-200 to 3048m	-200 to 3048m
Environmental Non-Operating Conditions (Non-Condensing):				
Operating Temperature Range	-40C to 65C	-40C to 65C	-40C to 65C	-40C to 65C
Relative Humidity Range	5% to 95% RH	5% to 95% RH	5% to 95% RH	5% to 95% RH
Maximum Wet Bulb Temperature	38C	38C	38C	38C
Altitude Range	-200 to 10600m	-200 to 10600m	-200 to 10600m	-200 to 10600m

BIOS DEFAULTS

System Configuration	Integrated NIC:	Enable
	USB Controller:	Enable
	Serial Port:	COM1
	SATA Operation:	RAID On
	USB Controller:	Enable USB Controller
	SMART Reporting:	Disable
	Diskette Drive:	Enable
	Miscellaneous Devices:	Enable (Front USB, Rear Dual USB, Rear Quad USB, PCI Slot)
	Drives:	Enable (SATA-0, SATA-1, SATA-2, SATA-3)
Video	Primary Video:	Auto
Performance	Multiple Core Support:	All
	Intel® SpeedStep™:	Enable
	C States Control:	Disable
	Limit CPUID Value:	Enable
	HyperThread control:	Enable
Virtualization Support	Virtualization:	Enable
	VT for Direct I/O:	Disable
Security	Administrator Password:	Not set
	System Password:	Not set
	Password Changes:	Enable
	TPM Security:	Disable
	CPU XD Support:	Enable
	Computrace®:	Deactivate
Power Management	AC Recovery:	Power Off
	Auto On Time:	Disable
	Deep Sleep Control:	Disable
	Fan Control Override:	Disable
	Wake on LAN:	Disable
Maintenance	Service Tag:	Set by the factory
	Asset Tag:	Optional User Entry
	SERR Message:	Enable
	Numlock LED:	Enable
	USB Emulation:	Enable
	Keyboard Errors:	Enable
	POST HotKeys:	Enable
	Fast Boot:	Thorough

CHASSIS ENCLOSURE & VENTILATION REQUIREMENTS

ENCLOSURE VENTILATION

If your enclosure has doors, they need to be of a type that allows at least 30% airflow through the enclosure (front and back).

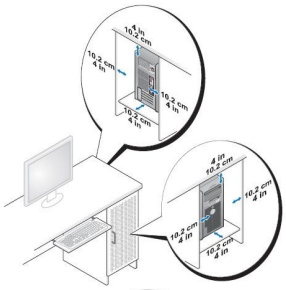

ENCLOSURE MINIMUM CLEARANCE

Leave a 10.2 cm (4 in.) minimum clearance on all vented sides of the computer to permit the airflow required for proper ventilation.

RECOMMENDED ENCLOSURE

Do not install your computer in an enclosure that does not allow airflow. This restricts the airflow and impacts your computer's performance, possibly causing it to overheat.

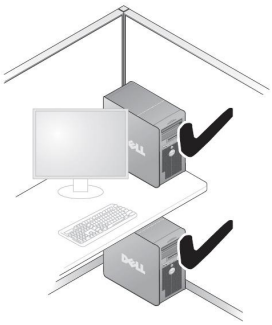

OPEN DESK MINIMUM CLEARANCE

If your computer is installed in a corner, on a desk, or under a desk, leave at least 5.1 cm (2 in.) clearance from the back of the computer to the wall to permit the airflow required for proper ventilation.

REGULATORY COMPLIANCE AND ENVIRONMENTAL

Product related conformity assessment and regulatory authorizations including Product Safety, Electromagnetic Compatibility (EMC), Ergonomics, and Communication Devices relevant to this product may be viewed at www.dell.com/regulatory_compliance. The Regulatory Datasheet for this product is located at http://www.dell.com/regulatory_compliance.

Details of Dell's environmental stewardship program to conserve product energy consumption, reduce or eliminate materials for disposal, prolong product life span and provide effective and convenient equipment recovery solutions may be viewed at www.dell.com/environment. Product related conformity assessment, regulatory authorizations, and information encompassing Environmental, Energy Consumption, Noise Emissions, Product Materials Information, Packaging, Batteries, and Recycling relevant to this product may be viewed by clicking the Design for Environment link on the webpage.

ENVIRONMENTAL ATTRIBUTES

	Reduce energy consumption, save money	Notes
	Energy efficient design: Allowing you compute more, and consume less. The Latitude Optiplex 990 has a 5.0 Energy Star® rating, which means it uses energy-efficient power supplies, operates efficiently in multiple modes (Off, Sleep and Idle), and has advanced power-management features enabled. This level of efficiency helps you save money and energy associated with the use of your product.	All configs
	Compare energy consumption with energy savings calculator: www.dell.com/energy	All configs
	Take control of your energy consumption: Includes Energy Smart Power Management Settings which allows you to configure your computer to ensure the greatest energy saving in Inactive mode.	All configs
	Reduce, Re-use, Recycle	
	Recycle responsibly and invest in peace of mind: Protect your company's sensitive data and recycle responsibly with the Dell Asset Recovery & Recycling Service. Find out how: http://content.dell.com/us/en/enterprise/services-asset-recovery-services.aspx?redirect=2	All configs
	Protect developing countries from e-waste exports: Because responsible recycling matters to you, it matters to us. In 2009, Dell was the first in the industry to ban the export of nonworking electronics or electronic waste (e-waste) to developing countries. Learn more: http://content.dell.com/us/en/corp/d/corp-comm/e-waste.aspx	All configs
	Eco-responsible packaging	
	Molded paper pulp packaging (where available): Making it easier to choose products with eco-responsible packaging, this product is cradled in our innovative molded paper pulp packaging. We know that responsible sourcing is important to you, so our pulp is made with 100% news print or recycled cardboard that is sourced near manufacturing operations to the reduce carbon footprint of shipping.	SFF configs only - regional disclaimer: only available in US, Canada and Malaysia
	Recycled packaging: Helping you to avoid sending unnecessary waste to landfills, this products ships with expanded polyethylene cushion packaging material which has a high percentage of recycled content (20% in APJ, 25% in EMEA and 65% in Americas). Using recycled materials encourages waste reduction and the conservation of resources.	All configs except SFF
	Shipped in recycled materials: To help you reduce waste and reuse potentially useful materials, this product's packaging is made with up to 25% recycled post consumer cardboard	All configs
	Reduce packaging waste: Dell is implementing a plan to simplify and revolutionize computer packaging that will result in the elimination of approximately 20 million pounds of packaging materials from 2008 through 2012. Find out more: http://content.dell.com/us/en/corp/d/corp-comm/earth-products-packaging.aspx	All configs
	Environmentally Preferable Ingredients	
	Finding better ingredients: Making it easy for you to reduce your environmental impact, the Optiplex 990 enclosure plastics are built with 10% Post Consumer Recycled Content. It also has reduced levels of environmentally sensitive materials such as mercury and arsenic and can be configured to be completely free of BFR/PVC. This is one of Dell's most environmentally friendly products.	BFR/PVC free configurations
	Meets or exceeds world-wide environmental standards: WW EU RoHS (Lead free), China RoHS and REACH compliant.	All configs
Eco- Participation	EPEAT US/Canada/France , Energy Star, TCO, Blue Angel Learn more about Eco-Labels at http://content.dell.com/us/en/corp/d/corp-comm/dell-green-product-certifications.aspx	

ACOUSTIC NOISE EMISSION INFORMATION

OPTIPLEX 990 MT

Component	Typical Configuration	High-end Configuration
CPU	Intel i3,3.3GHZ,2c SNB 65W	Intel i5,3.1GHZ , 4c SNB 95W
Memory	2G DDR3 1333MHz	2G DDR3 1333MHz(x2)
HDD (#, capacity)	250G 7200RPM SATA2	500G 7200RPM SATA2(x2)
RMSD	16X DVD+/-RW SATA HH	16X DVD+/-RW SATA HH
Graphics Adapter	Intel® HD Graphics Family	ATI Radeon HD 6350

The Declared Noise Emission in accordance with ISO 9296 for the Dell OptiPlex 990 MT is as follows:
(all values L_{WAd} expressed in bels; 1 bel=10 decibels, re 10^{-12} Watts)

Operating Mode	Typical Configuration Declared Sound Power (L_{WAd})	High-end Configuration Declared Sound Power (L_{WAd})
Idle	3.7	3.9
HDD Operating	3.9	3.9
90% CPU	3.8	4.0
ODD Operating	5.1	5.1

The Declared A-weighted Sound Pressure Level in decibels (re $2x10^{-5}$ Pa), at Operator, Bystander, and Desk Side Positions are measured in accordance with ISO 7779 7.6.1, 7.6.2, and C.15.2 and declared in accordance with ISO 9296 for this product is as follows[1]:

Operating Mode	Typical Configuration Declared Sound Pressure (LpA)				High-end Configuration Declared Sound Pressure (LpA)			
	Table-Top		Floor-Standing		Table-Top		Floor- Standing	
	Operator Position (LpA)	Bystander Position (LpA)	Operator Position (LpA)	Bystander Position (LpA)	Operator Position (LpA)	Bystander Position (LpA)	Operator Position (LpA)	Bystander Position (LpA)
Idle	26.5	24.2	21.0	21.2	26.8	24.3	20.9	21.4
HDD Operating	26.7	24.9	21.1	20.9	26.8	23.9	21.8	21.4
90% CPU	26.7	24.8	21.6	21.3	30.0	26.3	22.4	22.0
ODD Operating	39.7	35.8	36.6	36.1	40.7	36.0	35.4	33.5

[1] All tests are conducted according to ISO 7779 and declared according to ISO 9296 except 90% CPU. For this mode, the system CPU was stressed at 90% utilization with no other peripheral device actively seeking. This test mode is not specified in ISO 7779, but was measured using the same microphone distances and measurement techniques defined for the other reported operating modes.
[2] Declared Sound Power rounded to nearest tenth of a bel per ISO 9296 section 4.4.2

ACOUSTIC NOISE EMISSION INFORMATION

OPTIPLEX 990 DT

Component	**Typical Configuration**	**High-end Configuration**
CPU	Intel I3,3.3GHZ,2c SNB 65W	Intel I5,3.1GHZ ,4c SNB 95W
Memory	2G DDR3 1333MHz	2G DDR3 1333MHz(x2)
HDD (#, capacity)	250G 7200RPM SATA2	500G 7200RPM SATA2
RMSD	16X DVD+/-RW SATA HH	16X DVD+/-RW SATA HH
Graphics Adapter	Intel® HD Graphics Family	ATI Radeon HD 6350

The Declared Noise Emission in accordance with ISO 9296 for the Dell OptiPlex 990 DT is as follows:
(all values L_{WAd} expressed in bels; 1 bel=10 decibels, re 10^{-12} Watts)

Operating Mode	Typical Configuration Declared Sound Power (L_{WAd})	High-end Configuration Declared Sound Power (L_{WAd})
Idle	3.7	3.7
HDD Operating	3.6	3.8
90% CPU	4.1	4.4
ODD Operating	5.1	5.1

The Declared A-weighted Sound Pressure Level in decibels (re $2x10^{-5}$ Pa), at Operator, Bystander, and Desk Side Positions are measured in accordance with ISO 7779 7.6.1, 7.6.2, and C.15.2 and declared in accordance with ISO 9296 for this product is as follows[1]:

Operating Mode	**Typical Configuration Declared Sound Pressure (LpA)**				**High-end Configuration Declared Sound Pressure (LpA)**			
	Table-Top		**Floor-Standing**		**Table-Top**		**Floor- Standing**	
	Operator Position (LpA)	**Bystander Position (LpA)**	**Operator Position (LpA)**	**Bystander Position (LpA)**	**Operator Position (LpA)**	**Bystander Position (LpA)**	**Operator Position (LpA)**	**Bystander Position (LpA)**
Idle	24.6	20.7	20.5	19.5	24.9	22.5	21.0	20.9
HDD Operating	24.9	21.2	20.7	19.8	24.2	21.8	21.0	20.9
90% CPU	29.4	24.1	20.8	21.3	33.4	30.7	27.1	26.2
ODD Operating	42.2	36.8	35.1	34.7	41.2	37.2	35.5	33.5

[1] All tests are conducted according to ISO 7779 and declared according to ISO 9296 except 90% CPU. For this mode, the system CPU was stressed at 90% utilization with no other peripheral device actively seeking. This test mode is not specified in ISO 7779, but was measured using the same microphone distances and measurement techniques defined for the other reported operating modes.
[2] Declared Sound Power rounded to nearest tenth of a bel per ISO 9296 section 4.4.2

ACOUSTIC NOISE EMISSION INFORMATION

OPTIPLEX 990 SFF

Component	Typical Configuration	High-end Configuration
CPU	Intel I3,3.3GHZ,2c SNB,65W	Intel I5,3.1GHZ ,4c SNB 95W
Memory	2G DDR3 1333MHz	2G DDR3 1333MHz(x2)
HDD (#, capacity)	250G 7200RPM SATA2	500G 7200RPM SATA2
RMSD	16X DVD+/-RW SATA HH	16X DVD+/-RW SATA HH
Graphics Adapter	Intel® HD Graphics Family	ATI Radeon HD 6350

The Declared Noise Emission in accordance with ISO 9296 for the Dell OptiPlex 990 SFF is as follows:
(all values L_{WAd} expressed in bels; 1 bel=10 decibels, re 10^{-12} Watts)

Operating Mode	Typical Configuration Declared Sound Power (L_{WAd})	High-end Configuration Declared Sound Power (L_{WAd})
Idle	3.6	3.9
HDD Operating	3.6	4.0
90% CPU	3.9	4.3
ODD Operating	4.6	4.6

The Declared A-weighted Sound Pressure Level in decibels (re $2x10^{-5}$ Pa), at Operator, Bystander, and Desk Side Positions are measured in accordance with ISO 7779 7.6.1, 7.6.2, and C.15.2 and declared in accordance with ISO 9296 for this product is as follows[1]:

Operating Mode	Typical Configuration Declared Sound Pressure (LpA)				High-end Configuration Declared Sound Pressure (LpA)			
	Table-Top		Floor-Standing		Table-Top		Floor- Standing	
	Operator Position (LpA)	Bystander Position (LpA)	Operator Position (LpA)	Bystander Position (LpA)	Operator Position (LpA)	Bystander Position (LpA)	Operator Position (LpA)	Bystander Position (LpA)
Idle	25.3	21.6	19.6	18.6	29.4	25.8	22.1	21.4
HDD Operating	24.7	20.5	20.6	19.9	29.3	25.4	22.7	20.6
90% CPU	28.9	24.2	21.0	21.0	32.9	28.1	27.5	26.5
ODD Operating	36.9	30.6	29.5	27.7	38.0	32.4	33.2	29.6

[1] All tests are conducted according to ISO 7779 and declared according to ISO 9296 except 90% CPU. For this mode, the system CPU was stressed at 90% utilization with no other peripheral device actively seeking. This test mode is not specified in ISO 7779, but was measured using the same microphone distances and measurement techniques defined for the other reported operating modes.
[2] Declared Sound Power rounded to nearest tenth of a bel per ISO 9296 section 4.4.2

ACOUSTIC NOISE EMISSION INFORMATION

OPTIPLEX 990 USFF

Component	**Typical Configuration**
CPU	Intel l3,3.3GHZ,2c SNB 65W
Memory	1G DDR3 1333MHz
HDD (#, capacity)	250G 7200RPM SATA2
RMSD	8X 12.7 SATA DVDRW
Graphics Adapter	Intel® HD Graphics Family

The Declared Noise Emission in accordance with ISO 9296 for the Dell OptiPlex 990 USFF is as follows:
(all values L_{WAd} expressed in bels; 1 bel=10 decibels, re 10^{-12} Watts)

Operating Mode	**Typical Configuration Declared Sound Power (L_{WAd})**
Idle	3.7
HDD Operating	3.7
90% CPU	4.3
ODD Operating	4.7

The Declared A-weighted Sound Pressure Level in decibels (re $2x10^{-5}$ Pa), at Operator, Bystander, and Desk Side Positions are measured in accordance with ISO 7779 7.6.1, 7.6.2, and C.15.2 and declared in accordance with ISO 9296 for this product is as follows[1]:

Operating Mode	**Typical Configuration Declared Sound Pressure (LpA)**			
	Table-Top		**Floor-Standing**	
	Operator Position (LpA)	**Bystander Position (LpA)**	**Operator Position (LpA)**	**Bystander Position (LpA)**
Idle	29.8	27.5	22.3	21.6
HDD Operating	30.8	29.2	21.9	21.5
90% CPU	36.3	34.9	26.4	25.0
ODD Operating	39.3	34.7	31.6	29.3

[1] All tests are conducted according to ISO 7779 and declared according to ISO 9296 except 90% CPU. For this mode, the system CPU was stressed at 90% utilization with no other peripheral device actively seeking. This test mode is not specified in ISO 7779, but was measured using the same microphone distances and measurement techniques defined for the other reported operating modes.
[2] Declared Sound Power rounded to nearest tenth of a bel per ISO 9296 section 4.4.2