Dell™ P2714H

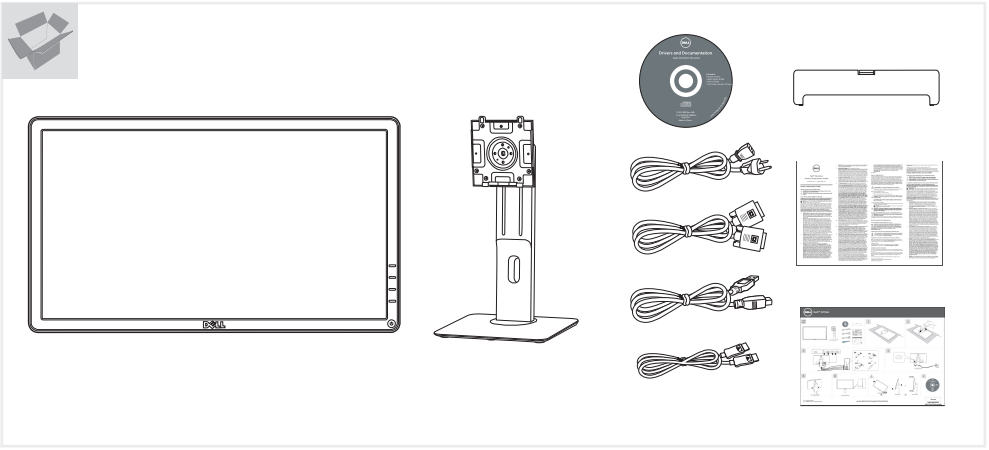

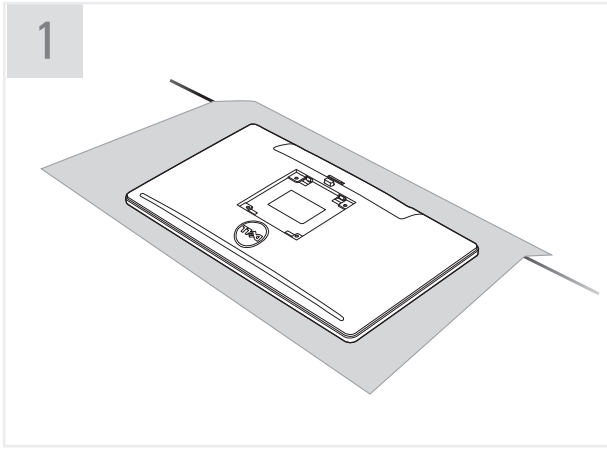

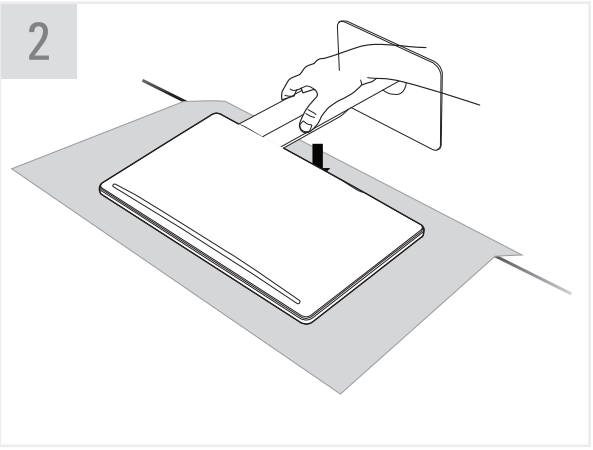

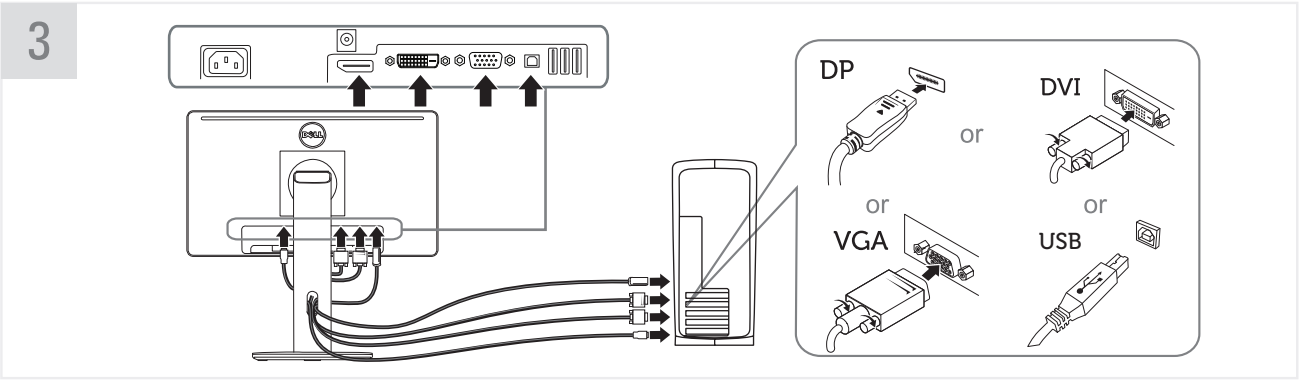

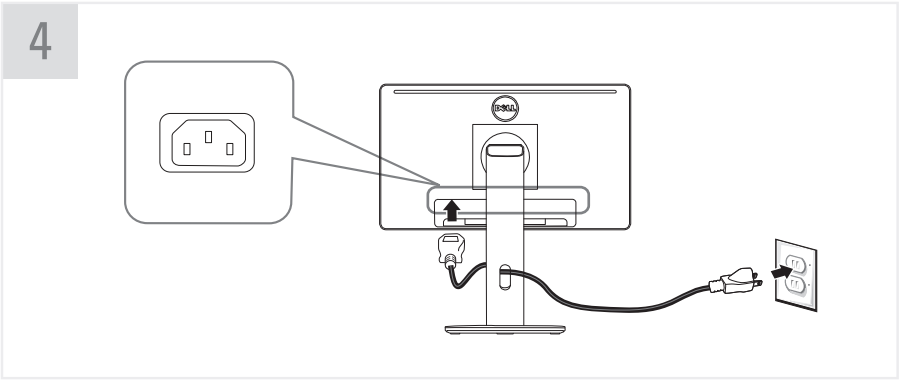

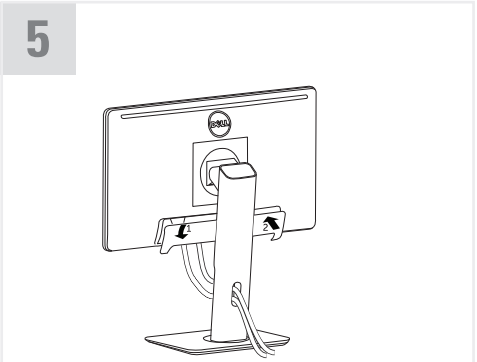

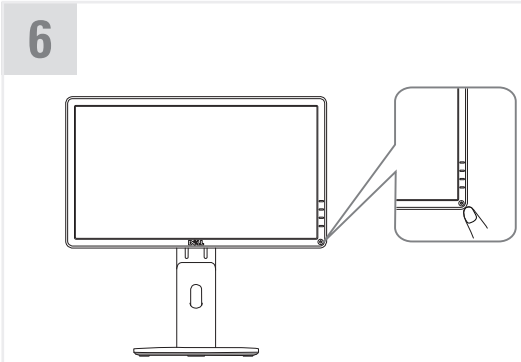

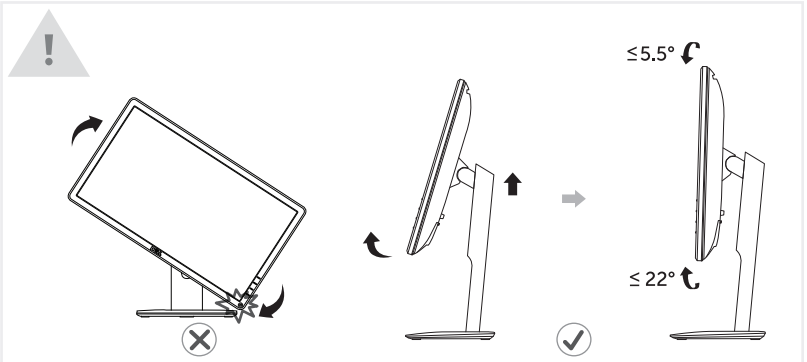

Printed in China.
© 2013 Dell Inc. All rights reserved.

www.dell.com/support/monitors

Q41G78S170033A
(DELL P/N:9TF4N rev.A00)